Addendum No. 1

for

Belt Filter Press Replacement Project

City of Iowa City
Iowa City, Iowa

I hereby certify that this engineering document was prepared by me or under my direct personal supervision and that I am a duly licensed Professional Engineer under the laws of the State of Iowa.

Jay M. Brady

Jay M. Brady 10/6/2017
(signature) (date)

Discipline: Civil Engineer, Iowa License No. 13153

License expires December 31, 2018.

Pages or sheets covered by this seal: Addendum No. 1

I hereby certify that this engineering document was prepared by me or under my direct personal supervision and that I am a duly licensed Professional Engineer under the laws of the State of Iowa.

Jon J. Bovenkamp

J. J. B. 10/6/17
(signature) (date)

Discipline: Mechanical Engineer, Iowa License No. 15551

License expires December 31, 2018.

Pages or sheets covered by this seal: Addendum No. 1

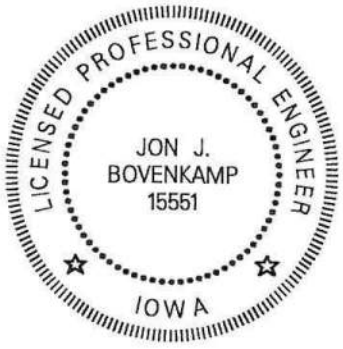

Stanley Consultants INC.

A Stanley Group Company
Engineering, Environmental and Construction Services - Worldwide

Stanley Consultants INC.

ADDENDUM NO. 1
October 5, 2017

BELT FILTER PRESS AND PUMP REPLACEMENTS
WASTEWATER TREATMENT FACILITY

CITY OF IOWA CITY
IOWA CITY, IOWA

1. DOCUMENT – NOTICE TO BIDDERS

Change proposal date to 11 A.M. on the 12th day of October 2017.

Change the limitations to read as follows:

The following limitations shall apply to this Project:
Milestone 1 Date: Issue PO to Charter Machine Company with 5 days of NTP.
Milestone 2 Date: February 28, 2018.
Substantial Completion Date: June 1, 2018
Specified Completion Date: June 29, 2018
Specified Start Date: November 2, 2017
Liquidated Damages: $500 per day.

2. DOCUMENT – FORM OF AGREEMENT

Replace Form of Agreement in its entirety with Form of Agreement, Revision 1.

3. SECTION 01 20 00 – PRICE AND PAYMENT PROCEDURES

Article "1.01 – CASH ALLOWANCES"

Change subparagraph A.,1 to read:

1. Section 46 76 21 – Belt Filter Presses: Include stipulated sum of $742,200 for purchase, delivery, and start-up of equipment specified inclusive of manufacturer's services.

Add subparagraph A., 2 to read:

2. Include stipulated sum of $56,500 for system integrator identified in Section 40 96 15 with corresponding scope of services in Exhibit A.

Change paragraph B. to read:

1. Costs included in cash allowances: Cost of product to Contractor or Subcontractor, less applicable trade discounts; delivery to site, applicable taxes, and manufacturer's services.

4. SECTION 20 05 13 – COMMON WORK RESULTS FOR FACILITY SYSTEMS PIPING

Delete page 8 in its entirety and insert attached page 8, Rev. 1 and page 9, Rev. 1, in its place

5. SECTION 20 05 29 – SUPPORTS AND ANCHORS FOR FACILITY SERVICES PIPING AND EQUIPMENT

Insert new Article 1.03:

1.03 MEASUREMENT AND PAYMENT

A. Include replacement of up to 50 clevis hangers in bid.
B. Include replacement of up to 75 pipe rack support up to 2 feet wide in bid.

6. SECTION 20 07 00 – MECHANICAL INSULATION

Article “3.05 PIPE INSULATION SCHEDULE”

Change paragraph C. to read:

C. Piping insulation application schedule:

Service	Insulation	Field Applied Jacket	Thickness
Potable Hot Water Piping (140ºF)	Mineral Fiber Cellular Glass Elastomeric	PVC	M-1008
Potable Cold Water Piping (45ºF)	Mineral Fiber Cellular Glass Elastomeric	PVC	1/2” (13 mm)
Heating Water Piping (180ºF)	Mineral Fiber Cellular Glass Elastomeric	PVC	M-1008
Roof Drain Piping (20ºF) Odor System Drain Piping	Cellular Glass Elastomeric	PVC	1/2” (13 mm)

7. SECTION 22 30 00 – PLUMBING EQUIPMENT

Add Section 22 30 00, pages 1 through 2, attached hereto.

8. SECTION 23 31 00 – HVAC DUCTS AND CASINGS

Article "2.02 FIBERGLASS REINFORCED PLASTIC (FRP) DUCTWORK"

Change paragraph H. to read:

H. Manufacturer: Monoxivent; Spunstrand, Inc. Perry Fiberglass, or equal.

9. SECTION 23 34 00 – HVAC FANS

Article “2.01 MANUFACTURERS”

Add paragraph G. to read:

G. Penn Berry.

10. SECTION 23 37 00 – AIR OUTLETS AND INLETS

Add Section 23 37 00, pages 1 through 3, attached hereto.

11. SECTION 43 21 53 – SLUDGE PUMPS

Article “1.05 MAINTENANCE MATERIALS”

Delete subparagraph A., 7.

Article “2.02 ROTARY LOBE PUMPS”

Change subparagraph D., 2 to read:

2. Rated operating point: 250 gpm (16 lps) at 55 ft (17m) TDH.

Change subparagraph E., 1 to read:

1. Ductile or cast iron core tri-lobe spiral-type rotors, covered with urethane or Buna-N having Durometer hardness 65-72.

Change subparagraph E., 3. to read:

3. Shaft: AISI 4140 or 4340 HT carbon steel.

Add subparagraph E. 6. to read:

6. Pump stand: Fabricated galvanized steel.

Add the following language at the end of paragraph G:

G. . . . .Hinged and reversible end covers are acceptable.

Change paragraph H to read:

H. Rear of pump casing and front cover shall be protected with hardened replaceable wear plates.

Change paragraph K to read:

K. Shaft construction: The shafts shall be non-sludge-wetted. The rotor/shaft connection shall be lubricated with quench fluid of the intermediate chamber.

Add the following language at the end of paragraph L:

L. . . . .The oil-filled intermediate chamber shall be vented to the atmosphere to relieve pressure to room in event sludge side seal fails. Alternately air gap between the pump casing and pump gearbox shall be provided.”

Add the following language at the end of paragraph M:

M. . . . .Pump manufacturer shall supply baseplate stand of suitable height with adjustable feet to facilitate installation.

Add paragraph N. to read:

N. Mechanical Seal Leakage Monitoring System: Provide conductivity probe monitoring system to detect leakage through mechanical seal into the oil-filled intermediate chamber. Probe shall be mounted in threaded port to the intermediate chamber.
   1. Probe: Conductive Level Sensor
   2. Suitable for Class I, Division 2 space.
   3. Case; 1.4305 Stainless steel.
   4. Electrode insulation: PTFE.

5. Seal: FPM.
6. Maximum Pressure: 10 bar (145 PSI).
7. Submergence: 2 bar (50 ft)
8. Maximum Operating Temperature: 100°C.
9. Process Thread: G3/8A.
10. Cable Connection: Rubber insulated communication cable 10 meters in length.
11. Provide output signal to plant SCADA:
    a. Limit Switch Relay: E&H; Nivotester FTW 325.
    b. Input: 2 channel

Change paragraph O. to read:

O. Pump discharge pressure switch: Provide pump isolation ring pressure switch on each pump discharge line.
1. Pressure switch shall be suitable for Class I, Division 2 space.
2. Initial pressure switch setting: 100 psi.
3. Flexible Liner: Buna-N, Teflon, Viton, Natural Rubber, EPDM suitable for anaerobically digested sludge.
4. Flange and Body Material: 316L stainless steel.
5. Fill Fluid: Fill isolation ring assembly with pressure transmitting fluid chemically compatible with all wetted materials and process mediate in its intended service. Factory fill ring to prevent air entrainment inside of the system.
6. Isolation rings bearing multiple instruments shall be fitted using 316L schedule 80 components arranged to minimize fill fluid volume and temperature error.
7. Equip isolation ring with pressure switch for transmission of pressure measurements to SCADA via 4-2mA signal and a local pressure gauge.
8. Aschcroft Type 80/81/82 or Equal.

12. SECTION 44 31 16 – ACTIVATED CARBON ADSORPTION ODOR CONTROL EQUIPMENT

Delete Section 44 31 16 in its entirety. Replace with Section 44 31 16, Rev 1, pages 1 through 7.

13. SECTION 46 33 46 – PROGRESSING CAVITY METERING PUMPS

Article “2.03 PROGRESSING CAVITY PUMP”

Change paragraph C to read:

C. Quantity: 4.

14. SECTION 46 79 21 - BELT FILTER PRESSES

Delete both Sections 46 76 21 in their entirety. Replace with Section 46 76 21, pages 1 through 1.

15. ADD EXHIBIT A – SYSTEM INTEGRATOR SCOPE OF SERVICES

16. ADD EXHIBIT B – CHARTER MACHINE PRELIMINARY SHOP DRAWINGS (FOR INFORMATION ONLY)

17. DRAWINGS

The following Drawings have been revised, as indicated by revision number, and are reissued herewith:

Drawing No.	Title	Rev. No.
G1	Cover and Vicinity Map	1
G2	Index	1
D2	Mechanical and Electrical Demolition Plan and Elevation	1
M3	Belt Filter Press – General Arrangement	1
M4	Belt Filter Press - Sections	1
M10	Digester Building Mechanical Plan and Sections	1

Add the following new Drawings, which are issued herewith:

Drawing No.	Title	Rev. No.
M11	Sludge Processing Facility Partial HVAC Plan	0

The following drawing revisions are not being issued as new drawings.

Drawing C1

Add General Note 6 to read: "6. Vary odor control unit equipment pad plan dimensions to suit equipment provided."

Drawing S3

Add General Note 6 to read: "6. Vary odor control unit equipment pad plan dimensions to suit equipment provided."

Drawing S4

Section C-S4/S3 – add call out for dowels "#4@12 down with 6" embed and epoxy grout – shift as needed to miss blockouts

Drawing S4

Section D-S4/S3 – add call out for dowels "#4@12 down with 6" embed and epoxy grout – shift as needed to miss blockouts

Drawing M6

Revise callout at Dwg coordinate E2 to read "Relocate existing unit heaters, gas piping, compressed air piping, domestic water, sodium hypochlorite piping, and electrical devices to accommodate new odor control duct. Reuse existing flue locations."

Drawing M9

General Note 1 – modify to read "1. Retain suction side plug valve and operator (TYP of 3).

Drawing E4

Change General Note 3 to read "3. New roof-mounted exhaust fan on existing roof curb."

END OF ADDENDUM NO. 1

1) J. M. Brady

FORM OF AGREEMENT

THIS AGREEMENT is made and entered into by and between the City of Iowa City, Iowa ("City"), and _____ ("Contractor").

WHEREAS the City has prepared certain Plans, Specifications, Proposal and Contract dated the 30th day of August, 2017, for the Wastewater Belt Filter Press Replacement Project ("Project"), and

WHEREAS, Contractor submitted a bid on the Project described in said Plans, Specifications, Proposal and Contract; and

WHEREAS, the parties hereto now wish to enter into this agreement for the construction of said Project.

NOW, THEREFORE, IT IS AGREED:

1. The Contractor hereby agrees to perform the Project for the sums listed in its Form of Proposal including the total extended amount of $_____, which sums are incorporated herein by this reference.

2. Contract Times:

   a. The Work will be substantially completed on or before June 1, 2018, and completed and ready for final payment in accordance with paragraph 15.06 of the General Conditions on or before June 29, 2018.

   b. Milestones. Parts of the Work shall be substantially completed on or before the following Milestone(s):

      Milestone 1: Issue purchase order to Charter Machine Company for belt filter press procurement within 5 days of the Notice to Proceed.

      Milestone 2: Installation and start-up of 1st belt filter press completed on or before February 28, 2018.

   c. Liquidated Damages. Contractor and Owner recognize that time is of the essence as stated in Paragraph 4.1 above and that Owner will suffer financial and other losses if the Work is not completed and Milestones not achieved within the times specified in Paragraph 4.2 above, plus any extensions thereof allowed in accordance with the Contract. The parties also recognize the delays, expense, and difficulties involved in proving in a legal or arbitration proceeding the actual loss suffered by Owner if the Work is not completed on time.

Accordingly, instead of requiring any such proof, Owner and Contractor agree that as liquidated damages for delay (but not as a penalty):

Substantial Completion: Contractor shall pay Owner $500 for each day that expires after the time (as duly adjusted pursuant to the Contract) specified in Paragraph 4.2 above for Substantial Completion until the Work is substantially complete.

Completion of Remaining Work: After Substantial Completion, if Contractor shall neglect, refuse, or fail to complete the remaining Work within the Contract Time (as duly adjusted pursuant to the Contract) for completion and readiness for final payment, Contractor shall pay Owner $500 for each day that expires after such time until the Work is completed and ready for final payment.

Liquidated damages for failing to timely attain Substantial Completion and final completion are not additive and will not be imposed concurrently.

Milestones: Contractor shall pay Owner $500 for each day that expires after the duration (as duly adjusted pursuant to the Contract) specified above for achievement of each Milestones, until each Milestone is achieved.

3. This Agreement consists of the following additional component parts which are incorporated herein by reference:

   a. Addenda Numbers _____, attached hereto;

   b. "Standard Specifications for Highway and Bridge Construction," Series of 2015, Iowa Department of Transportation, as amended;

   c. Plans;

   d. Technical Specifications and Supplementary Conditions;

   e. Performance and Payment Bond;

   f. Contractor’s Completed Bidder Status Form; attached hereto;

   g. Contractor’s Completed Assurance of Contract Compliance Program (Anti-Discrimination Requirements), attached hereto;

   h. Completed Form of Proposal; and

   i. This Instrument.

The above components are deemed complementary and should be read together. In the event of a discrepancy or inconsistency, the more specific provision shall prevail.

3. The names of subcontractors acknowledged by City, together with quantities, unit prices, and extended dollar amounts, are as follows (or shown on an attachment):

Name:	Quantity:	Unit Price:	$ Amnt:

DATED this _____ day of _____, 20____.

City

By _____
Mayor

ATTEST:

_____
City Clerk

Contractor

By _____

(Title) _____

ATTEST: _____

(Title) _____
(Company Official)

Approved By:

_____
City Attorney's Office

Service	Pipe Description	Piping Class Specification [1]	Design Temp. (°F)	Operating Temp. (°F)	Design Pressure (psig)	Operating Pressure (psig)	Test Pressure (psig)	Testing Method [2]
	ASTM F876 PEX	APE5						
4" and larger								
	ASTM B88 Hard Drawn Copper	ACU1						
	AWWA C151/A21.51 Cement-lined Ductile Iron	ADI1						
Heating Water:			180	150	125	75	188	Hydrostatic
	ASTM A53 Gr. B Steel	ACS6						
Natural Gas and Propane								
	ASTM A53 Gr. B Steel	ACS6						
	ASTM A240/ANSI LC1 Corrugated Stainless Steel tubing	ASS3						
Drain Piping Including Sanitary Drains, Sewers, Vents, Stacks, Storm Drains, Plenum Drains, and Coil Condensate Drains:								
2" and smaller:								
	ASTM B306 Hard-Drawn Copper	ACU4						
	ASTM A53 Gr. B Galvanized Steel	AGS3						
	ASTM A888 No-Hub Cast Iron	ACI2						
	ASTM D2665 DWV PVC (Do not use PVC above suspended ceiling or in air plenums)	APV1						
2-1/2" and larger								
	ASTM A888 No-Hub Cast Iron	ACI2						
	ASTM A53 Gr. B Galvanized Steel	AGS3						
	ASTM B88 Hard Drawn copper	ACU4						
	ASTM D2665 DWV PVC (Do not use PVC above suspended ceiling or in air plenums)	APV1						

Notes:
(1) Where multiple Pipe Class Specifications are specified, selection of material is at Contractor's option.
(2) Testing in accordance with ASME B31 unless noted otherwise.

END OF SECTION

1) J. J. Bovenkamp

PART 1 GENERAL

1.01 SECTION INCLUDES

A. Drains.

1.02 INFORMATIONAL SUBMITTALS

A. Product Data:
1. Include appropriate identification, model number, dimensions, materials of construction, connection locations and sizes, options, and wiring diagrams.
2. Manufacturer's installation instructions and maintenance manuals.

B. Quality assurance data: Backflow preventer test reports.

1.03 QUALITY ASSURANCE

A. Comply with applicable requirements of state and local plumbing codes, and any other governmental agency under whose jurisdiction Work is being performed.

B. Pressure vessels shall carry ASME stamp where required by Code.

C. Natural gas and electric controls shall be UL-approved.

D. Exposed piping and fittings in finished areas: Chromium-plated brass with polished finish.

E. Throughout Project, use products of same manufacturer to greatest extent possible.

F. Throughout project, use products of same manufacturer to greatest extent possible. Refer to Section 01 60 00.

1.04 DELIVERY STORAGE AND HANDLING

A. During delivery and storage, handle equipment to prevent damage, denting, or scoring.

B. Store equipment and components in clean dry place. Protect from weather, dirt, water, construction debris, and physical damage in accordance with the manufacturer’s instructions.

PART 2 PRODUCTS

2.01 DESIGN REQUIREMENTS

A. Coordinate drain outlets with joint types allowed by each pipe class specification. In general compression type outlets are acceptable for below grade outlets and no-hub type outlets are acceptable for above grade outlets.

B. Drains shall have bottom outlet unless noted otherwise.

2.02 ROOF DRAIN

A. Designation on Drawings: RD-1.
1. Description: Coated cast-iron body with nonpuncturing flashing clamp with, integral gravel stop.
2. Strainer: Large cast-iron beehive locking dome-type.
3. Size: As shown on Drawings.
4. Provide Under deck clamp for securing drain to roof deck.
5. Manufacturer: Wade W-3200, or equal by Josam or Jay R. Smith.

PART 3 EXECUTION

3.01 INSTALLATION

A. Slope drainage lines 1/4” (6 mm) per foot for pipes less than 4” (100 mm) in diameter and 1/8” (3 mm) per foot for pipes 4” (100 mm) in diameter and larger, unless shown otherwise on Drawings.

B. Install drains in floors and roofs. Minimum of 1/2” (13 mm) below finished level.

END OF SECTION

1) J. J. Bovenkamp

PART 1 GENERAL

1.01 SECTION INCLUDES

A. Diffusers, registers, and grilles:
1. Supply grilles.
2. Return, exhaust, and transfer grilles.

1.02 INFORMATIONAL SUBMITTALS

A. Product Data:
1. Catalog data showing selection and options.
2. Manufacturer's installation Instructions.

B. Shop Drawings:
1. Dimension drawings.
2. Schedules.
3. Airflow capacities.
4. Sound ratings.
5. Material of construction.
6. Finishes.
7. Tag numbers.

1.03 CLOSEOUT SUBMITTALS

A. Operation and maintenance data.

1.04 QUALITY ASSURANCE

A. Wherever possible, provide product of same manufacturer throughout.

B. Grilles, registers, and diffusers shall be rated in accordance with ANSI/ASHRAE 70 (latest edition) Method of Testing for Rating the Performance of Air Outlets and Inlets.

C. Refer to Sections 01 25 13 and 01 60 00 for product delivery, storage, handling, and procedures for substitution of manufacturers not named.

1.05 PROJECT CONDITIONS

A. Review requirements of outlets with regards to size, finish, and type of mounting prior to submitting Shop Drawings and schedules of outlets.

B. Check location of outlets and make necessary adjustments in position to conform to architectural features, symmetry, and lighting arrangement.

PART 2 PRODUCTS

2.01 ACCEPTABLE MANUFACTURERS

A. Diffusers, registers, and grilles:
1. Tuttle & Bailey.
2. Titus.
3. Price Industries.
4. Krueger.
5. Trane.
6. MetalAire.
7. Nailor Industries.

B. Provide products from manufacturers named above. Refer to Section 01 25 13 for substitution requirements.

2.02 DIFFUSERS, REGISTERS, AND GRILLES

A. Supply grilles and registers:
1. Designation on Drawings: SG.
2. Type: Rectangular, double deflection, 1-1/4” margin, and 2/3” or 3/4" blade spacing.
3. Construction:
a. Materials: Extruded aluminum.
b. Individually adjustable horizontal and vertical blades.
c. Front blades horizontal, rear blades vertical.
4. Size: As noted on Drawings.
5. Frame: Suitable for ceiling, wall, or duct mounting.
6. Finish: Satin anodized.
7. Accessories:
a. Mounting frame.
8. Performance: As scheduled on Drawings for maximum NC value and maximum static pressure drop. Where NC level and static pressure are not scheduled, maximum NC level shall be 30 and maximum static pressure drop shall be 0.05 in. w.g.
9. Manufacturer: Tuttle & Bailey A54.

B. Return, exhaust, grilles:
1. Designation on Drawings: RG, EG.
2. Type: Rectangular, horizontal 42° deflection blades, 1-1/4” margin, 2/3” or 3/4" blade spacing.
3. Size: As noted on Drawings.
4. Frame: Suitable for mounting in wall, ceiling, or duct.
5. Materials of construction: Extruded aluminum.
6. Finish: Baked white enamel.
7. Accessories:
a. Mounting frame.
8. Performance: As scheduled on Drawings for maximum NC value and maximum static pressure drop. Where NC level and static pressure drop are not scheduled, maximum NC shall be 30, and maximum static pressure drop shall be 0.05” w.g.
9. Manufacturer: Tuttle and Bailey A70D.

PART 3 EXECUTION

3.01 INSTALLATION – DIFFUSERS, REGISTERS, AND GRILLES

A. Coordinate with other Work including architectural work, ceiling layout, and duct and duct accessories to interface installation of diffusers, register, and grilles properly with other work.

B. Install in location indicated on Drawings.

C. Install in accordance with manufacturer's printed instructions.

D. At each drop or takeoff to individual diffusers, registers, or grilles, locate accessible splitter damper or extractor plus separate accessible volume damper independent of volume dampers integral with diffuser, register, or grille.

E. Adjust diffuser, register, or grille air pattern to provide draft-less uniform air distribution.

F. Blank off unused portions of diffusers and grilles.

G. For duct-mounted grilles or registers, provide transition between ductwork and inlet.

H. Support grilles and diffusers independently of ceiling hardware.

I. Mount with blades arranged to limit visibility through diffuser, register, or grille.

J. In finished spaces, paint inside of duct with flat black paint to reduce visibility.

3.02 FIELD QUALITY CONTROL

A. Test and operate installed outlets and inlets to demonstrate compliance with Specifications.

3.03 AIR OUTLET AND INLET SCHEDULE

A. See Schedule on Drawings.

END OF SECTION

1) J. J. Bovenkamp

PART 1 GENERAL

1.01 SECTION INCLUDES

A. Dual Media Odor Control Scrubber System.

B. Scrubber Blower System.

1.02 INFORMATIONAL SUBMITTALS

A. Product Data:
1. Characteristic performance curves for blowers, showing total dynamic head, and brake horsepower plotted against capacity in scfm.
2. Motor data.
3. Control panel information including wiring diagrams.
4. Identification of manufacturer and manufacturer's representative to which unit responsibility is assigned.
5. Manufacturer's information, including catalog data, performance curves and tables, specification sheets and product literature that shows equipment meets specified performance and design criteria and operating conditions.
6. Calculations demonstrating the media selection appropriateness.

B. Quality assurance data: Written warranty.

1.03 ACTION SUBMITTALS

A. Shop Drawings showing equipment, dimensions, materials, weights, motor, and connection provisions for ducting and electrical power.

B. Performance curve showing flow, TDH, blower speed, and horsepower.

C. Manufacturer’s written performance guarantee.

D. Performance test results.

1.04 CLOSEOUT SUBMITTALS

A. Operation and maintenance information in accordance with requirements of Section 01 78 23.

1.05 QUALITY ASSURANCE

A. Qualifications:
1. Manufacturer engaged primarily in design and fabrication of single and dual dry media odor control systems for wastewater service for at least the last 10 years.
2. Minimum of 50 similar units installed and operating successfully in U.S.

B. The manufacturer shall be a single source provider of equipment, media, and testing services. Re-sellers of equipment and media will not be accepted.

C. The manufacturer shall have local, factory-trained representatives.

1.06 SITE CONDITIONS

A. Equipment shall be located outdoors at wastewater treatment plant with low concentrations of background atmospheric hydrogen sulfide and ammonia.

B. Outdoor air characteristics:
   1. Temperature: -20ºF to 105ºF.
   2. Relative humidity: 30% to 100%.

1.07 WARRANTY

A. Guarantee completely installed system for 2 years following final acceptance with a warranty against defects in workmanship and materials. Warranty shall be limited to parts and labor for necessary repairs within warranty period.

B. Repairs shall be made within 60 days after manufacturer is notified of defect.

C. Normal maintenance items not covered by warranty.

PART 2 PRODUCTS

2.01 MANUFACTURERS

A. Purafil.

B. BioAir.

C. Integrity.

D. ECS

E. Or Engineer Approved equal.

2.02 SYSTEM REQUIREMENTS

A. Provide complete odor scrubber system consisting of:
   1. Blower system to remove air from room ducting and pressurize for flow through scrubber system.
   2. Transitional plenum from 36’ (1 m) round duct to scrubber system connection.
   3. Dual dry media and housing.
   4. Pre-filter.
   5. Discharge stack with inline silencer, rain hood and bird screen.
   6. Sound Enclosure.
   7. 316 ss grounding rod one (1) per vessel.
   8. Control/instrumentation/motor starter panel.
   9. Ancillary devices necessary for complete and operational system.

B. Performance
   1. The media and unit must be capable of removing a minimum of 99.5% of up to 5 ppm H2S, and up to 2 ppm of methyl mercaptans. In the event inlet concentrations are low, removal to 0.05 ppmv will be accepted as satisfactory performance.
   2. The physical media is required to last for 3 years before exhausted.

C. Sizing
   1. Adequate media with capacity to remove average loading concentrations of 1 ppm H2Sand 1 ppm methyl mercaptans for a period not less than 3 years when operated up to 15 hours per day, five days per week shall be provided. Average ammonia concentrations are anticipated to be less than 4 ppm. Ammonia removal is not required to be removed beyond incidental adsorption.
   2. System shall be of adequate size for 9500 scfm air rate at approximately 9.55 inches of water column inclusive of prefilter, final filter, media, and external duct system losses.
   3. System shall be a 3-pass unit using dual media mix or a dual bed system with layered media.
   4. Design airflow face velocity shall be 100 ft/min.
   5. Overall width of system cannot exceed 12’-6”.

D. Arrangement
   1. The unit shall be arranged for horizontal airflow through vertically oriented, separate media beds. The media beds shall be arranged in series to assure maximum contaminant removal efficiency. The system shall be a draw through design with the motor and blower enclosed inside the unit
   2. Alternately, provide vertical airflow dual bed system with layered media optimized for system efficiency and exhaustion at approximately the same rate.
   3. The unit shall be equipped with gasketed side access ports for servicing of components.
   4. The unit shall shall contain media sampling ports located on each media bed; these shall extrude from the unit approximately 2" (51 mm) outward from the bed on both sides of the unit. The ports shall be located in the center of the media bed and shall be covered with a PVC cap.
   5. Standard 4" (102 mm) vacuum truck ports shall be located at bottom of media bed.
   6. Grating shall be located on top of unit at all locations where fill ports are not located.
   7. Unit Access
      a. Provide OSHA approved aluminum or FRP ladder with cage at inlet plenum area.
      b. Railing shall be provided around all top area with a section that can be disconnected for media loading only if required for media change outs.
      c. Manufacturer is responsible for insuring ladder and railings are compliant with regulations
   8. Discharge stack shall be provided at outlet with rain hood and bird screen.
   9. Inlet transition shall be provided from the mist eliminator to the contractor's duct connection. The contractor is responsible for all incoming ductwork.

2.03 Materials

A. The Deep Bed Scrubber housing shall be fabricated of aluminum or fiberglass.

B. The unit shall be provided with side access hatches and gaskets for servicing of components. Stainless steel latches shall have a positive locking action and shall include an encapsulated standard steel shaft if required for the system design and media exchange. Alternately provide hold-downs for connection to concrete pad embedded anchors.

C. All hinges shall be constructed of stainless steel.

D. Housing materials shall be weatherproof and suitable for outdoor operation.

E. Unit shall come fully assembled and shipped on a 3" (76 mm) aluminum skid base.

F. Aluminum name plate shall be provided, permanently riveted to the unit. Nameplate shall be engraved with the scrubber type, order number and serial number.

2.04 Pre-filter

A. Unit to be designed to accommodate a medium efficiency (30%) pleated particulate filter with high service life.

B. Hinged access doors with gaskets shall allow for the filter to be replaced.

C. Pressure taps and gages shall be installed to permit a local read out of the pre-filter pressure drop.

2.05 Blower Section

A. Unit to be furnished with a 20 Hp, 3-phase 460V, 60 Hz TEFC motor and blower with a fixed V belt drive and airfoil wheel to assure even, quiet airflow at a rate of 9,500 cfm.

B. The Deep Bed Scrubber shall contain an enclosed blower assembly for outdoor operation and sound attenuation.

C. Provide a minimum of 30" (762 mm) for service clearance at blower assembly.

D. Equip blower with condensate drain port.

2.06 Motor Starter/Control Panel

A. NEMA 4X, 316 stainless steel enclosure.

B. Motor starter: FVNR, ATL, with overload heaters, NEMA sized for 20 hp, 460 VAC, 3 phase motor.

C. Control power transformer, 460/120 VAC, with fused primary and secondary.

D. Main circuit breaker, magnetic, with front-panel operating handle.

E. Operator interface and display:
   1. “Hand-Off-Auto” selector switch.
   2. Indicating lamps (all lamps are push-to-test style):
      a. “Fan Off”.
      b. “Fan Running”.

F. Control panel shall communicate with plant SCADA system via Ethernet.
   1. Blower motor shall start and stop in when selector switch is in Auto based on signals from SCADA system.
   2. Panel shall report blower motor status to SCADA.
   3. Panel shall provide common alarm signal to SCADA for scrubber system alarms.

2.07 Instrumentation

A. Differential Pressure: A gage shall be included with the scrubber to permit local read-out of pressure drop through the prefilter and media. The gauge shall be a 0-3” as manufactured by Dwyer. Unit shall ship separately and shall be field mounted by contractor.

B. Gauges to be Magnehelic type

2.08 Outlet Silencer

A. The system shall be provided with a silencer on each exhaust stack.

B. This package shall consist a circular silencer with outer casing of aluminum or fiberglass.

C. Circular silencers shall be made of not less than 22 gauge aluminum or equivalent fiberglass and properly stiffened to ensure structural integrity.

D. Acoustically absorptive fill except for reactive (no media) silencers shall be inorganic glass fiber of a proper density to obtain the specified acoustic performance and be packed under not less than 5% compression to eliminate voids due to vibration and settling. Material shall be inert, vermin and moisture proof and impart no odor to the airstream and bagged in fiberglass cloth including acoustic spacer.

E. Interior partitions for circular silencers shall be secured with galvanized steel radial mounting brackets welded to the partition and the outer silencer casing. The radial brackets shall be installed full length and at 120 degree angles to each other to assure uniform spacing for consistent aerodynamic and acoustic performance.

F. Mounting and support silencer with proper guide wires, supports, etc.

2.09 Media Bed Section

A. The media bed section shall include three (3) 12” (308 mm) deep beds.

B. The 1st and 2nd pass of media shall be Odorcarb Ultra and the 3rd pass shall be Odormix SP media or equivalent medias selected and configured to meet the removal efficiency requirements and media life guarantee herein.

C. Alternately the medias bed section shall include two (2) beds with layered media. Layered media shall be selected and configured to ensure exhaustion rate of both media types are approximately the same.

D. Each media bed shall be contained between separate FRP, stainless steel, or aluminum corrosion resistant support grids and perforated sheet metal to provide media support while imposing a minimum resistance to airflow.

E. For horizontal flow systems, the media containment sections shall be separated to assure filling and removal of individual beds as required. New media shall be poured in bulk into the top of the unit through access hatches and shall be filled a minimum of 7" (178 mm) above the bed to prevent airflow bypass. Spent media shall be vacuumed from the bottom of the unit through standard 4" (102 mm) vacuum ports.

F. A minimum of 72" (1828 mm) of service clearance are recommended in order to sample the media beds from sample ports.

2.10 Media

A. Medias specified herein are based on Purafil. Equivalent medias from alternate suppliers can be proposed.

B. Odorcarb Ultra Media
1. The Odorcarb Ultra Media shall consist of manufactured, generally spherical porous pellets. The pellets shall be formed from a combination of powered activated carbon, alumina, and other and proprietary chemicals to enhance the capacity for removal of odorous gases. The pellets shall also chemically react to produce solid reaction products within the media.
2. Odorcarb Ultra Media shall have the following physical properties:
   a. Moisture content: 35% maximum.
   b. Average crush strength: 35% minimum - 70% maximum.
   c. Average abrasion: 4.5 maximum.
   d. Bulk density: 40 lbs/ft3 (0.64 g/cc) +5%.
   e. Nominal pellet diameter: 1/16" – 1/8" (1.587 mm).
   f. H2S Removal Capacity: 0.3g/cc.
   g. Removes 18.8lbs of H2S per cubic foot minimum.
3. Odorcarb Ultra Media shall be UL Classified Class 2.
4. Odorcarb Ultra Media shall be capable of absorbing and removing odorous gases throughout the entire pellet.

C. Odoroxidant SP Media
1. Odoroxidant SP Media shall be manufactured of generally spherical, porous pellets formed from a combination of powdered activated alumina and other binders, suitably impregnated with potassium permanganate to provide optimum adsorption, absorption, and oxidation of a wide variety of gaseous contaminants. The potassium permanganate shall be applied during pellet formation, such as the impregnant is uniformly distributed throughout the pellet volume and is totally available for reaction.
1. Odoroxidant SP Media
   a. Moisture content: 35% maximum.
   b. Average crush strength: 35% minimum - 70% maximum.
   c. Average abrasion: 4.5% maximum.
   d. Bulk density: 50 lbs/ft3 (0.8 g/cc) +5%.
   e. Nominal pellet diameter: 1/16" (1.587 mm).
   f. Sodium permanganate content: 12% minimum.

D. Odorkol Media
   1. Odorkol Media shall be a premium grade, activated carbon with a high surface area available for adsorption.
      a. Moisture content: 5.0% maximum.
      b. CTC: 55 minimum.
      c. Base material: activated carbon.
      d. Bulk density: 30-32 lbs/ft3 (0.48-0.51 g/cc) +5%.

E. Odormix SP Media
   1. The Odormix SP Media shall consist of an equal mix (by volume) of Purafil ESD's Odoroxidant SP Media and Odorkol.
   2. Odormix SP media shall be UL Classified Class 1.

F. Media must be Non-Hazardous before and after it is spent.

G. Only UL certified media will be accepted in this aluminum vessel with companies that contain additional product liability on their systems. Companies lacking this liability and UL certification will not be accepted. Strictly Carbon medias will not be accepted due to their frequent ability to for bed fires.

H. The manufacturer must open their facilities to the engineer and owner at any time during production of the media and equipment.

PART 3 EXECUTION

3.01 INSTALLATION

A. Refer to Section 01 73 19.

3.02 MANUFACTURER'S FIELD SERVICES

A. Provide inspection and testing by service representative as specified in Section 01 43 33.

B. Describe installation to Contractor.

C. Inspect and accept installation for compliance with warranty requirements.

D. Direct and witness equipment testing prior to plant startup.

E. Test equipment to show it can achieve performance and design requirements specified.

F. Prepare testing report.

3.03 Acceptance

A. Satisfactory installation, operation and performance of the required test shall be the basis of acceptance of the equipment.

B. While taking a gas concentration from the dry media scrubber outlet, if the hydrogen sulfide, methyl mercaptans, other tested gas concentration exceeds 10 ppb the system shall not be accepted.

C. If moisture or air flow is less that the design throughout the entire test period the unit shall also not be accepted.

D. Should the equipment not be accepted on initial testing, the manufacturer shall have the opportunity to adjust or modify the equipment and operating conditions.

E. The additional testing shall be performed at no expense to the Owner.

F. If modifications or adjustments are made which would affect the air flow design rate, the air handing system (fan, drive, etc.) shall be modified or replaced accordingly to maintain the air flow design rate.

G. Should the installed equipment not meet the performance specifications upon re-testing, the Contractor shall remove the installed equipment and replace it with equipment which meets the specifications at no cost to the Owner. The Contractor shall make all necessary supporting systems changes in order to provide a properly installed operating system.

H. No time extension shall be guaranteed for testing, re-testing, modifications or replacement of equipment.

3.04 Report

A. A summary report shall be prepared for the media performance testing and the performance testing and submitted by the Contractor to the Engineer for review and acceptance.

B. The report shall include a one page executive summary, description of test protocol, table of results showing airflow, inlet air results, and outlet air results.

3.05 Analytical Services

A. The manufacturer shall, after start up, provide lab analysis service to predict the remaining life style of the media. free of charge

B. Such service shall be provided at the manufacturer’s expense for a period of ten years:
   1. Quarterly for the 1st year.
   2. Semi-annual for years 2 thru 10..

C. The manufacturer shall be able to provide in-house lab analysis of the equipment media predicting the remaining life cycle of the media. Alternately service can be provided by certified 3rd party. Such service shall be provided at the manufacturer’s expense.

D. Such service shall be provided at the manufacturer's expense for a period of at least ten years.

END OF SECTION

1) J.M. Brady

PART 1 GENERAL

1.01 SECTION INCLUDES

A. This section is provided to the Contractor to allow understanding of what is to be provided under the CASH ALLOWANCE section for purchasing the Belt Filter Presses and ancillary equipment. The CONTRACTOR shall use this along with discussions with CHARTER (BFP supplier) to prepare the installation bid and providing and installing any additional necessary ancillary equipment, piping and work for a complete and operable system.

B. Continuous belt filter press equipment for nominal 2-meter belt filter presses as specified and required to provide a complete and operating system for dewatering temperature-phased (Thermophilic-Mesophilic) anaerobically digested sludge.

C. Digested sludge is a combination of primary sludge and secondary sludge from a liquid treatment process that at times experiences enhanced biological phosphorus removal.

1.02 SUBMITTALS

A. Product Data:
   1. Manufacturer's literature, illustrations, specifications and engineering data including: general arrangement, outline drawings, dimensions, size, weight, foundation loadings performance data, and motor horsepower.
   2. Control description and I/O list for all equipment provided by belt filter press manufacturer.
   3. Hydraulic belt tensioning system, if provided, including manufacturer literature and oil flow rate, pressure, and type requirements.
   4. Motor size and model number.
   5. Control panel dimensions.

B. Shop Drawings:
   1. Drawings showing entire belt filter press assembly, including material list and description of all components, structural members, auxiliary items and devices.
   2. Details of any additional equipment, structural items, and devices required to conform to available space (Reference: paragraph 2.02).
   3. Recommended platform layout for accessing critical components of equipment.
   4. For all motors, data including type, size and model number; assembly drawings, operations and maintenance manual, rated size of motors with calculations supporting selected motor size, temperature rating.
   5. Complete control panel and local control panel details, wiring diagrams showing all electrical connections to motors and variable speed controls, and logic diagrams.
   6. Control diagrams and process and instrumentation diagrams relating to submitted equipment.
   7. Drawing and catalog information detailing all control devices in control cabinets as well as overall panel layout interconnection diagrams and construction.
   8. Detailed installation drawings, showing size and location of all equipment, piping, electrical, instrumentation and structural connections.
   9. Setting drawings, templates, and directions for installation of anchor bolts and other anchorages.
   10. Anchor bolt requirements for cast-in-place construction.

C. Calculations certified by a professional engineer registered in Iowa, documenting structural design of frame and rollers per requirements specified. Calculations shall be submitted within two weeks of contract award.

D. Written report of field test results.

E. Proposed on-site testing and start-up procedures.

F. Training course outline and proposed class materials.

1.03 CLOSEOUT SUBMITTALS

A. Operating and maintenance information for proposed equipment.

B. Extended warranty

C. Installation list.

D. Certificate of Unit Responsibility attesting that manufacturer accepts unit responsibility in accordance with requirements of this Section. No other submittal material will be reviewed until certificate has been received and found to be in conformance with these requirements. Format shall be as provided in Form A.

E. Training Certification as specified within 30 days of training.

F. Affidavit as specified prior to contract completion.

1.04 MAINTENANCE MATERIALS

A. One set of any tools required for servicing belt filter presses shall be provided. In addition, following spare parts shall be provided:
   1. Two complete sets, replacement belts (The belts shall not be provided until a period of time after start up, to allow evaluation of performance of installed belts.)
   2. Two complete sets of doctor blades including all fasteners, brackets and appurtenances necessary for mounting on press frame
   3. Cams, if used, for doctor blades
   4. Gravity, wedge and shower box seals
   5. One complete set, water spray nozzles
   6. One bearing of each size and type used on each machine and subassembly
   7. One complete set, all belt positioning and tensioning devices

B. Spare parts shall be protected, labeled, and boxed. Special tools shall be Proto, or equal, with name of Owner engraved on each. Tools shall be furnished in a painted metal mechanic's toolbox fitted with a lock hasp. The words "Belt Filter Press Tools" and name of Owner shall be neatly stenciled on cover.

C. Furnish a list of additional recommended spare parts for an operating period of one year. This list shall describe each part, quantity recommended, and unit price of part.

D. Furnish oil and grease required for initial operation. Products shall be as recommended by manufacturer.

1.05 DELIVERY, STORAGE AND HANDLING

A. Deliver materials to Site to ensure uninterrupted progress of work.

B. Provide storage instructions for equipment.

C. Boxes, crates and packages will be inspected upon delivery. Damage components shall be replaced or repaired in accordance with manufacturer's instructions at no additional cost to Owner.

1.06 QUALITY ASSURANCE

A. manufacturer qualifications:
   1. Minimum of 5 years’ experience in design and fabrication of belt filter presses for sludge dewatering in wastewater treatment plants.

2. able to demonstrate a minimum of 10 installations within United States in wastewater applications similar to that herein specified. At minimum five of installations shall have been in operation for a minimum of five years.
3. A summary of required installations shall be submitted including:
   a. Location installed.
   b. Contact information of end user.
   c. Year installed.
   d. Number of units and belt width.
   e. Type of sludge dewatered (e.g. primary, secondary, combination, digested, etc.).

B. Obtain all equipment included in this Section regardless of component manufacturer from a single belt filter press manufacturer.

C. Unit responsibility:
1. The unit responsibility as specified is assigned to belt filter press manufacturer for equipment specified in this section. A certificate of unit responsibility shall be provided.
2. The unit responsibility manufacturer shall coordinate selection, coordinate design, and shall provide all mechanical equipment assembly components such that all equipment components furnished under specification for equipment assembly, and all equipment components specified elsewhere but referenced in this specification, is compatible and operates reliably and properly to achieve specified performance requirements. Agents, representatives or other entities that are not a direct division of driven equipment manufacturing corporation shall not be accepted as a substitute for driven equipment manufacturer in meeting this requirement.

1.07 ENVIRONMENTAL CONDITIONS

A. The sludge filter press will be located in Sludge Processing Facility in a ventilated room as specified. The press will be floor mounted above center drainage sump. The press will be subjected to frequent hosedown for cleaning purposes. The temperatures within press room may be expected to range between 40 and 100 degrees F; relative humidity will range between 50 and 100 percent.

B. It may be expected material discharged to each press will be in an actively digesting state, and small quantities of digester gas may be present. The gas is expected to contain methane in concentrations of up to 70 percent, with remainder comprised of principally carbon dioxide with up to 2000 parts per million dissolved hydrogen sulfide and trace quantities of nitrogen. While it is very unlikely explosive concentrations of methane will be present in room atmosphere, manufacturer is advised that corrosive agents (moisture, hydrogen sulfide gas, sulfuric acid, etc.) will be present at all times. Accordingly, materials shall be selected to provide appropriate resistance to corrosion and every effort shall be exercised in manufacture of equipment to eliminate crevices, unsealed overlapping plates and similar inaccessible areas where corrosion can take place without allowing access for application of preventive measures.

C. Controls: The press, along with associated sludge and polymer pumps, will be operated at a variable rate to optimize combinations of feed rate, polymer addition and belt speed for various conditions of sludge concentration, organic/inorganic solids percentage and other characteristics. Control for feed pumps and polymer pumps will be by plant SCADA system.

D. Utility services:
1. Water for belt cleaning sprays will be strained plant effluent water. The water pressure at press will range from 85 to 135 pounds per square inch. Water consumption shall not exceed 120 gallons per minute. Water for cleaning sprays will be strained plant effluent, which is expected to contain up to 10 mg/l chlorine, small quantities of biological floc and dilute concentrations of industrial solvents.
2. Polymer, in diluted solution form, will be pumped to press polymer/sludge mixing section by a variable speed, positive displacement pump.
3. Power for motors will be provided at 480 volts AC, 60 Hz, 3 phase. The maximum recommended belt speed for performance in accordance with paragraphs 1.02 Extended Limited Warranty shall correspond to operation of drive motor at 480 volts AC, 60 Hz.

E. Applied solids:
   1. Anaerobically digested primary and waste sludge from treatment process will be pumped to press by dedicated, variable speed positive displacement feedstock pump. The ratio of primary to secondary solids is expected to vary between 0.75 and 1.5. The sludge is expected to contain quantities of industrial wastes including solvents, petroleum products, grit, hair, rags, grease, plastic and rubber goods, and organic solids in concentrations ranging from 1.5 to 5 percent. The filter press will be routinely operated with an inlet solids concentration of 1 to 2 percent.
   2. Sludge delivered to press will have a temperature of 55 to 100 degrees F and will have a pH which may range from 5 to 8.

1.08 WARRANTY

A. Manufacturer of belt press shall provide an extended warranty for Owner. The warranty shall cover troubleshooting investigations, repair and replacement of parts due to defective materials or workmanship for durations listed below following date of Substantial Completion. Provide a certificate from belt press manufacturer which defines conditions and terms of warranty as outlined below. All costs for extended warranty shall be included in manufacturer's bid. The manufacturer's certificate of extended warranty for belt filter press equipment shall include following:

B. Warrant frame and coating for a period of three years from date of Substantial Completion. Any defects or corrosion occurring within warranty period shall be repaired or replaced, at no additional cost to Owner.

C. Warrant rollers and coating to be free from manufacturing defects for a period of three years from date of Substantial Completion. Neither rollers nor coating shall require preventive maintenance during warranty period. The warranty shall include all parts and labor and shall cover cost of repairing or replacing any item that fails during warranty period, provided damage is not due to misuse or neglect by others.

D. Warrant complete bearing assembly, as specified herein, for a period of five years from date of Substantial Completion. The warranty shall include all parts and labor for repairing or replacing any bearing assembly part that fails during warranty period.

E. Belt Life Guarantee: manufacturer shall guarantee that belt life of each belt furnished will not be less than 4,500 hours. Belts not providing this wearability under normal usage shall be replaced. Belts providing less than 2,000 hours shall be replaced at no additional cost to Owner. Belts providing more than 2,000 hours will be paid for by Owner on a pro rata basis.

PART 2 PRODUCTS

2.01 MANUFACTURER

A. Charter Machine Company.

2.02 SYSTEM DESCRIPTION

A. The belt filter press shall be specifically designed for wastewater sludge service and shall be of continuous belt design with three distinct dewatering sections: gravity drainage, wedge compression, and roll pressurization, to yield cake solids concentration required under this section. Equipment employing other types of dewatering sections or combinations of dewatering sections other than those specified will not be accepted. Equipment utilizing prethickening devices such as added gravity belts, rotary prethickeners, or other such devices will also not be accepted.

B. The machine shall be of type which, in wedge and roll pressurization zones, entrains sludge between no more than two continuous open meshed belts with a system of rollers and belt tensioning devices acting on rollers exclusively to provide ever increasing pressure as sludge advances toward discharge point of machine. The gravity section may utilize a separate belt.

C. Equipment provided under this specification shall be of industrial type, specifically designed for dewatering of anaerobically digested sludge from a municipal wastewater treatment plant.

2.03 DESIGN REQUIREMENTS

A. Design requirements of unit specified shall be understood to establish minimum requirements only. The equipment, when installed and operating, shall meet or exceed specified minimum performance requirements.

B. Design in accordance with:
1. Minimum overall belt width, meters: 2.2.
2. Minimum effective filtration areas, square feet: 140 total.
3. Gravity zone: 65. Area determined on basis of only area supported by belt support grid.
4. Wedge zone: 38. Area determined on basis of only lower belt area supported by belt support grid.
5. High pressure zone: As needed to meet performance requirements.

C. Design to accommodate solids up to and including 5/8 inch in any dimension without jamming, clogging, or overflow. The press shall be designed for continuous operation under conditions set forth in this section.

D. Configure to afford an unimpeded view of sludge in gravity dewatering section.

E. Design belt filter presses for continuous operation.

F. The belt filter presses shall be of continuous belt design with three dewatering zones including a gravity drainage section, followed by a wedge zone and an increasing pressure, drum and roller zone to yield cake dryness required. The machine shall be of type, which entrains sludge between two continuous open meshed belts with a system of perforated and solid rollers. A belt tension system shall act on these rollers exclusively to provide increasing pressure as sludge advances toward discharge of machine. A third and separate belt will be allowed for gravity section if required per standard configuration. Belt filter press shall be complete with all necessary motors, gear drives, hydraulic system, control panel, alarm system, belts and belt wash system, and appurtenances required for a complete and operable system. Dewatered sludge shall then be removed from belts with scrapers (doctor blades) and belts shall then be washed prior to receiving additional sludge.

G. Machine shall be completely factory assembled and tested, unless otherwise specified herein. The main frame assembly shall require only bolting to floor and connection of external piping and electrical wiring. Flocculation devices, belts, pre-dewatering drums, and other equipment which might be damaged during shipping if mounted on main frame shall be installed following shipment by a representative of manufacturer. All electrical components located on machine shall be pre-wired at factory except connections between machine and control panel which will be completed in field.

H. Machine shall be designed and constructed in such a manner so as to be suitable for continuous heavy-duty use in a humid and corrosive atmospheric environment.

I. Routine maintenance shall be possible without taking machine out of service. Belts shall be replaceable without requiring disassembly of belt filter presses.

J. All parts requiring routine maintenance shall be readily accessible from outside of machine. Side panels, where furnished, shall be easily removable for access to machine's components and shall be securely attached to frame when in place.

2.04 PERFORMANCE REQUIREMENTS

A. As a minimum, press shall provide following performance characteristics when operating in accordance with conditions presented in this section:

B. Sludge Characteristics:

1. Type of sludge: anaerobically digested primary and waste activated sludge
2. Sludge Production:
   a. Design Annual Average Daily Sludge Production: 18,700 lb/day dry solids.
   b. Design Maximum Month Average. Sludge Production: 26,250 lb/day dry solids.
3. Sludge Consistency:
   a. Average Sludge Dry Solids: 1.6 percent.
   b. Minimum Sludge Dry Solids: 0.6 percent.
   c. Maximum Sludge Dry Solids: 2.1 percent.
   d. Volatile Solids Content: 55 to 78 percent
4. Belt Filter Press Parameters:
   a. Hours of Operation: 15 hours/day, 7 days/week for maximum month average sludge production.
   b. Design Sludge Flow Rate to Press at Average Percent Dry Solids: 160 gpm per press.
   c. Design Sludge Dry Solids Weight to Press: (Maximum Month Average Sludge Production): 1,000 lb/hr per press.
   d. Minimum Required Cake Dry Solids at Average Percent Feed Sludge Dry Solids: 20 percent.
   e. Minimum Solids Capture: 95 percent (filtrate solids plus washwater solids).
   f. Maximum Polymer Usage at Average Percent Feed Sludge Dry Solids: 23 lb/dry ton of feed sludge dry solids.
   g. Number of Belt Filter Presses Required: 3.

2.05 EQUIPMENT LAYOUT

A. The manufacturer is alerted to fact that sludge dewatering room layout is dictated by existing space available. The existing belt filter press layout is depicted in reference drawings contained in Request for Proposals.

B. The belt filter press equipment shall not extend higher than 10 feet which allows nominally three feet of headroom with structural ceiling of existing building when mounted to existing floor elevation. Similarly, required space for maintenance of equipment on any side must be possible given constraints of existing room. See reference drawings contained Request for Proposals.

C. The belt filter press equipment shall discharge dewatered cake onto existing horizontal belt conveyor. The existing conveyor belt runs at 2'-8" above existing floor elevation with side guards that extend to 3'-7" above floor. Cake shall be dropped onto conveyor at a maximum height of 1'-6" above belt. Proposed equipment shall be configured to operate with existing conveyor configuration. Provide vertical box chute with flexible shields at conveyor/box interface to facilitate containment of sludge cake while allowing conveyor cake to transverse through chute.

D. The manufacturer shall identify, as part of shop drawings for belt filter presses, complete layout of any platforms, access bridges and other auxiliary equipment recommended for operation or maintenance of equipment including visual inspection of top of gravity section.

2.06 MATERIALS

A. Frame: Steel, ASTM A36, hot-dip galvanized ASTM A123.

B. Splash guard, vertical box chute: ASTM A320, stainless steel, Type 316LT

C. Drum rollers: ASTM A320, stainless steel, Type 316L.

D. Rollers: Steel tube, ASTM A36, 1/2” minimum coated with Rilsan nylon II or ASTM A320 Type 316 stainless steel.

E. Roller shafts: ASTM A320, stainless steel, Type 316.

F. Hydraulic piping: ASTM A320, stainless steel, Type 316.

G. Plows and sludge distribution equipment: ASTM A320, Type 316, stainless steel, coated as specified.

H. Belt filter cloth: Monofilament polyester.

I. Belt seam closures (for seamed belts): ASTM A320, Type 316, stainless steel.

J. Spray headers: ASTM A320, Type 316, stainless steel.

K. Spray nozzles: ASTM 320, Type 316, stainless steel.

L. Drainage pans: ASTM A320, Type 347L, 316L, stainless steel.

M. Internal pressure piping: ASTM A320, stainless steel, Type 316.

N. Drains: schedule 80 PVC or ASTM 320, Type 316.

O. Anchor bolts and miscellaneous hardware, including bolts, nuts and washers: ASTM A320, Type 316 stainless steel.

P. Mixing drum and head box: ASTM A320, Type 316L stainless steel.

Q. Control panels: ASTM A320, stainless steel, Type 316L.

R. Materials specified are considered minimum acceptable for purposes of durability, strength, and resistance to erosion and corrosion. The manufacturer may propose alternative materials for purpose of providing greater strength or to meet required stress limitations. However, alternative materials must provide at least same qualities as those specified for purpose.

2.07 CORROSION PROTECTION

A. The ferrous metal and related components shall be protected by hot dip galvanizing. Hot-dip galvanizing shall be in accordance with ASTM A123 after fabrication. No cutting, welding, drilling, or punching will be permitted on any portion of frame after galvanizing.

B. All pre-painted purchased equipment such as electrical motors, gear boxes, hydraulic cylinders etc., are to be painted with a manufacturer's standard coating finish suitable for severe duty applications.

C. Control panel enclosures shall be NEMA 4X constructed of Type 316L stainless steel. The inside of enclosure shall be white.

2.08 FRAME

A. The press frame shall be designed to accommodate all operating and static loads with a factor of safety of not less than 5 and shall function without deflection, deformation, or vibration which will in any manner degrade performance of equipment. No disassembled component shall weigh more than 4,000 pounds.

B. Frame design shall evenly distribute all loads to supporting building structural system. Frames can be multiple leg configuration for floor or pedestal installation or skids for floor installation.

C. Lifting lugs shall be provided, and access platforms shall be recommended to afford convenient access to maintenance points throughout press.

D. Splash guards shall be provided to confine all liquid to within confines of existing drain containment basin. Splash guards shall be designed to permit convenient access to all interior portions of press for maintenance purposes.

E. In their principal load bearing direction, no unsupported frame spans greater than 84 inches will be permitted. The structural design of all framing members shall limit deflection to no more than 1/480 of span. Design maximum stresses shall not exceed 20 percent of material's yield strength. Upon

completion of all fabrication work, all components of press' framing system shall be coated in accordance with requirements of paragraph “Corrosion Protection.”

F. Frame shall have accurately machined and positioned seats for all bearings, arranged to ensure and maintain absolute alignment of all rotating elements under all loading conditions.

G. Provide recommendation for anchor bolt system for cast-in-place installation using Type 316 stainless steel.

2.09 DRAINAGE

A. Drainage pans shall be provided under all dewatering and belt washing zones to contain all liquids and conduct this material to drain sump to be incorporated into machine's support base. The drainage pans, shields and piping shall be designed to confine all spray and splashed liquids and to conduct these to sump. Drained connections shall be self-venting to prevent overflow. The main sludge inlet area shall include a high-level overflow which shall discharge, through appropriate piping to sump beneath press. A NEMA 4X float switch shall be provided in drainage pan. The switch shall be set to close when sludge receptor area is near overflow elevation.

B. The low point of any drainage pan shall be provided with a connection for drain piping. Drainage piping shall be Schedule 80 PVC and shall be routed from each pan and shall terminate within confines of filtrate sump.

C. The drainage pans shall extend a minimum of 3-inches beyond belt width on both sides and shall have a minimum 1-inch depth at any given point. The drainage pans shall be constructed of a minimum 14-gauge Type 316L stainless steel.

2.10 BELT WASH SYSTEM

A. Both dewatering belts shall be provided with a washing system consisting of piping, nozzles, drip pans, and spray containment shields as required to clean area in contact with sludge prior to returning to pressing zones.

B. Stainless steel nozzles shall be designed with a self-cleaning mechanism to provide cleaning action without disassembly or interruption of operation.

C. Spray piping and nozzles shall be adequately braced and shall be of sufficient pressure rating to withstand pressure transients caused by sudden valve closures.

D. Spray water shall be contained within press enclosure.

2.11 SLUDGE CONDITIONING

A. The press shall be provided with a sludge conditioning system designed specifically for polymer aided flocculation of anaerobically digested sludges. The system shall be configured to prevent floc breakup during transport to gravity drainage section. The sludge conditioning device shall provide an appropriate, infinitely variable range of conditioning energies to assure economic flocculation of sludge under all conditions.

B. The sludge conditioning system shall be mounted upstream of press and shall consist of an in line, nonclog, variable orifice, Venturi-type mixer with a polymer injection ring. Static mixers with stationary baffles, modified check valves or mixers requiring electrical motors and controls, or tanks with mechanical mixers shall not be acceptable.

C. The sludge/polymer mixer assembly shall be Type 316L stainless steel with ANSI compatible flanges. The mixer assembly shall include an in-line polymer injection ring made of UHMW HDPE, flow splitting manifold, tubing and fittings between injection ring and manifold. Each polymer injection ring shall inject polymer at a minimum of four points located 90 degrees apart around circumference of ring. The inside diameter of ring shall not be less than 6-inches (diameter of sludge feed piping).

2.12 FILTERING MEDIUM

A. The filter belts shall be manufactured of a continuous weave of monofilament polyester wires. Filter belts may be of split type or continuous. Seams for split belts must be designed to fail before belt, be repairable and facilitate replacement. The seam shall be designed to prevent interference with doctor blades or any other belt press equipment. Regardless of design, belts shall be suitable for convenient replacement by operating personnel.

B. Belt seam closures shall be of stainless steel. Each belt shall be heat set, and all belt edges shall be double reinforced with 1/2” plastic band. Belt edges that are heat sealed only will not be acceptable. Each belt shall be pre-stretched to limit elongation to less than 3% of overall belt length. All belts, including separate high-tension belts supplied as part of machine, shall be capable of continuously withstanding a maximum tensile force of three times maximum tension that belt will be subjected to under normal operation.

2.13 ROLLER ASSEMBLIES

A. Drum rollers, if provided, shall have one inch minimum diameter perforations spaced at not more than 3”. Scoop blades or similar devices shall be provided to extract filtrate from center of drum.

B. All rollers shall be designed for a maximum deflection of 0.05 inch at center when under maximum loading. Maximum roller loading shall include roller mass forces and tension forces resulting from belt drive and belt tension. Belt tension shall be based upon not less than 200 pounds per inch of belt width and drive tension shall be calculated on basis of a belt speed of not less than 15 feet per minute.

C. Nonperforated rollers shall be constructed of ASTM A 36/A 36M or ASTM A 500 carbon steel and coated as specified hereinafter, or from Type 316 stainless steel, each with a continuous through shaft or with stub shafts supported by double, separated end plates, all welded in place. Stub shafts welded directly to single end plates are not acceptable. All welding shall be performed by qualified and certified welding operators in accordance with applicable AWS Standards. Minimum roller wall thickness shall be 1/2”. Perforated rollers shall be constructed of Type 316 stainless steel. Drive rollers, regardless of material of construction shall be coated with a vulcanized rubber type coating. Drive rollers shall be provided with drainage channels or other suitable means to assist in removal of water and prevent slippage.

D. All rollers shall be supported with heavy-duty bearings in sealed, splashproof enclosures. Bearings shall be self-aligning, roller or ball bearing type, in horizontally split cast-iron housings with triple labyrinth seals. Alternately bearing shall be one piece machined bearing housing with a bolted and gasketed steel end plate with a quadruple seal. Bearings shall be outboard mounted and field replaceable without affecting factory alignment or without major disassembly. Bearings shall have an ABMA L-10 rating of 800,000 hours of operation based upon all forces and loads, including belt tension, roller mass and drive torque loads. Load calculations shall be based on both belts at a simultaneous belt tension of 50 pounds per lineal inch of belt and at a belt speed of 15 feet per minute.

E. Grease fittings shall be extended to face of press frame and shall be grouped in one location to facilitate maintenance operations. Bearings shall be regreaseable while press is running.

2.14 BELT TRACKING AND TENSIONING SYSTEMS:

A. The press shall be provided with both tracking and tensioning systems to insure reliable operation. The belt tracking and tensioning system shall incorporate hydraulic belt adjustments. All hydraulic piping shall be rigidly and firmly anchored to structural frame of press. All lines shall be sized according to intended use and operating pressure with a factor of safety of not less than 10.

B. Hydraulic systems shall include all pumps, reservoirs, piping, and controls for system operation. The hydraulic power pack, including pump, reservoir and pressure controls, shall be located in a position which does not impede access to press.

C. Belt tracking system:
   1. Automatic sensing devices shall be provided to actuate automatic belt tracking system and assure proper alignment of belts at all times. The sensing devices shall continuously monitor position of belt, allowing alignment roller to effect minor belt position adjustments continuously to maintain belt properly positioned within belt track. The belt tracking system shall be designed so that all belt position adjustments are performed smoothly without sharp, sudden movements of filter belt or alignment roller. The belt tracking system shall be designed to minimize belt and roller wear and extend working life of filter belts.
   2. NEMA 4X limit switches shall be provided to detect malfunctioning of tracking system. The switches shall be designed to detect gross belt misalignment and shall open to indicate belt misalignment, initiate a shutdown signal, and activate a remote alarm.

D. Belt Tensioning Assembly:
   1. Hydraulically adjusted belt tensioning assembly shall be provided. Belt tension adjustment shall be through cylinder actuators for hydraulic systems acting on takeup roller hubs.
   2. Tension adjustment devices acting on center of roller will not be permitted. Means shall be provided to maintain roller alignment and provide even tension throughout width of belt. Belt tension shall be variable and tension adjustment shall be possible while machine is in operation. Either system shall maintain a constant tension on belt regardless of cake thickness. A pressure gage or similar device shall be provided to indicate actual belt tension, and normal operating limits shall be indicated on face of gage.
   3. The belt tensioning system shall be designed to ensure simultaneous and parallel movement of tensioning roller ends during adjustment and to accommodate at least 3 percent increase in belt length. Belt tension shall be infinitely variable and shall be adjustable without shutdown of machine.

E. Hydraulic System
   1. Each hydraulic system (one for each press) shall include hydraulic pump and motor, reservoir with sight glass, filters, valves, gages, piping, and controls required for system operation. Provide a suitable pressure switch in a NEMA 4X enclosure to activate an alarm on low hydraulic fluid pressure. The hydraulic system shall be designed for location up to 25 feet remote from belt filter press or may be incorporated in belt press framework.
   2. The hydraulic pump motor shall be totally enclosed, fan cooled motor with Class F insulation, suitable for operation on 460-volt, 3-phase, 60 Hz power. Space heaters, 120-volt single-phase, shall be placed in each motor frame.
   3. Hydraulic system components shall be mounted on a rigid common baseplate suitable for floor or wall mounting if remotely located. Baseplate shall be stainless steel.
   4. Controls:
      a. Equipment described herein shall be contained within belt filter press control panel.
      b. Two combination circuit breaker/magnetic across line motor starters with 120-volt control circuits for pump motors. Each starter shall have three thermal overload relays of melting alloy type. Each starter shall be provided with a normally closed starter contact for control of space heater furnished with motor.
      c. Control logic shall be provided for Owner to program within plant SCADA system.

2.15 GRAVITY DEWATERING SECTION

A. The gravity dewatering zone shall accept flocculated sludge from sludge conditioning system, and permit free water contained within conditioned sludge to readily separate from sludge and drain to a collection pan.

B. The gravity drainage section shall be furnished with a sludge inlet assembly consisting of a distribution chute and leveling weir designed to evenly distribute conditioned sludge across entire effective width of moving filter belt. The materials in contact with sludge in distribution area shall be Type 316L stainless steel with a minimum thickness of 14-gauge.

C. The conditioned sludge shall be contained on belt with adjustable containment barriers equipped with replaceable rubber seals to prevent leakage. The containment barriers shall be constructed of minimum 14-gauge Type 316L stainless steel, and shall be mounted on both sides of belt and at

sludge feed end of gravity section. The side skirts shall be equipped with urethane seals or other elasticized materials to prevent spillage of sludge. The replaceable rubber seals shall be attached to containment barriers with a friction fit.

D. The gravity drainage section shall be furnished with chicanes (plows) to adequately furrow conditioned sludge to promote drainage of water from sludge. All surfaces of chicanes and other devices contacting filter cloth shall be coated with teflon or similar smooth material to prevent rapid deterioration of belt surface. Each row of chicanes shall be provided with a single lifting handle or automatic lifting system, designed to remove entire row of chicanes at least 6” from belt, out of sludge flow, to facilitate cleaning. Chicanes shall be designed to be individually adjustable laterally and shall pivot to allow them to pass over obstructions on belt. Each set of chicanes shall be mounted on a Type 316L stainless steel horizontal support bar.

E. The gravity dewatering belt shall be supported to minimize belt sagging by either a grid, or a plate designed to minimize belt wear and facilitate free drainage of filtrate. The support shall be a minimum 2-inches wider than belt on each side. Wear strips, if used, shall be replaceable without removing or disassembling gravity section sidewalls and chicane assemblies.

2.16 WEDGE COMPRESSION SECTION

A. Following gravity drainage section, sludge shall enter a low-pressure section where converging belts shall exert continuously increasing pressure.

B. Means shall be provided to adjust angle of convergence while press is in operation to permit operators to optimize dewatering operations. Containment seals shall be provided on both sides of wedge compression section to prevent sludge from escaping.

C. The wedge compression section shall be configured to permit liquid to escape through both belts.

2.17 ROLL PRESSURIZATION SECTION

A. Following wedge compression section, sludge shall enter a dewatering section of increasingly greater pressure, where two belts pass sequentially over series of rollers of decreasing diameter.

B. The roller diameters and belt tensioning system, in combination, shall exert increasingly greater pressure as liquid is removed from sludge, thereby effecting efficient dewatering, yet assuring efficient capture of solids.

2.18 SCRAPER BLADES AND DISCHARGE CHUTE

A. Replaceable scraper blades shall be provided to efficiently separate dewatered cake from belt. A discharge chute shall be provided to conduct cake to middle of belt conveyor for removal. The scraper blade shall be mounted opposite a belt roller to insure efficient cake removal. The pressure exerted by scraper blade against belt shall be adjustable while press is in operation. Adjustable weights on lever arms will not be an acceptable means of providing this feature. Operation of doctor blades shall be in such a manner as to minimize wear to belt seam.

B. Doctor blades shall have springs or counterweights to maintain pressure against belts, constructed of rubber, plastic or fiberglass reinforced plastic, readily removable and positioned on each belt at discharge end of machine to effectively remove sludge cake from belts. All springs and hardware shall be of stainless steel. A lifting device shall permit movement of blades away from belts for cleaning, all without machine shutdown. Alternately, hydraulic system can be used to operate and lift doctor blades.

2.19 ELECTRICAL

A. Control panel shall accept a 460 volt, 60 hz, 3-phase ac power input. A main disconnect circuit breaker and operator mechanism shall be included. When disconnect is in open position all power shall be removed from control system.

B. All conduit shall be Schedule 40 PVC, standard weight galvanized conduit with PVC coating, or standard weight conduit coated and lined with fusion applied epoxy as specified. Limit switches, float switches, and all other electrical devices shall be NEMA 4X enclosures with contact rated not less than NEMA A300. Conduit shall be routed to be protected by belt press frame where possible.

C. Switches and other 120-volt devices shall be wired in conduit to a labeled, gasketed, NEMA 4X junction box located on press frame. The junction box shall include terminal blocks for interface of all factory-wired devices with instrumentation and controls specified in herein.

D. A mushroom head emergency stop push button station or emergency lanyard shall be provided on each side of machine. The device shall have a separate manual reset.

E. Each belt filter press unit shall be provided with a nylon "pull cord" on both sides in ring supports to provide emergency shutdown of all belt filter press motors and appurtenant equipment. Trip switch contacts shall be DPDT. rated 10 amperes at 120 volts.

2.20 DRIVE UNIT

A. The belts and rollers shall be driven by a variable frequency drive unit to achieve infinitely and uniformly variable speed adjustment while press is in operation through manual adjustment of a control device located on control panel. The variable frequency device, complete with 1:1 isolation transformer, shall be provided separately by belt press manufacturer for installation in motor control lineup specified.

B. Drive motors shall be rated for inverter duty, variable frequency service designed for belt drive purpose and rated as premium efficient motors. Motors shall have totally enclosed fan cooled (TEFC) enclosure. Motors shall be rated at 150% nameplate horsepower of required horsepower maximum service condition. Provide motor speed indicator readout for in main press control panel for all drives. Variable frequency drives for shall be furnished within press control panel.

C. All portions of drive unit shall be totally enclosed with all gearing running in oil or grease lubricated and all drive chains and sprockets completely enclosed in a permanently greased housing.

D. Speed reducer: AC motor driven, helical shaft mounted gear reducers, with a 1.15 service factor. Worm gear reducers shall not be acceptable. The speed reducer housing shall be cast iron or fabricated steel welded construction and shall be totally enclosed, dustproof, and oil tight. Speed reducers shall be rated for minimum AGMA Class II service.

E. Drive controller: Drive motors shall be controlled by a single variable frequency drive. The variable frequency drive controller shall provide 0 – 460 volts ac, 2 - 60 Hz output capable of driving belt at from 3 to 15 feet per minute.

2.21 CONTROLS

A. Belt filter press system will be controlled from existing SCADA system. Belt filter press equipment manufacturer shall provide control description and I/O list that will be installed in SCADA system by a third party. Control information submitted shall incorporate control of all systems provided by belt filter press supplier including, belt filter press, hydraulic system (if provided)). Belt filter press supplier shall also provide control panels described herein.

B. BFP master (main control panel for each belt filter presses shall be supplied with a stainless steel 33" x 57" backpanel/subpanel that shall replace that within existing freestanding BFP main control panels. Panel shall accept 460 VAC, 60 Hz, 3-phase power and contain following main control components:
   1. Variable frequency drive controller with short-circuit and overload protection for main belt drive,
   2. Motor starters with short-circuit and overload protection for hydraulic pump.
   3. Terminal landing strip shall be provided for control components and connection to existing SCADA system.

C. Each belt filter press shall be supplied with a local control panel rated for NEMA 4X and constructed of stainless steel that shall be frame or wall mounted. Panel will be located locally to belt filter presses and shall contain selector switches required for maintenance which included extending and retracting belt tensioning system and forward and reversing direction of belt movement, in addition to an emergency stop pushbutton.

D. Main control panel shall be completely pre-wired and factory tested prior to shipment.
   1. Motor starters: Full-voltage, nonreversing, IEC style across line units. Coils shall be 120 volts ac. Allen Bradley Style 140Mw/100 contactors.
   2. Speed controllers: Capable of outputting a 4-20mA dc or 0-10 volts dc setpoint control signal and accept a 4-20mA dc or 0-10 volts dc status signal. Controller shall be capable of PID control. Red Lion P48 or equal.
   3. Pushbuttons: Heavy-duty, oil tight/watertight, corrosion resistant units rated for NEMA 4X service. Contact blocks shall be rated for 10-ampere continuous service. Allen Bradley Type 800 H, or equal.
   4. Pilot lights: Heavy-duty, oil tight/watertight, corrosion resistant units rated for NEMA 4X service. Units shall be 120 volts ac transformer type. Allen Bradley Type 800 H, or equal.
   5. Terminal blocks: High-density, spring cage clamp style, with 600-volt rating. Wago Class 280, or equal.
   6. Variable frequency drive: UL listed and shall be Allen Bradley Powerflex 400 style, and provide for Ethernet communications.

PART 3 EXECUTION

3.01 INSTALLATION - GENERAL

A. Belt filter presses shall be completely factory assembled. Erection shall require only bolting to foundation and connection of external piping and wiring.

3.02 FIELD TESTING AND NONCOMPLIANCE PENALTIES

A. Functional test:
   1. Perform functional testing for each belt filter press installed.
   2. Prior to system start-up, system components shall be inspected for proper alignment, proper connection, and satisfactory operation.
   3. Manufacturer's representative shall inspect installation, check for lubrication and minor adjustments, provide certification that system components have been installed correctly and are ready for operation. Notify Owner and Engineer prior to demonstrating machine operability.
   4. Demonstrate machine is operable by successfully running for two consecutive 8-hour days without mechanical, electrical, or control-induced malfunction.

B. Initial Performance test:
   1. Performance test shall not begin until functional testing has been completed to Owner's and Engineer's satisfaction.
   2. After start-up, manufacturer shall conduct a performance test using Owner's sludge to determine actual system operating conditions and verify that unit meets minimum requirements specified herein.
   3. Prior to performance tests, manufacturer shall perform optimization testing as necessary to determine and recommend most effective type of polymer to produce specified performance.
   4. Owner shall provide sludge feed, water, electrical power, and sludge cake disposal necessary to conduct performance tests. Polymers required shall be provided by Owner at recommendation of manufacturer.
   5. Cost of laboratory testing necessary to confirm performance for initial test shall be borne by Owner.
   6. If, after a minimum of five 7-hour test runs, with 3 rounds of sampling per run in opinion of Owner, system meets minimum performance requirements specified herein and supply sludge was within specified operating ranges of same paragraph, Engineer will recommend, by letter, that press met initial performance testing requirements and authorizes extended performance testing.

7. If, in opinion of Engineer, performance test results do not meet requirements specified herein and supply sludge was within specified operating ranges of same paragraph, Engineer will notify Owner and Contractor of failure of initial performance testing.
8. In case of nonacceptable performance, manufacturer shall then have 30 days in which to perform at its sole expense, supplemental testing, equipment adjustments, changes or additions and to perform retest of nonacceptable system.

C. Extended performance testing:
1. Do not begin until initial performance test has been completed to Owner's and Engineer's satisfaction.
2. Extended performance testing shall consist of a 60-day performance period where manufacturer-trained Owner staff operate dewatering equipment utilizing coagulant and polymer combination utilized in initial performance testing.
3. Owner will make daily measurements of dewatering equipment performance - coagulant and polymer consumption, power use, influent solids characteristics, dewatered sludge cake solids concentration, solids capture, and average daily throughput. Results will periodically be communicated to equipment manufacturer.
4. Owner will also evaluate equipment operability and reliability during this performance period.
5. Equipment manufacturer has right to provide a representative onsite during testing period to observe equipment performance and operator activities.
6. Extended performance testing results will be reviewed by Owner and Engineer to determine:
   a. Belft filter press has met specified performance requirements
   b. Belt filter press has demonstrated its operability and reliability.
   c. Results will be shared with equipment manufacturer.
7. If extended performance test results are acceptable, Engineer will recommend, by letter, official acceptance of belt filter press.
8. If, in opinion of Engineer, performance test results do not meet requirements specified herein, Engineer will notify Owner and Contractor of nonacceptable performance.
9. In case of nonacceptable performance, manufacturer shall then have 30 days in which to perform at its sole expense, supplemental testing, equipment adjustments, changes or additions including piping and chemical feed points, and to perform extended performance retest of nonacceptable system.
10. After retesting, should equipment fail to meet minimum specified performance requirements equipment will be rejected. Contractor shall replace failed equipment with different model units appropriate for meeting specified performance at no additional cost to Owner. As an alternative Contractor may elect to remove their failed equipment, provide full refund of cost of equipment to Owner and pay a penalty in amount of 25% to assist Owner in obtaining and installing alternate equipment. Failure to achieve specified performance criteria upon retesting shall constitute basis for Owner to seize performance bond as specified above.

3.03 OPERATIONAL INSTRUCTIONS AND TRAINING

A. Provide training in accordance with Section 01 43 33.

B. Upon completion of training, submit certification Form B provided at end of this section.

3.04 MANUFACTURER INSPECTION AND AFFIDAVIT

A. Furnished one or more experienced service engineers experienced in installation, adjustment, and start up in accordance with Section 01 43 33.

B. Upon completed installation, acceptable performance testing, and completion of Owner's training, submit a signed affidavit certifying that supplier or manufacturer has observed and accepts that all stages of construction, installation, testing, and training have been adequately performed. The affidavit shall conform to form and style of Form C provided at end of this section.

C. Provision of inspection, approval, and affidavit by belt filter press supplier or manufacturer shall in no way relieve manufacturer of any responsibilities or requirements of this contract, including system installation, testing, commissioning, and guarantee specified above.

END OF SECTION

1) J. M. Brady
2) D. K. Mathias

EXHIBIT A

ESCO AUTOMATION

Empowering people.
Exceptional services.
Delivering on promises.

Project Proposal

City of Iowa City Waste Water
BFP Upgrade
Presented To: Bidders List
October 6, 2017
64170123

Prepared by
Dan Tabaka
ESCO Automation

3450 Third Street, P.O. Box 708, Marion, IA 52302
PH: 319-377-6655 Fax 319-377-9532

4905 Hubbell Avenue, Suite 2, Des Moines, IA 50317
PH: 515-263-8482 Fax 515-263-2773

357 S. McCaslin Blvd, #200, Louisville, CO 80027
PH: 303-734-7144 Fax: 720-874-9709

www.theESCOGroup.com

CONFIDENTIAL DOCUMENT – PROPRIETARY NOTICE
This document is the intellectual property of ESCO Automation. The information contained on all pages of this document consists of technical, commercial, and/or financial information, which is confidential and proprietary to ESCO Automation. This information is furnished in confidence that it may not be reproduced, used, or disclosed to a third party, in whole or in part, without the written consent of ESCO Automation.

Background and Basis

The City of Iowa Waste Water Facility is planning to replace 3 Belt Filter Press (BFD) Units in the Sludge Processing Building and have asked ESCO Automation for a proposal to integrate the new units into their existing system. Unless otherwise stated in this proposal, the plans and specifications for the City of Iowa City Belt Filter Press Replacement Project 26710, dated August 30th, 2017 shall be used as the controlling document.

Business Objective

Project completion is planned before May 31, 2018.

Scope of Work, Deliverables, and Acceptance Criteria

Project Management

In order to achieve success, ESCO will appoint a Project Manager to oversee the ESCO Automation project efforts. ESCO has accounted for this dedicated project management resource in the pricing reflected in this proposal.

Electrical Design

ESCO Automation will update the existing electrical and I/O schematics for the new PLC I/O points specifically related to the Belt Filter Presses. Upon completion ESCO Automation will provide a copy to the plant in AutoCAD or pdf format.

Submittals: Limited to:
PLC connections drawings
Interconnect drawings between SCADA PLC and Belt Filter presses
Demolition drawings of existing wiring to old equipment (controls only – no 480 volt drawings)
As-built PLC drawings
Final I/O count

Materials

There is no hardware included in this proposal.

Software Development

ESCO Automation will provide programming for the new equipment added as part of this project. Many points exist in the current system and will be repurposed.

CONFIDENTIAL DOCUMENT – PROPRIETARY NOTICE
This document is the intellectual property of ESCO Automation. The information contained on all pages of this document consists of technical, commercial, and/or financial information, which is confidential and proprietary to ESCO Automation. This information is furnished in confidence that it may not be reproduced, used, or disclosed to a third party, in whole or in part, without the written consent of ESCO Automation.

I/O estimates are from the specifications. Many points exist in current system and will be repurposed. All Analog points are either existing or will be communicated via Ethernet from the new VFDs. This also includes all I/O for the new exhaust fans and odor control system if necessary (4 existing and 1 new for the BFP exhaust):

I/O Estimates:

Digital Inputs – 56 (3 pressure switches not listed in main I/O estimate)
Digital Outputs – 27
Analog inputs -3 (conductivity probes)
Virtual (Ethernet) Analog Inputs – 6
Virtual (Ethernet) Analog Outputs – 6
Virtual (Ethernet) Discrete Inputs – 6
Virtual (Ethernet) Discrete Outputs – 18

Commissioning

ESCO Automation will provide up to 150 hours of onsite support for I/O checkout and commissioning. This includes one Engineer working 10 hour days onsite for 3 weeks. Travel expenses included.
Commissioning tasks to be limited to:
Verification of electrical installation of control connections
Commissioning of (4) Polymer pump VFD's
Integration of Belt Filter Press controls to Iowa City SCADA PLC's

Electrical Installation

No Electrical Installation Services are included in this proposal.

Content Requirements & Standards

ESCO Automation will adhere to the City of Iowa City Waste Water standards. If no standards exist, ESCO will follow our own internal safety standards.

CONFIDENTIAL DOCUMENT – PROPRIETARY NOTICE
This document is the intellectual property of ESCO Automation. The information contained on all pages of this document consists of technical, commercial, and/or financial information, which is confidential and proprietary to ESCO Automation. This information is furnished in confidence that it may not be reproduced, used, or disclosed to a third party, in whole or in part, without the written consent of ESCO Automation.

Project Milestones

No schedule has been defined at the time of this proposal. Upon intent to award is complete, ESCO will require a contract or PO within 4 weeks in order to ensure resource availability.

Exceptions, Assumptions, and Constraints

- This proposal is limited to specification section 40 96 15.
- This Proposal does not include any changes in scope. Changes to scope will be addressed at the time of the change using ESCO Automation standard change order process
- No Electrical Installation Services are included in this Proposal
- Work to be done during normal straight time hours
- No programming or modifications to the HVAC control system are quoted. Integration of HVAC controls limited to single PLC discrete input and output.
- No network changes are included.
- No wiring pull lists or conduit schedules will be provided.

Risks

Timely OEM information and access to approved submittals will be critical to the success of this project. As other risks are discovered, ESCO Automation will discuss these with the City of Iowa City Waste Water representative to form a mitigation plan in order to reduce the impact on the budget and schedule.

CONFIDENTIAL DOCUMENT – PROPRIETARY NOTICE
This document is the intellectual property of ESCO Automation. The information contained on all pages of this document consists of technical, commercial, and/or financial information, which is confidential and proprietary to ESCO Automation. This information is furnished in confidence that it may not be reproduced, used, or disclosed to a third party, in whole or in part, without the written consent of ESCO Automation.

Pricing Summary & Payment Terms

Engineering Labor	*$ 56,500.00*
Project Total	***$ 56,500.00 (FFP)***

Contract Terms:
Contract Type: Firm Fixed Price
100% Monthly Progress Billing
Payment terms are Net 30 days

Thank you for continuing to give ESCO Automation the opportunity to propose our services.

Sincerely,

Dan Tabaka

Dan Tabaka
Phone: 319-739-2224
Fax: 319-377-9532
Email: dantabaka@TheESCOGroup.com

CONFIDENTIAL DOCUMENT – PROPRIETARY NOTICE
This document is the intellectual property of ESCO Automation. The information contained on all pages of this document consists of technical, commercial, and/or financial information, which is confidential and proprietary to ESCO Automation. This information is furnished in confidence that it may not be reproduced, used, or disclosed to a third party, in whole or in part, without the written consent of ESCO Automation.

Terms and Conditions of Sale

This Agreement is entered into between Purchaser and ESCO Automation (hereinafter called "ESCO AUTOMATION") with its principal office located in Marion, Iowa.

1. SCOPE OF SERVICES

ESCO AUTOMATION shall furnish the services and deliverables described in the preceding document. Such services shall be performed by individuals as employees of ESCO AUTOMATION and not as employees of purchaser. If the services are to be performed at purchaser's plant, ESCO AUTOMATION's employees shall abide by rules established by purchaser.

2. TERM OF AGREEMENT

The agreement shall commence as of the date of the issuance of the Customer Purchase Authorization Document and be concluded no later than the date of acceptance of the final Deliverable as defined in the preceding document.

3. LIABILITY

Excluding liability resulting from defects in the equipment described herein or liability arising from the negligence from ESCO AUTOMATION, ESCO AUTOMATION shall not be held liable for damages to the purchaser. The purchaser further agrees to hold ESCO AUTOMATION harmless from any and all claims, actions, proceedings, expenses, and damages it may have against ESCO AUTOMATION arising in connection with the above-described equipment, except for those arising from the negligence of ESCO AUTOMATION with respect to:

1. Injury or death to any person whatsoever.
2. Property damage which may occur as a result of the purchaser's use of the equipment on the purchaser's premises.

Written notification of any deficiencies existing in the attached quoted items will be forwarded to ESCO AUTOMATION within 90 days after discovery of such deficiencies. Absence of written notification of any deficiencies will be construed to indicate satisfactory fulfillment of the agreement. This paragraph in no way nullifies or changes the terms of the warranty herein.

4. CHANGES

Purchaser within the general scope of this agreement, may at any time, by a written notice to ESCO AUTOMATION, issue additional instructions, require additional services or direct the omission of services covered by this agreement. If any such change causes an increase or decrease in the cost of, or the time required for, the performance of any part of the work under this agreement, an equitable adjustment shall be made in the price or delivery schedule, or both, and this agreement modified in writing accordingly. Information, advise, approvals or instructions given by purchaser's technical personnel or other representatives shall be deemed expressions of personal opinion only and shall not affect purchaser and ESCO AUTOMATION's rights and obligations hereunder unless set forth in a writing which is signed by a

CONFIDENTIAL DOCUMENT – PROPRIETARY NOTICE
This document is the intellectual property of ESCO Automation. The information contained on all pages of this document consists of technical, commercial, and/or financial information, which is confidential and proprietary to ESCO Automation. This information is furnished in confidence that it may not be reproduced, used, or disclosed to a third party, in whole or in part, without the written consent of ESCO Automation.

member of purchaser's management organization and which expressly states that it constitutes an approval, amendment, or change to this agreement. Any claim by ESCO AUTOMATION for an adjustment must be made in writing within thirty (30) days of the receipt of any such notice. Nothing in this clause shall excuse ESCO AUTOMATION from proceeding without delay to perform this agreement as changed.

5. WARRANTY

Engineering Services provided by ESCO AUTOMATION are warranted for twelve (12) months, starting from commissioning or sixty (60) days from shipment whichever occurs first. Services rendered beyond the warranty period or that are determined not to be covered under the warranty shall be invoiced on a time and material basis utilizing the billing rate structure in effect at that time. Hardware and 3rd party software packages are warranted through the original manufacturer's warranty.

6. RIGHT TO DATA AND INFORMATION

Purchaser agrees that, notwithstanding any other provisions hereof and notwithstanding any termination of this agreement, all data and information (including without limitation computer software, computer data bases, computer documentation, specifications, reports, designs and the like generated or designed in the performance of or delivered under this agreement, as well as any information provided to ESCO AUTOMATION by purchaser, shall be and remain the sole property of ESCO AUTOMATION and are protected by United States copyright laws and international treaty provisions. ESCO AUTOMATION retains all rights not expressly granted. ESCO AUTOMATION grants purchaser an unlimited, unrestricted and non-exclusive, fully paid, world-wide license to all background intellectual property of ESCO AUTOMATION necessary to fully practice and utilize any design or product (including software) resulting from performance hereunder. ESCO AUTOMATION also grants purchaser the right to copy program and software for the sole purposes of "backing-up" the program or for modifying the program.

ESCO AUTOMATION further agrees not to knowingly include any material copyrighted by others in technical data delivered under this agreement without first obtaining for the benefit of purchaser, a license therein of the same scope as set forth herein.

7. OWNERSHIP OF INTELLECTUAL PROPERTY

All ownership rights and intellectual property rights in the Deliverables, including the code, sequence, logic, structure and screens, and the concepts and technology inherent therein, shall remain at all times in ESCO AUTOMATION.

Notwithstanding any other provision hereof and notwithstanding any termination of this Agreement, all inventions, discoveries or improvements, made, suggested, conceived, devised or first actually reduced to practice in the performance of services hereunder shall become the property of ESCO AUTOMATION. ESCO AUTOMATION retains the entire right, title and interest, worldwide, in any invention or patent hereunder conceived of first actually reduced to practice in performing this agreement.

CONFIDENTIAL DOCUMENT – PROPRIETARY NOTICE
This document is the intellectual property of ESCO Automation. The information contained on all pages of this document consists of technical, commercial, and/or financial information, which is confidential and proprietary to ESCO Automation. This information is furnished in confidence that it may not be reproduced, used, or disclosed to a third party, in whole or in part, without the written consent of ESCO Automation.

CONFIDENTIAL DOCUMENT – PROPRIETARY NOTICE
This document is the intellectual property of ESCO Automation. The information contained on all pages of this document consists of technical, commercial, and/or financial information, which is confidential and proprietary to ESCO Automation. This information is furnished in confidence that it may not be reproduced, used, or disclosed to a third party, in whole or in part, without the written consent of ESCO Automation.

EXHIBIT B

Charter Machine Company
Water Treatment Machines Division
A GEC Subsidiary

MECHANICAL and ELECTRICAL SUBMITTAL

Two (2) THREE BELT TOWER PRESS - Model No. 3BTP22.93S

Stanley Consultants Project Number – 17-110
Charter Machine Project Number – 770.22.93

PREPARED FOR

IOWA CITY WWTP
IOWA CITY, IOWA

ENGINEER

STANLEY CONSULTANTS
225 Iowa Ave.
Muscatine, IA 52761
Phone: 412-494-0510

August 9, 2017

This Page Intentionally Left Blank

IOWA CITY, IOWA

Table of Contents

SECTION		TAB
INSTALLATION AND HANDLING INSTRUCTIONS		**1**
WARRANTIES		**2**
SPECIFICATIONS		**3**
BELT PRESS DRAWINGS		**4**
Machine Views	3BTP22.93S-22	
Foundation	3BTP22.93S-03	
Parts Drawing and List	3BTP00.93S-27	
HYDRAULIC SYSTEM		**5**
Hydraulic Schematic	TP00.93S-25	
Hydraulic Power Unit - Layout	HA62322	
Reservoir / Strainer / Filter		
Pump / Motor		
Cylinders - Thickener Section / Press Section		
Hydraulic Manifold Schematic Drawing	HA62164	
Hydraulic Manifold / Components		
WASH WATER SYSTEM		**6**
Wash Water Assembly	3BTP00.93S-B-041	
Spray Pipes		
Water Pressure Switch		
ELECTRICAL COMPONENTS		**7**
Belt Switches – Over-Travel / Break		
Safety Stop Switch		
Cable / Fittings / Enclosure		
BELT DRIVES		**8**
Thickener Section		
Press Section		
BEARINGS		**9**
Roller and Bearing Location	3BTP00.93S-04	
Closed Cap Bearing Assembly	TP00.43S-A-2952-1	
Drive Bearing Assembly	TP00.43S-A-2952-2	
Insert / Seals		
Housing Coating		

IOWA CITY, IOWA

Table of Contents

SECTION		TAB
COATINGS		**10**
	Rollers / Frame	
FILTER BELT		**11**
POLYMER CONDITIONING SYSTEM		**12**
	General Installation Notes	
	6” In-Line Mixer Drawing	TP00.4-B-031
	6” Injection Ring Drawing	TP00.4-B-014
CONTROL PANEL DRAWINGS		**13**
	Catalog Cut Sheets	
	1 Line Diagram	770-K-1line
	3 Phase Distribution	770-K-0101
	Control Logic	770-K-0102, -0105
	Panel Face Arrangement	770-K-0106
	Sub Panel Layout	770-K-0107
	Termination Diagram	770-K-0101-INT
	Name Tags	770-K-0101-TAGS

TAB 1

This Page Intentionally Left Blank

INSTALLATION AND HANDLING

INSTRUCTIONS

FOR

CHARTER MACHINE COMPANY

THREE BELT TOWER FILTER PRESS

TABLE OF CONTENTS

SECTION	DESCRIPTION	PAGE
1.	INTRODUCTION……..	3
2.	DELIVERY ……	3
3.	UNLOADING ……	3
4.	STORAGE ……	3
5.	INSTALLATION ……..	4
6.	START-UP ……..	5

1. INTRODUCTION

We at the Charter Machine Company would like to thank you for choosing Charter Machine dewatering equipment. Below is information to familiarize yourself with your equipment prior to delivery and installation. We took great care in fabricating this equipment, and would like to see that its installation is as easy as possible for you, the contractor.

2. DELIVERY

Charter Machine's dewatering equipment is fully assembled and tested in our Metuchen, New Jersey factory prior to shipment.

Shipment of equipment is typically made via standard flat bed trailers. If special shipping requirements are necessary, please notify us so arrangements can be made.

3. UNLOADING

Prior to equipment arriving on-site, arrangements should be made so that a crane and crew are ready to receive the dewatering equipment when it arrives. Before the equipment is off loaded, a quick inspection should be conducted to look for obvious signs of damage that may have occurred during transit.

All Charter Machine Three Belt Tower Presses have four lift points on each section, which should be used when removing the equipment from the trailer. Each lift point is designed to accommodate a standard lifting (chain) shackle with 1" diameter pin. Ideally, two spreader bars should be used when lifting and moving the machine. The spreader bars should be connected across the width of the machine and then each spreader bar should be connected to a central lift point.

4. STORAGE

If the dewatering equipment is not going to be installed immediately upon receipt, place each section on a wooden platform or other hard, clean, dry surface in an area where the equipment will not be damaged. The dewatering equipment should be left in its protective plastic covering, or re-covered with a plastic or canvas tarp. Any miscellaneous equipment shipped with the belt press (pumps, compressors, spare parts, control panels) should be stored under dry, weatherproof covering.

5. INSTALLATION

First the belt press section should be placed on its foundation and leveled with stainless steel shims. Next the gravity belt thickener section should be placed on its foundation and leveled with stainless steel shims. We recommend that for thickener section and the press section four (4) ¾ x 8 ½" anchor bolts (supplied by the contractor) are grouted in-place after the entire machine has been positioned.

All thickener mounted electrical controls are prewired to a common electrical terminal box (or control panel) mounted on the thickener section. All press mounted electrical controls are prewired to fullest extent possible. The contractor will terminate the existing wires in the thickener mounted terminal box, and then wire between the thickener terminal box and main electrical control panel. Additional wiring between the main control panel and auxiliary equipment (air compressor, sludge pump (s), water pump (s), polymer system (s), etc.) will be required where necessary. All connections will be clearly labeled.

The contractor shall be responsible for all necessary gaskets, fasteners, and hardware for piping connections to the dewatering equipment.

The sludge inlet on the thickener section is typically either a 4" or 6" diameter flanged connection (see equipment submittal).

The water inlet to the unit is typically a 2" diameter PVC socket connection. A 2" diameter NPT connection is supplied if a motor operated valve is specified. If the unit is supplied with a booster pump the contractor will be responsible for plumbing from the plants water supply to the inlet of the water booster pump and from the pump to the inlet on the press. If the unit is supplied with a water "recycle" option, the contractor will also be responsible for plumbing from the thickener's filtrate collection pan to the inlet of the water booster pump; 2" schedule 80 PVC piping is typical and all connections will be clearly labeled.

All thickener section mounted hydraulic components are preplumbed to a common hydraulic manifold. All press section mounted hydraulic components are preplumbed to the fullest extent possible, and the contractor shall plumb the bundled hydraulic lines to the hydraulic manifold mounted on the thickener. The contractor shall be responsible for all plumbing requirements between the hydraulic reservoir and the unit's manifold inlet and outlet. All connections will be clearly labeled.

After installation of the dewatering equipment, the unit should be covered with a plastic or canvas tarp to protect the unit from construction debris until ready for start-up.

6. START-UP

After the belt press and all ancillary dewatering equipment have been installed, the unit is ready for start-up. In order to honor the equipment warranty, a Charter Machine service technician must be present to verify installation of the equipment and conduct start-up services. Please contact Charter Machine as far as possible in advance of when start-up is to take place.

This Page Intentionally Left Blank

TAB 2

This Page Intentionally Left Blank

IOWA CITY, IOWA

THICKENER SECTION
PRESS SECTION

EQUIPMENT FRAME AND COATING

CHARTER MACHINE COMPANY shall warranty the equipment frame and frame coating for a period of three (3) years after substantial completion. This warranty shall include manufacturing defects, structural integrity and coatings. Defects or corrosion shall be repaired or replaced at no additional cost to the owner. The frame and coating shall not require preventative maintenance during this warranty period. Physical damage to the equipment could cause structural failure or corrosion and will void the warranty. We recommend maintaining an operational program that includes good housekeeping.

IOWA CITY, IOWA

THICKENER SECTION
PRESS SECTION

DE-WATERING BELTS

CHARTER MACHINE COMPANY shall warranty the de-watering belts for a belt life of four thousand five hundred (4500) hours operation at the rated design conditions from the date of substantial completion. This warranty shall include all parts including the belts and connecting clipper splices. This warranty covers belt damage caused by malfunction of the equipment but does not cover belt damage caused by inadequate belt washing, application of chemicals detrimental to polyester fabrics, application of heat detrimental to polyester fabrics, continued operation of the equipment after the alarm system has signaled a malfunction without clearing the cause of the malfunction, and intrusion of foreign objects including, but not limited to, tools, fasteners and stones.

IOWA CITY, IOWA

THICKENER SECTION
PRESS SECTION

ROLLS

CHARTER MACHINE COMPANY shall warranty the operation, structure and coating of the rolls for a period of three (3) years after substantial completion. Any roll found to be defective or inoperable shall be replaced or repaired. Physical damage to the equipment could cause structural failure or corrosion and will void the warranty. We recommend maintaining an operational program that includes good housekeeping.

IOWA CITY, IOWA

THICKENER SECTION
ROLL SUPPORT BEARINGS

CHARTER MACHINE COMPANY shall warranty the roll support bearings for the life of the unit. This warranty shall include all parts and labor for repairing or replacing any roll bearing that fails during that warranty period, providing that they have been properly lubricated as set forth in the lubrication schedule included with the Operation and Maintenance Manuals.

IOWA CITY, IOWA

PRESS SECTION
ROLL SUPPORT BEARINGS

CHARTER MACHINE COMPANY shall warranty the roll support bearings for a period of five (5) years from the date of substantial completion. This warranty shall include all parts and labor for repairing or replacing any roll bearing that fails during that warranty period, providing that they have been properly lubricated as set forth in the lubrication schedule included with the Operation and Maintenance Manuals.

IOWA CITY, IOWA

EQUIPMENT WARRANTY

CHARTER MACHINE COMPANY shall warranty its equipment to be free from defects in material and workmanship for a period of eighteen (18) months after final acceptance by Owner or substantial completion whichever comes later, provided any such defect as may appear is not the result of inadequate preventive maintenance. Upon receipt of notice from the Owner of failure of any part of the equipment during the warranty period, the affected part(s) shall promptly be replaced by, and at the expense of, CHARTER MACHINE COMPANY.

CHARTER MACHINE COMPANY

WARRANTY

TERMS and CONDITIONS

Charter Machine Company warrants that the equipment and components furnished will be and remain free from defects in workmanship and materials as stated in the warranties provided. Charter Machine Company will replace, modify or repair, any defective component or equipment, provided that Charter Machine is notified promptly in writing of any claimed defect and, if requested by Charter Machine, any part or component is returned to Charter Machine. All warranties offered by Charter Machine Company are based upon proper storage and installation. All warranties are based upon the proper operation and maintenance of the equipment as per the operation and maintenance manuals provided. Any damage due to misuse or utilizing the equipment in a manner for which it was not intended will void the warranty. Any unauthorized modification or alteration of the equipment or replacement of components may void the warranty. All equipment and components will be shipped in one lot by the lowest cost method and will be the responsibility of the owner. All repairs or shipments of parts will be provided during normal working hours, weekend, holiday or special arrangements must be coordinated through Charter Machine. The cost for replacement or repair by Charter Machine Company does not include: other consequential, incidental, special or other form of damages; costs or labor for removal or re-installation; and items over which Charter Machine has no control such as but not limited to structural alteration, demolition or building design or configuration.

This Page Intentionally Left Blank

TAB 3

This Page Intentionally Left Blank

IOWA CITY WWTP
IOWA CITY, IOWA

SPECIFICATIONS

GRAVITY BELT THICKENER/BELT FILTER PRESS

3-BELT COMBINATION

CHARTER MACHINE COMPANY

Model - 3BTP22.93S 2.2 Meter Belt Width

TABLE OF CONTENTS

SECTION	DESCRIPTION	PAGE
1.	GENERAL	3
2.	DESIGN CRITERIA	3
3.	GRAVITY BELT THICKENER MAIN FRAME	4
4.	FLOCCULATOR	5
5.	GRAVITY DEWATERING ZONE	5
6.	THICKENED CAKE DISCHARGE ZONE	6
7.	THICKENER ROLLERS	6
8.	THICKENER ROLLER BEARINGS AND SEALS	6
9.	THICKENER BELT TENSIONING	7
10.	THICKENER BELT TRACKING	7
11.	hydraulic CONTROL SYSTEM	7
12.	BELT WASH STATION	8
13.	FILTER BELT	8
14.	THICKENER DRIVE AND MOTOR	8
15.	FACTORY WIRING	8
16.	SAFETY FEATURES	8
17.	TOWER BELT FILTER PRESS MAIN FRAME	9
18.	WEDGE ZONE	9
19.	HIGH PRESSURE/SHEAR ZONE	10
20.	CAKE DISCHARGE ZONE	10
21.	HIGH PRESSURE ROLLERS	10
22.	HIGH PRESSURE ROLLER BEARINGS AND SEALS	11
23.	HIGH PRESSURE BELT TENSIONING	11
24.	HIGH PRESSURE BELT TRACKING	12
25.	BELT WASH STATIONS	12
26.	FILTER BELTS	12
27.	DRIVE MOTOR	13
28.	FACTORY WIRING	13
29.	SAFETY FEATURES	13
30.	UTILITY REQUIREMENTS	13
31.	ELECTRICAL CONTROL PANEL	14
32.	FIELD SERVICE	20

1. GENERAL

1.1 The Gravity Belt Thickener/Belt Filter Press furnished under this contract shall comply with the following specifications, which are based upon proven design. That design combines high strength structural integrity, extensive material longevity, minimal maintenance and utility requirements and state of the art process resulting in superior overall performance.

1.2 The Combination gravity belt thickener/belt filter press shall be of a three-belt design with three distinct dewatering zones, including an independent gravity-dewatering zone, wedge zone and a shear/pressure zone. The gravity zone shall be independent of the wedge zone and shear/pressure zone making it possible to select different dewatering belts and vary the speed of each area independently of the other for dual use purposes. The separation of the gravity and pressure areas shall optimize throughputs enhancing the hydraulic capacity of the press when processing diluted sludges. Each machine shall be designed to serve both as a belt press and also as an independent gravity belt thickener.

1.3 The combination 3-Belt Unit shall be designed, fabricated, assembled and tested by the belt filter press manufacturer in their own facility. In order to provide maximum quality assurance, personnel employed by the manufacturer shall perform all aspects of the design, fabrication and assembly. The belt filter press manufacturer shall at the same facility maintain a suitable spare parts inventory.

1.4 The belt filter press manufacturer is to have a minimum 20 years of experience in the development and manufacturing of Gravity Belt Thickeners and in the vertical arrangement of pressure rolls for the Belt Filter Presses.

1.5 The equipment shall be guaranteed against defects in material and workmanship under normal use and service for a period of one year after start-up not to exceed eighteen months after shipment during which time repairs or replacements shall be made without charge.

1.6 All equipment, which deviates from the following specifications, will be acceptable only on the basis that all costs associated with any revisions in the engineering or construction will be the responsibility of the contractor.

2. DESIGN CRITERIA

2.1 Number of 3-belt combination unit(s) required: (2)

2.2	Model	Belt Width Minimum	Width Overall	Length Overall	Height Overall
	3-Belt	2.2m	10’-6”	23’-11”	9’-7”

2.3 The Combination 3-Belt Unit(s) shall be Charter Machine Company Model: 3BTP22.93S

2.4 Each Gravity Belt Thickener/Belt Filter Press shall be capable of operating satisfactorily under the following performance conditions:

Description	Characteristics	
	BFP	GBT
Sludge Type	Anaerobically Digested Waste Activated	Anaerobically Digested Waste Activated
Number of units	2	2
Effective width of filter belt, meters	2.0	2.0
Average infeed solids, %	NA	1.6
Minimum hydraulic loading rate, gpm / meter		160
Minimum solids loading rate lbs. ds / hour	1,000	1,000
Minimum cake solids, %	20	NA
Minimum dry solids capture, %	95	95
Overall range of belt speed, ft / min.	3-20	10-75

3. GRAVITY BELT THICKENER MAIN FRAME

3.1 Main frame design is crucial as it is the support structure of the entire machine. The main frame shall be a box frame of welded and bolted MC channels conforming to ASTM Specification A36 and designed to accommodate all operating and static loads without significant deflection, deformation or vibration. Maximum operational loading shall be defined as the sum of the belt tension load based on a belt tension of 50 pli; friction loads; roller, equipment and sludge loads; any loads induced by the belts; and any loads induced by the torque of the drive. The pressure zone main beams shall have a moment of inertia of at least 60 inches to the fourth power. The frame safety factor shall be greater than 18.1. The maximum frame deflection shall be 0.0036 inches.

3.2 Main frame coating is crucial to the protection of the gravity belt thickener section. All frame members shall be prepared and coated according to ASTM A123, hot dip galvanized to a minimum 5-mil thickness. All frame members shall be drilled and machined prior to galvanizing and all bolted connections shall be disassembled prior to galvanizing.

3.3 All hardware used in assembly shall be ½" diameter, type 316 stainless steel minimum.

4. FLOCCULATOR

4.1 The gravity belt thickener shall be furnished with an upstream sludge-conditioning device consisting of an inline adjustable orifice venturi type mixer complete with polymer injection device. The mixer shall be designed to condition the sludge with polymer to result in a degree of flocculation that will produce the greatest amount of dewatering while maintaining the highest quality filtrate.

4.2 The inline mixer will have a 6 inch flanged connection and be constructed of 316 stainless steel. Also included will be a UHMW polyethylene injection ring, providing one complete unit.

4.3 Location of the inline mixer will vary with the application. Contractor shall provide spool pieces if indicated.

5. GRAVITY DEWATERING ZONE

5.1 The gravity-dewatering zone shall consist of a 12-foot section of the horizontal filter belt. The minimum dewatering area shall be, 82.9 square feet. The gravity dewatering zone shall be independent of the belt filter press section and be capable of operating in a thickening mode only, utilizing its own drive, tensioning and tracking systems.

5.2 A type 316 stainless steel head-box shall distribute sludge onto the horizontal dewatering belt.

5.3 The sludge shall be contained on the belt by type 316 stainless steel side channels with neoprene seals.

5.4 A grid of UHMW polyethylene wear bars shall support the dewatering belt. Each wear bar can be replaced on the type 316 stainless steel support structure without disassembly or removing any additional components.

5.5 Thickened sludge shall gently be turned by 75 individually adjustable sludge plows evenly spaced along ten (10) rows. The sludge plows shall be constructed of polyethylene and be free floating to ride on the filter belt.

5.6 Each row of plows shall be on a one-piece grid assembly. The plow assembly shall

be operated by using a hydraulic hand valve to enable the entire plow assembly to be raised from the filter belt for cleaning purposes.

6. THICKENED CAKE DISCHARGE ZONE

6.1 A counterweighted doctor blade shall be mounted at the discharge roller for removing sludge cake from the belt. The doctor blade shall be constructed of UHMW polyethylene. The blade shall be rigidly reinforced to provide even, gentle pressure on the belt with a minimal amount of abrasiveness and shall be capable of providing passage clearance for the belt seam without injuring that seam.

6.2 The thickener shall be capable of discharging thickened sludge into a screw conveyor for transfer or direct the thickened sludge into the pressure zone of the combination unit.

7. THICKENER ROLLERS

7.1 All rollers shall be designed for a deflection of less than 0.058” at mid span under conditions of maximum operational loading. Maximum operational loading shall be defined as the sum of the belt tension load; friction loads; equipment and sludge loads; any loads induced by the elasticity of the belt; and any loads induced by the torque of the drive. Minimum safety factor at center line of roll shall be 6.40, which is calculated using the belt tension of 50 PLI, and the drive torque of 6,670 inch pounds.

7.2 All rollers shall be of stub shaft design with each stub secured by an end plate and an internal bulkhead. Assembly of rollers, shafts, end plates, and bulkheads shall be of machined concentricity and by means of continuous weld.

7.3 The drive and tracking roller shall be coated with a minimum 3/8" thick synthetic rubber of 60 durometer to provide the friction required for efficient belt drive and tracking. The tensioning roller shall be coated to the point of insertion of the bearing with Rilsan Nylon II to a thickness of 25 mils by the Electro Static, Fusion Bonded Rilsan Powder Dispersion Process.

7.4 Minimum safety factor at roll shaft shall be 14.00.

8. THICKENER ROLLER BEARINGS AND SEALS

8.1 Roller bearings shall have an L-10 rating greater than 8,000,000 hours per AFBMA test procedure under maximum loading conditions and calculated at a belt speed of 60 feet per minute. All bearings shall be double row spherical roller type with all grease fittings located for servicing from the machine exterior. Bearings shall have quadruple lip contact seals.

8.2 All bearing housings shall be class 30 cast iron one-piece pillow block type with gasketed end cap as manufactured by Charter Machine Company. Bearing housings shall be coated with Rilsan Nylon II to a minimum thickness of 12 mils by the Electro Static, Fusion Bonded Rilsan Powder Dispersion Process.

8.3 All bearing pads and bearing housings shall be machined at the factory to guarantee proper alignment.

8.4 All roller bearings located on the thickening portion of the combination 3-belt unit shall be guaranteed for the life of the unit.

9. THICKENER BELT TENSIONING

9.1 Belt tensioning shall be maintained hydraulically and adjustable from the thickener mounted hydraulic manifold.

9.2 The dewatering belt shall be tensioned by a pair of corrosion resistant hydraulic cylinders attached to a rigid tensioning assembly. The tensioning assembly shall be attached to each tensioning cylinder in such a way as to assure parallel movement of the tensioning roller.

9.3 Belt tension adjustment shall be possible while the machine is in operation. Tensioning pressure shall be gauged at the hydraulic control center. Tensioning cylinders shall be power retractable for belt replacement and emergency detensioning.

10. THICKENER BELT TRACKING

10.1 Belt tracking shall be totally hydraulic and shall function as a continuous automatic belt guidance system. The belt shall be tracked by a type 316 stainless steel paddle arm and analog system sensor that monitors one edge of the belt and hydraulically signals a corrosion resistant hydraulic cylinder for corrective positioning when required. That corrective motion shall be smooth, minimal, and adjustable.

10.2 The belt tracking assembly shall be center pivoting complete with bearings to minimize dewatering belt stretch and wear.

11. HYDRAULIC CONTROL SYSTEM

11.1 All belt press hydraulic system controls; belt tensioning, belt tracking, doctor blade tensioning, and sludge plow lift shall be frame mounted on the thickener.

11.2 All hydraulic cylinders shall be rated for 400 PSI, non-shock with stainless steel rods and tie rods, and poly-pak seals.

11.3 Each variable volume vane pump / motor shall come mounted on the reservoir. The unit shall be complete with 10 gallon reservoir which includes pressure gauge, temperature gauge, ½" tank drain, suction strainer, and filter. The motor shall be 1.5 HP, TENV with 1.15 service factor.

12. BELT WASH STATION

12.1 The filter belt shall be equipped with a belt wash station for constant belt washing. The belt wash station shall include a manifold with removable stainless steel nozzles, internal hand wheel operated brush, hand wheel operated flush valve, and stainless steel neoprene skirted enclosure for containing spray mist. Belt spray water shall be collected in the stainless steel enclosure and plumbed to the base sump. Spray nozzles shall be suitable for use with non-potable water with a maximum solids concentration of 200 mg/l without clogging.

13. FILTER BELT

13.1 The filter belt shall be of polyester monofilament wovenware with minimum tensile strength of 890 pounds per lineal inch. Belt edges shall be chamfered and sealed. The belt seams shall be type 316 stainless steel clipper type. Mesh shall be selected for optimal gravity dewatering of the pertinent sludge.

13.2 Replacement of filter belt shall be accomplished without any disassembly of any part of the gravity belt thickener except the belt seam.

13.3 Belt life will be warranted for 4,500 hours.

14. THICKENER DRIVE AND MOTOR

14.1 The drive shall be Variable Frequency Drive using AC motor and quadruple gear speed reducer. The inverter along with start/stop and speed control of the drive shall be located in the master control panel.

14.2 The drive motor shall be a severe duty, TEFC, type motor of ample power for starting and operating under normal conditions without exceeding the nameplate horsepower. The drive motor shall have a service factor of 1.15.

14.3 All electrical controls for the gravity thickener shall be in the master control panel.

15. FACTORY WIRING

15.1 All equipment and components shall be factory wired using non-metallic, flexible liquid-tight conduit and fittings wired to numbered terminal blocks in a frame mounted NEMA 4X junction box.

Acceptable for local panel. Local panel shall include Estop and selector switches for Extend/Retract and Forward/ Reverse, all prewired to terminal blocks. Provide panel layout drawings.
-ZMC/SCI 20170816

16. SAFETY FEATURES

16.1 Each gravity belt thickener section [illegible] lanyard type safety switch with cable encircling the thickener at an easily accessible

height.

16.2 The belt tracking system shall have a limit switch on each side of the thickener that shall shut down the system in the event of belt tracking failure.

16.3 The belt tensioning system shall have a limit switch that shall shut down the system in the event of total belt failure.

16.4 Each hydraulic manifold shall have a pressure switch that shall shut down the system in the event of low hydraulic pressure.

17. TOWER BELT FILTER PRESS MAIN FRAME

17.1 Main frame design is crucial as it is the support structure of the entire machine. The main frame shall be a box frame of welded and bolted MC channels conforming to ASTM Specification A36 and designed to accommodate all operating and static loads without significant deflection, deformation or vibration. Maximum operational loading shall be defined as the sum of the belt tension load based on a belt tension of 50 pli; friction loads; roller, equipment and sludge loads; any loads induced by the belts; and any loads induced by the torque of the drive. The pressure zone main beams shall have a moment of inertia of at least 60 inches to the fourth power. The frame safety factor shall be 10.7 or greater. The maximum frame deflection shall be 0.010 inches.

17.2 Main frame coating is crucial to the protection of the press main frame. All frame members shall be prepared and coated according to ASTM A123, hot dip galvanized to a minimum 5-mil thickness. All frame members shall be drilled and machined, and all bolted connections shall be disassembled prior to galvanizing.

17.3 All hardware used in assembly shall be ½" diameter, type 316 stainless steel minimum.

18. WEDGE ZONE

18.1 The wedge zone shall be provided to transition the thickened sludge to the shear/pressure zone from the gravity zone. The wedge zone initiates the pressure on the sludge by converging the two belts to form the cloth/cake sandwich.

18.2 The wedge zone will be provided with a leveling bar and stainless-steel containment sides for even distribution along the entire width of the belt.

18.3 The wedge zone dewatering area shall be a minimum of 38.0 square feet as measured along the length of a single belt.

19. HIGH PRESSURE/SHEAR ZONE

19.1 The high pressure/shear zone shall consist of a minimum of eight (8) rollers. The first shall be a 1/4" thick perforated drum of 26" diameter with perforations of minimum 7/8" diameter and minimum 34% open area. The succeeding rollers shall be solid faced decreasing in diameter from 20" to 14" to 11" and arranged in a vertical configuration with belt to roller contact exceeding 205 degrees. The total high pressure dewatering area shall be a minimum of; 134.0 square feet as measured along the length of a single belt in contact with the pressure rolls.

20. CAKE DISCHARGE ZONE

20.1 Adjustable pneumatically loaded doctor blades shall be mounted at the discharge rollers for removing sludge cake from both belts. The doctor blades shall be power retractable and can be held away from the filter belts for cleaning and maintenance. The amount of pressure the doctor blades exert equally against both belts can be varied while the machine is operating. The adjustment of the doctor blades can be regulated from a hydraulic manifold located on the thickener section.

20.2 The doctor blades shall be made from UHMW polyethylene. The blades shall be rigidly reinforced to provide even gentle pressure on the belts with a minimal amount of abrasiveness and shall be capable of providing passage clearance for the belt seam without injuring the seam.

20.3 A 11-gauge type 316 stainless steel chute shall be provided to accommodate the method of removal.

21. HIGH PRESSURE ROLLERS

21.1 All rollers shall be designed for a maximum deflection of 0.063” at mid span under maximum loading conditions. Maximum loading shall be defined as the sum of the belt tension load at 50 pli; friction loads; equipment and sludge loads; any loads induced by the elasticity of the belts; and any loads induced by the torque of the drive. Minimum roll safety factor shall be 3.37 at mid span, with a minimum safety factor of 8.13 at shaft.

21.2 The perforated drum shall be of through shaft design with internal bulkhead and matched deflection of shaft and end plates. All other rollers shall be of stub shaft design with each stub secured by an end plate and an internal bulkhead. Assembly of rollers, shafts, end plates, and bulkheads shall be of machined concentricity and by means of continuous weld. The shaft inserted into the bearing shall be machined and polished to a diameter of 2.952 inches (75mm). In addition each stub shaft shall be held in place with a lock ring to guarantee alignment and eliminate any slippage or misalignment that can occur with tapered sleeves and tightening ring arrangements.

21.3 Drive rollers and tracking rollers shall be coated with a minimum 3/8" thick synthetic rubber of 60 durometer to provide the friction required for efficient belt drive and tracking. All other solid rollers shall be coated to the point of insertion of the bearing with Rilsan Nylon II to a thickness of 25 mils by the Electro Static, Fusion Bonded Rilsan Powder Dispersion Process.

21.4 The perforated drum shall be hot dip galvanized to a minimum thickness of 5 mils and shall be totally free of projections that may shorten belt life.

21.5 The pressure rollers shall be arranged vertically on alternating sides of the main pressure channel. The diameters of the rollers starting with the perforated roll shall decrease in size up through the vertical stack to the first of five 10 ¾" diameter rolls, with each roller separately pan drained to prevent rewetting of the sludge on the preceding rollers.

21.6 The perforated drum shall be fabricated from ¼" thick, 316 stainless steel. The carbon steel shaft shall be 3 ¾" dia. through the perforated roll and 2.952" dia. at the bearing. All other solid rollers shall be fabricated from A-53B with a minimum wall thickness of 1/2". The type CF1045 steel shaft shall be 3 ¾" dia. at the double end plates and 2.952" dia. at the bearing.

22. HIGH PRESSURE ROLLER BEARINGS AND SEALS

22.1 Roller bearings shall have an L-10 rating greater than, 820,000 Hours per AFBMA test procedure under maximum loading conditions as the sum of the belt tension load at 50 pli and calculated at a belt speed of 5 meters per minute. All bearings and grease fittings shall be located on the machine exterior for servicing and maintenance. All roller bearings shall be double row spherical. All bearings shall have quadruple lip contact seals. The contact surface of the shaft shall have a 60 micrometer polished finish to increase seal life

22.2 All bearing housings shall be class 30 cast iron one-piece pillow block type with end cap as manufactured by Charter Machine. Bearing housings shall be coated with Rilsan Nylon II to a thickness of 12 mils by the Electro Static, Fusion Bonded Rilsan Powder Dispersion Process.

22.3 All Tower Press roller bearings shall be guaranteed for five (5) years.

23. HIGH PRESSURE BELT TENSIONING

23.1 Belt tensioning shall be maintained hydraulically and controlled from the press mounted hydraulic manifold.

23.2 Each filter belt shall be tensioned by a pair of corrosion resistant hydraulic cylinders attached to a rigid tensioning assembly. The tensioning assembly shall be attached

to each tensioning cylinder in such a way as to assure parallel movement of the tensioning roller.

23.3 Each belt shall be tensioned individually, with capability of changes with the machine operating. Tensioning pressure shall be gauged at the hydraulic manifold. Tensioning cylinders shall be power retractable for belt replacement and emergency detensioning.

24. HIGH PRESSURE BELT TRACKING

24.1 Belt tracking shall be totally hydraulic and shall function as a continuous automatic belt guidance system. Each belt shall be tracked individually by a type 316 stainless steel paddle arm and analog system sensor that monitors one edge of the belt and pneumatically signals a corrosion resistant hydraulic cylinder for corrective positioning when required. That corrective motion shall be smooth, minimal, and adjustable.

24.2 Each belt tracking assembly shall be center pivoting complete with bearings to minimize dewatering belt stretch and wear.

24.3 Belt life will be warranted for 4,500 hours

25. BELT WASH STATIONS

25.1 Each filter belt shall be equipped with a belt wash station for constant belt washing. Each station shall include a manifold with removable stainless steel nozzles, internal hand wheel operated brush, hand wheel operated flush valve, and stainless steel neoprene skirted enclosure for containing spray mist. Belt spray water and flush water shall be collected in stainless steel pans and plumbed to the base sump to prevent rewatering of sludge process. Spray nozzles shall be suitable for use with non-potable plant effluent water with a maximum solids concentration of 200 mg/l without clogging.

26. FILTER BELTS

26.1 Filter belts shall be of polyester monofilament wovenware with minimum tensile strength of 890 pounds per lineal inch. Edges shall be chamfered and belt seams shall be type 316 stainless steel clipper type. Mesh shall be selected for optimal pressure dewatering of the pertinent sludge. Belts shall be self-threading under power for replacement.

26.2 Replacement of filter belts shall be accomplished without any disassembly of any part of the belt filter press except the belt joints.

27. DRIVE MOTOR

27.1 The belt drive shall be variable speed and shaft mounted on drive roll. The drive motor shall be severe duty TEFC of ample power for starting and operating under normal conditions without exceeding the nameplate horsepower and shall have a service factor of 1.15.

27.2 The drive shall be Variable Frequency Drive using AC motor and quadruple gear speed reducer. The inverter, start/stop and speed control of the drive shall be in the master control panel.

28. FACTORY WIRING

28.1 All equipment and components shall be factory wired using non-metallic, flexible liquid-tight conduit and fittings wired to numbered terminal blocks in a frame mounted NEMA 4X junction box.

29. SAFETY FEATURES

29.1 Each belt filter press shall be equipped with a lanyard type safety switch with cable encircling three sides of the press at an easily accessible height.

29.2 Each belt tensioning system shall have a limit switch that shall shut down the system in the event of total belt failure.

29.3 The belt tracking system shall have a limit switch on each side of the press that shall shut down the system in the event of belt tracking failure.

29.4 Each hydraulic manifold shall have a pressure switch that shall shut down the system in the event of low hydraulic pressure.

29.5 The wash water system shall have a pressure switch that shall shut down the system in the event of low water pressure.

30. UTILITY REQUIREMENTS

30.1 Electrical - 460 volt, 3 phase, 60 Hz

30.2 Power (HP)

GBT Drive	2.0
BFP Belt Drive	5.0
Hydraulic Pump	1.5

30.3 Belt Wash Water

Water @ 85 psi (min)

Dewatering mode: 105 gpm (thickener and press)

No PLC shall be provided; control shall be by existing SCADA, programmed by third-party. Back-panel (a.k.a. subpanel) with other control hardware accessories including starters shall be provided, for replacement in existing master BFP control panels. BFP VFDs shall be Allen Bradley PowerFlex 400 series; mounted to back-panel (interfaces shall mount in existing panel door). Back-panel dimension shall be 33"W x 57"H. For Master BFP control panel surface mounted hardware, provide as prewired with sufficient wire length to reach standard mounting locations.
-ZMC/SCI 20170816

30.4 Hydraulics 300 psi operating, 500 psi max.

31. ELECTRICAL CONTROL PANEL

Typical System Controls:

1. General Requirements: Each belt filter press shall be provided with a control panel that will contain the necessary control devices and equipment for controlling the dewatering process as described herein. The control panel shall meet the following general requirements:

   a. The control panel shall accept a 460 volts, 60 hertz, 3-phase ac power input. A main disconnect circuit breaker and operator mechanism shall be included. When the disconnect is in the open position, all power shall be removed from the control system.

   b. IEC rated motor starters shall be provided for the air compressor, belt wash water booster pump, cross conveyor, and the discharge conveyor.

   c. Variable frequency drive (VFD) shall be provided for the pressure belt drive and gravity belt drive. VFD for sludge feed pump and polymer pump can be supplied if specified.

   d. Short circuit protection for each motor shall be accomplished utilizing fuses. Individual thermal overload protection shall be provided (except for the belt drive and sludge feed pump).

   e. A control power transformer shall be included that will provide 120 volts, ac control power to the system.

Existing, located outside of panel. No OIT. -ZMC/SCI 20170816

   f. An industrial programmable logic controller (PLC) located in the control panel shall perform all logic functions for the system and interface with an Operator Interface Terminal (OIT).

   g. A CONTROL POWER ON/OFF switch shall be located on the front of the control panel. When in the ON position, the CONTROL POWER ON pilot light will be illuminated and control power shall be distributed to the control system. When in the OFF position, the control system shall be held de-energized.

   h. An EMERGENCY STOP pushbutton shall be located on the control panel. It shall be a mushroom head style pushbutton that when

depressed shall immediately de-energize all moving equipment in the system.

i. An alarm horn shall be included with the control panel for audible alarm annunciation along with a horn silencing button in the front of the panel.

j. Controls and drives for ancillary equipment will be provided and installed in the master control panel as specified.

2. Control and Pilot Devices: As a minimum, the following control and pilot devices shall be located within the screens of the (OIT)

No OIT shall be provided. -ZMC/SCI 20170816

a. Virtual Pushbuttons:

(1) AUTO START
(2) AUTO STOP
(3) SYSTEM RESET
(4) ALARM SILENCE
(5) WASHWATER PUMP START
(6) WASHWATER PUMP STOP
(7) BELT DRIVE START
(8) BELT DRIVE STOP
(9) GRAVITY BELT DRIVE START
(10) GRAVITY BELT DRIVE STOP
(11) SLUDGE PUMP START
(12) SLUDGE PUMP STOP
(13) POLYMER PUMP START
(14) POLYMER PUMP STOP
(15) CROSS CONVEYOR START
(16) CROSS CONVEYOR STOP

b. Virtual Selector Switches:

(1) PRESS HAND/OFF/AUTO MODE
(2) CONTROL POWER ON/OFF
(3) AIR COMPRESSOR ON/OFF
(4) DEWATERING MODE THICKENER/PRESS

c. Virtual Indicator Lights:

(1) PREWET CYCLE ON
(2) POSTWASH CYCLE ON
(3) AIR COMPRESSOR RUNNING
(4) WASHWATER PUMP RUNNING

(5) BELT DRIVE RUNNING
(6) GRAVITY BELT DRIVE RUNNING
(7) SLUDGE PUMP RUNNING
(8) POLYMER SYSTEM RUNNING
(9) CROSS CONVEYOR RUNNING
(10) LOW AIR PRESSURE
(11) BELT OVERTRAVEL
(12) BELT BROKEN

d. Virtual Speed Potentiometers:

(1) SLUDGE FEED PUMP SPEED (If required)
(2) BELT DRIVE SPEED
(3) GRAVITY BELT SPEED
(4) POLYMER PUMP SPEED (If required)

3. Signal Input and Output Devices:

a. Discrete Input Signals: The control panel can receive, if required and specified, the following discrete input signals from normally open dry contacts in external devices (contacts close when the equipment runs or a fault occurs):

(1) POLYMER PUMP RUNNING
(2) POLYMER PUMP FAIL
(3) SLUDGE FEED PUMP RUNNING
(4) SLUDGE FEED PUMP FAIL
(5) DISCHARGE CONVEYOR RUNNING
(6) DISCHARGE CONVEYOR FAIL

b. Discrete Output Signals: The control panel shall provide the following discrete signals for transmission using normally open dry contacts (contacts close when the equipment is called to run or a fault occurs):

(1) SYSTEM RUNNING
(2) SYSTEM FAULT

Programming documentation shall be provided for Owner/Contractor to integrate into existing PLC. -ZMC/SCI 20170816

4. Sequence of Operation: (THICKENING MODE)

a. Automatic Mode of Operation via OIT:

(1) Turn operation selector switch to the thickening position.

(2) The thickener may be operated in the automatic mode by placing the HAND/OFF/AUTO selector switch in the AUTO position. The operator will next turn the AIR COMPRESSOR SELECTOR SWITCH to the ON position and allow the pressure to reach normal operating level.

(3) After the air pressure has reached operating level, the operator will press the AUTO START pushbutton, this will energize the wash water booster pump and GRAVITY belt drive, illuminate the PREWET CYCLE ON pilot light and start the pre-wet time delay. After the pre-wet timer times out, the sludge pump, polymer system, cross conveyor and the discharge conveyor will be energized.

(4) Pressing the AUTO STOP pushbutton will de-energize the sludge pump and polymer pump, illuminate the WASHDOWN CYCLE ON pilot light and start a wash down time delay. After the wash down timer has timed out, the gravity belt drive, washwater pump, cross conveyor and discharge conveyor will be de-energized.

b. Manual Mode of Operation via OIT:

(1) To operate the press in the manual mode, the operator will place the HAND/OFF/AUTO selector switch in the HAND position. The operator will next turn the air compressor selector switch to the on position. After the air pressure has reached operating level, all components or drives can be started individually.

(2) The system will be stopped by pressing the respective STOP pushbutton for each drive or component.

5. Sequence of Operation: (PRESS MODE)

a. Automatic Mode of Operation via OIT:

(1) Turn operation selector switch to the Press position.

(2) The press may be operated in the automatic mode by placing the HAND/OFF/AUTO selector switch in the AUTO position. The operator will next turn the Air Compressor selector switch to the on position and allow the pressure to reach normal operating level.

Programming documentation shall be provided for Owner/Contractor to integrate into existing PLC.
-ZMC/SCI 20170816

(3) After the air pressure has reached operating level, the operator will press the AUTO START pushbutton, this will energize the washwater booster pump belt drive and gravity belt drive, illuminate the PREWET CYCLE ON pilot light and start the pre-wet time delay. After the pre-wet timer times out, the sludge pump and polymer pump will be energized. (The cross conveyor remains off.)

(4) Pressing the AUTO STOP pushbutton will de-energize the sludge pump and polymer pump, illuminate the WASHDOWN CYCLE ON pilot light and start a washdown time delay. After the washdown timer has timed out, the gravity belt drive, washwater pump and cross conveyor will be de-energized.

b. Manual Press Mode of Operation via OIT

(1) To operate the press in the manual mode, the operator will place the HAND/OFF/AUTO selector switch in the HAND position. The operator will next turn the air compressor selector switch to the ON position. After the air pressure has reached operating level, all components or drives can be started individually.

(2) The system will be stopped by pressing the respective STOP pushbutton for each drive or component.

6. Faults:

a. When any of the following fault conditions occur, in automatic or manual mode, the appropriate fault messages will appear in the Alarm Screen, the alarm horn will sound and the belt filter press and associated equipment will be de-energized:

(1) LOW AIR PRESSURE
(2) BELT OVERTRAVEL
(3) BELT BROKEN
(4) LOW POLYMER if specified
(5) BOOSTER PUMP FAULT
(6) GRAVITY BELT DRIVE FAULT
(7) GRAVITY BELT DRIVE
(8) SLUDGE PUMP FAULT
(9) CROSS CONVEYOR FAULT

Provide back-panel only. White color.
-ZMC/SCI 20170816

7. Components:

a. Enclosures: Control panel enclosures shall be free-standing, fabricated of type 304 stainless steel and shall be suitable for NEMA 4X service. Enclosures shall be manufactured by Saginaw Manufacturing.

b. Wiring: All power and control wiring shall be 600 volt, type MTW insulation stranded copper and shall be sized for the required load, 18 AWG minimum.

c. Circuit Breakers: Circuit breakers for the main disconnect shall be thermal magnetic molded case units. Circuit breakers shall be ABB type

d. Motor Starters: Motor starters shall be full voltage, nonreversing, IEC style across-the-line units. Coils shall be 120 volts ac. Siemens type Sirius 3RT10.

e. Selector Switches: All selector switches shall be heavy duty, corrosion resistant units rated for NEMA 4X service. Contact blocks shall be rated for 10-ampere continuous service. Selector switches shall be Idec Series TWTD.

f. Pushbuttons: All pushbuttons shall be heavy duty, corrosion resistant units rated for NEMA 4X service. Contact blocks shall be rated for 10-ampere continuous service. Pushbuttons shall be Idec Series TWTD.

g. Pilot Lights: Pilot lights shall be heavy duty, corrosion resistant units rated for NEMA 4X service. Units shall be 120 VAC full voltage incandescent type. Pilot lights shall be Idec Series TWTD.

h. Terminal Blocks: Terminal blocks shall be high density, solderless box lug style, with 600-volt rating. Terminal blocks shall be Allen Bradley type 1492.

i. Control Relays: Control relays shall be general purpose type with a 10 amp contact rating, miniature square base and internal on status pilot light. Relays shall be IDEC RY series.

See other comments on PLC.
-ZMC 20170816

j. Programmable Logic Controller (PLC): The PLC shall be a modular type with discrete and analog capabilities. The CPU shall have 6K minimum RAM for user instructions. The PLC shall be an Allen Bradley Micrologix Type.

No OIT.
-ZMC/SCI
20170816

k. Operator Interface Terminal (OIT): The OIT shall be an Allen Bradley Panel View Plus 1000 Compact with a display size of 211 x 158 mm 640 x 480 resolution. Operator input shall be touch Screen. The unit will incorporate Ethernet, RS-232 and (2) USB ports for communication. The power requirement shall be 18-30 VDC. Operating environmental temperature 0-55 C (32-131F). NEMA rating 4X.

l. Variable Frequency Drive (VFD): The VFD shall be UL listed and shall be manufactured by Control Techniques.

VFDs shall be Allen Bradley PowerFlex 400 series.
-ZMC/SCI 20170816

32. FIELD SERVICE

The manufacturer shall include the services of a factory-trained representative for the purposes of installation inspection, equipment start-up and training of plant personnel regarding proper operation and maintenance of the equipment.

TAB 4

This Page Intentionally Left Blank

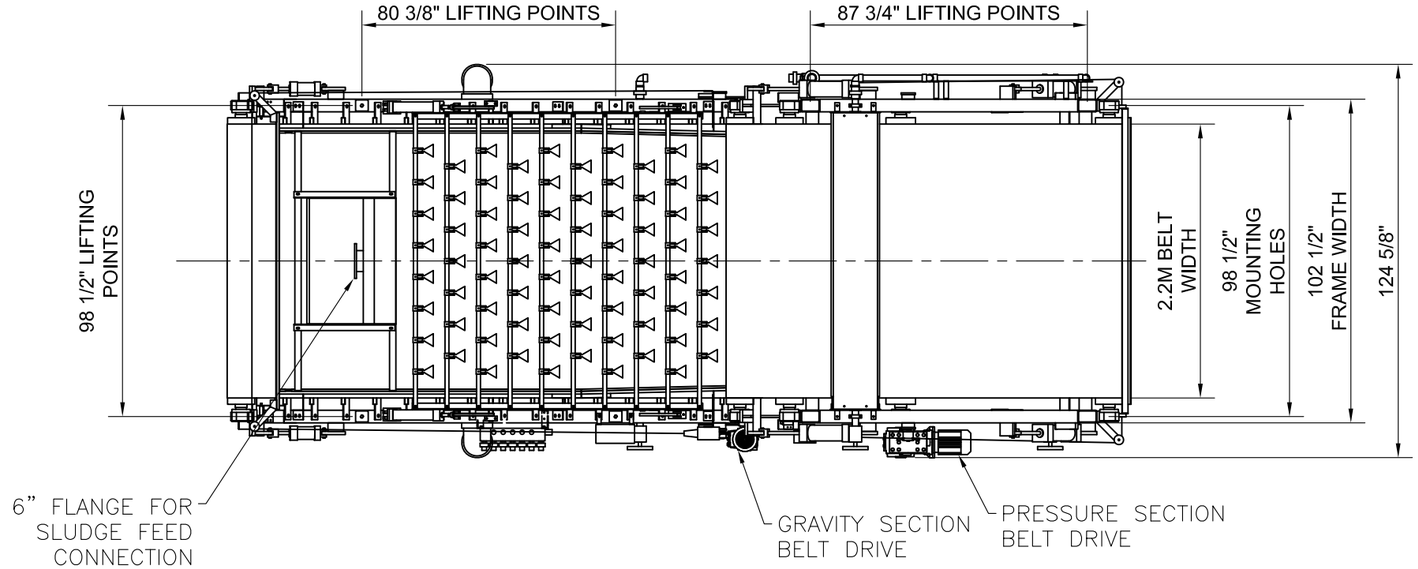

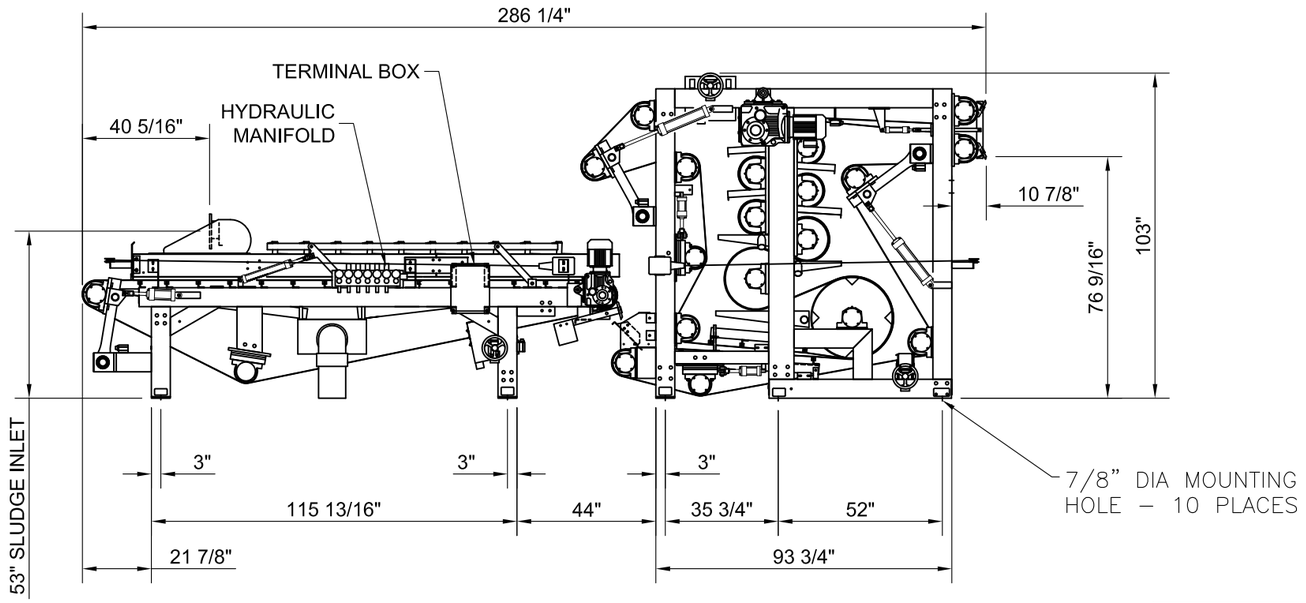

NOTES:

LOCATION OF PLANT WATER CONNECTION FOR BELT WASH SYSTEM VARIES ACCORDING TO LOCATION OF WASH WATER BOOSTER PUMP AND USE OF OPTIONAL WASH WATER RECYCLE.

LIFTING POINTS ARE MIN. 1 1/4" DIA FOR ALL LOCATIONS.

GBT SECTION DRY WEIGHT = 5,900 LBS.
GBT SECTION WET WEIGHT = 7,100 LBS.

PRESSURE SECTION DRY WEIGHT = 14,350 LBS.
PRESSURE SECTION WET WEIGHT = 15,900 LBS.

DRAWN TMP	12/20/11
APPROVED	

G.E.C. TOLERANCES UNLESS OTHERWISE SPECIFIED

FRACTIONAL DIM ±1/64
DECIMAL DIM ±.005
ANGLE ± 1/2
SURFACE FINISH 125

CHARTER MACHINE COMPANY
55 WESTER AVE METUCHEN N.J. 08840

TITLE
3-BELT TOWER PRESS 22.93S
HYDRAULIC MACHINE VIEWS

SIZE	DWG NO.	REV
B	3BTP22.93S-22	0

SCALE 1/4" = 1'-0" SHEET 1 OF 1

This Page Intentionally Left Blank

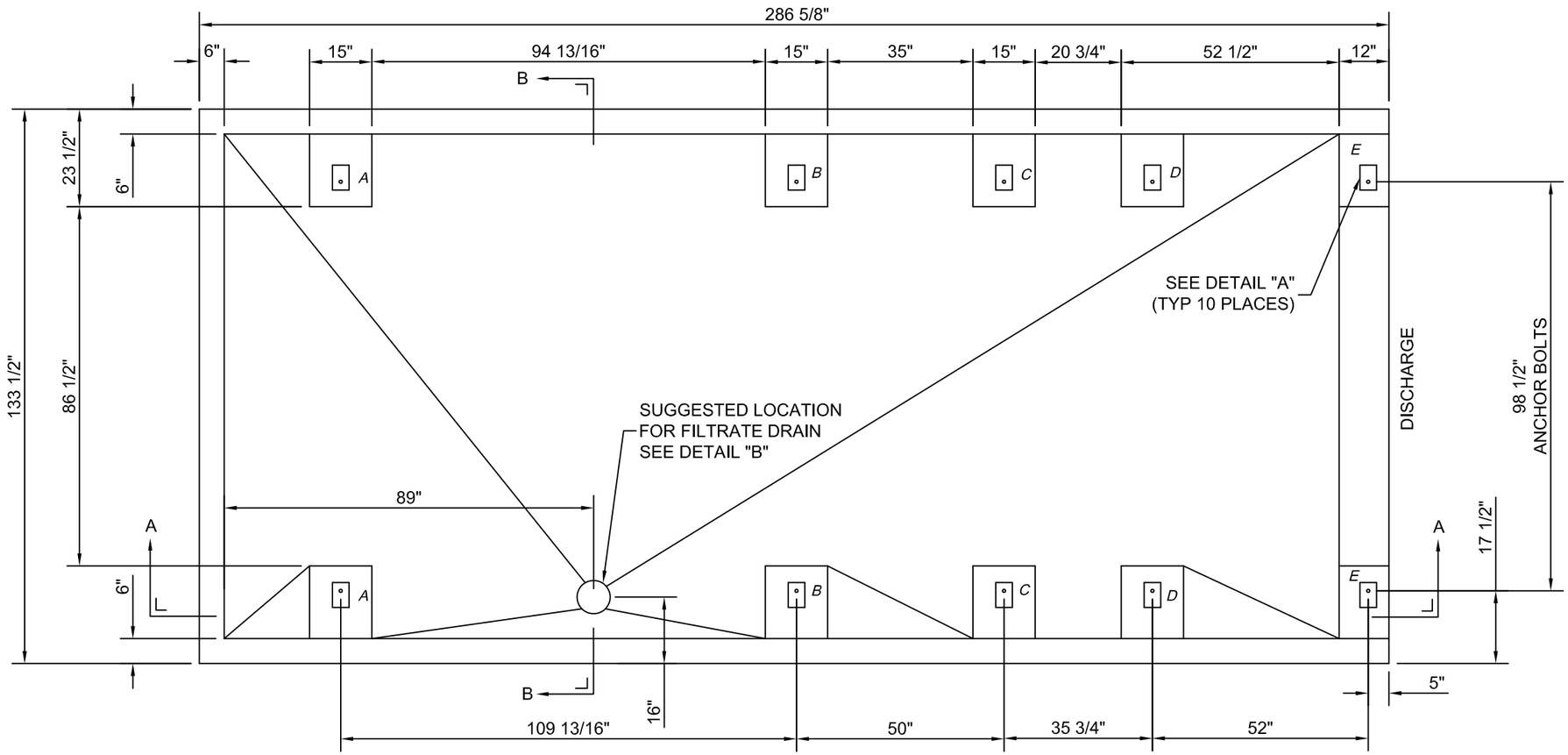

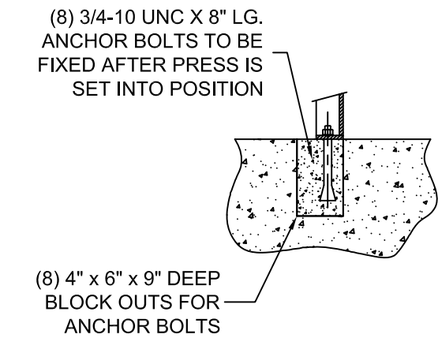

DETAIL "A"

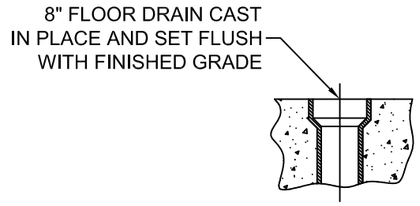

DETAIL "B"

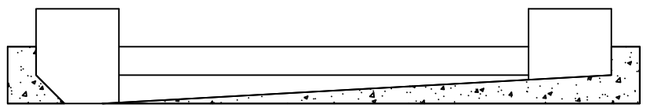

SECTION B-B

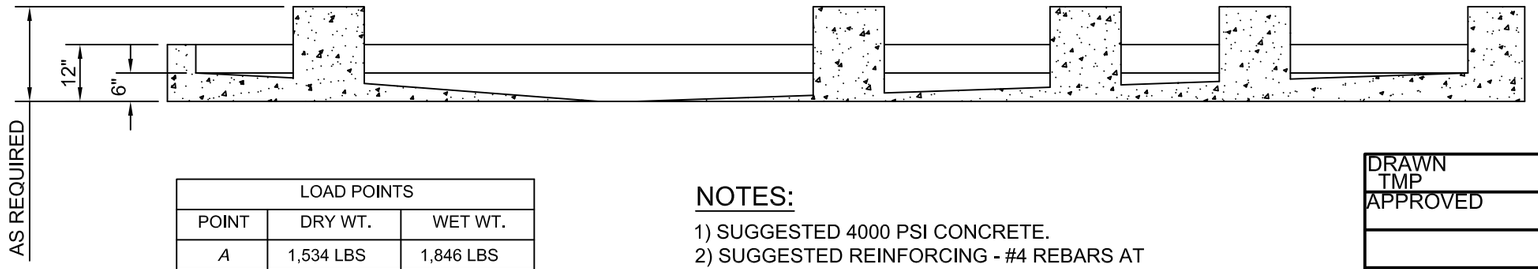

LOAD POINTS		
POINT	DRY WT.	WET WT.
A	1,534 LBS	1,846 LBS
B	1,416 LBS	1,704 LBS
C	1,435 LBS	1,590 LBS
D	2,870 LBS	3,200 LBS
E	2,870 LBS	3,160 LBS

NOTES:

1) SUGGESTED 4000 PSI CONCRETE.
2) SUGGESTED REINFORCING - #4 REBARS AT
   12" TOP AND BOTTOM BOTH DIRECTIONS.
3) SLOPE FLOOR TOWARDS DRAIN.
4) TOTAL WEIGHT OF GBT SECTION = 5,900 LBS. DRY
   7,100 LBS WET
   TOTAL WEIGHT OF PRESSURE SECTION = 14,350 LBS. DRY
   15,900 LBS. WET

DRAWN TMP	7/13/10
APPROVED	

G.E.C. TOLERANCES UNLESS OTHERWISE SPECIFIED

FRACTIONAL DIM ±1/64
DECIMAL DIM ±.005
ANGLE ± 1/2
SURFACE FINISH 125

CHARTER MACHINE COMPANY
55 WESTER AVE METUCHEN N.J. 08840

TITLE
3-BELT TOWER PRESS 22.93S
FOUNDATION

SIZE		DWG NO.	REV
B		3BTP22.93S-03	2

SCALE 3/8" = 1'-0" SHEET 1 OF 1

This Page Intentionally Left Blank

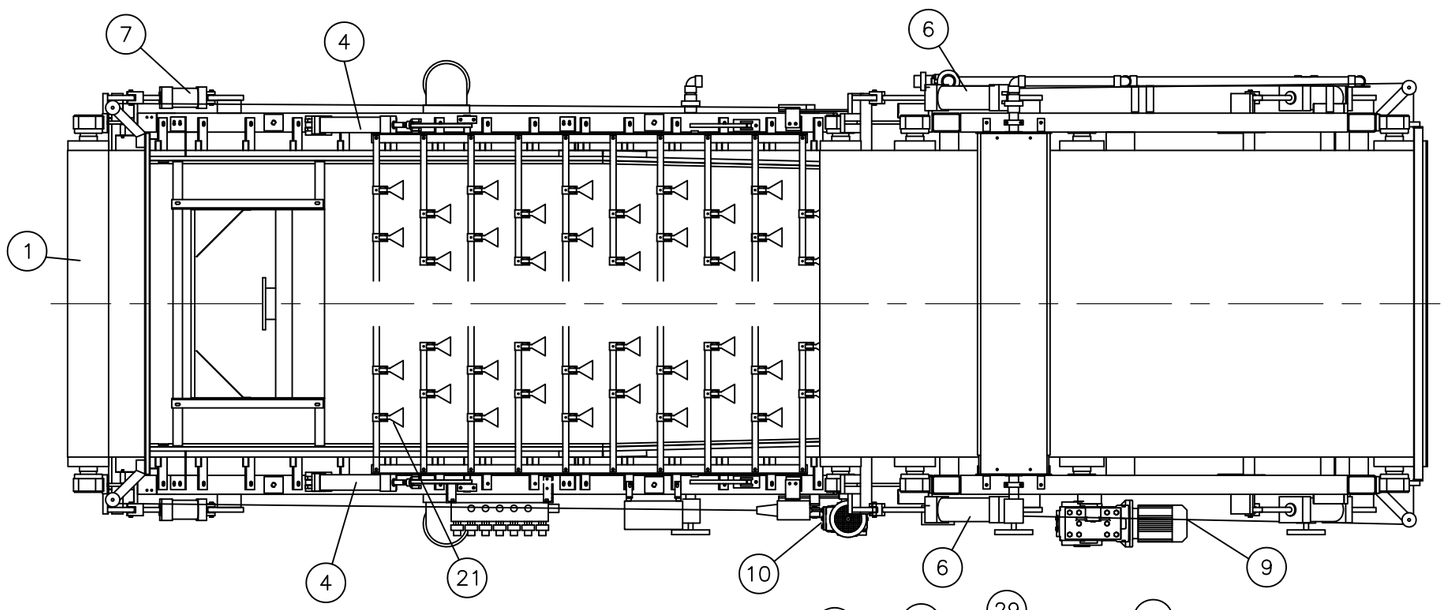

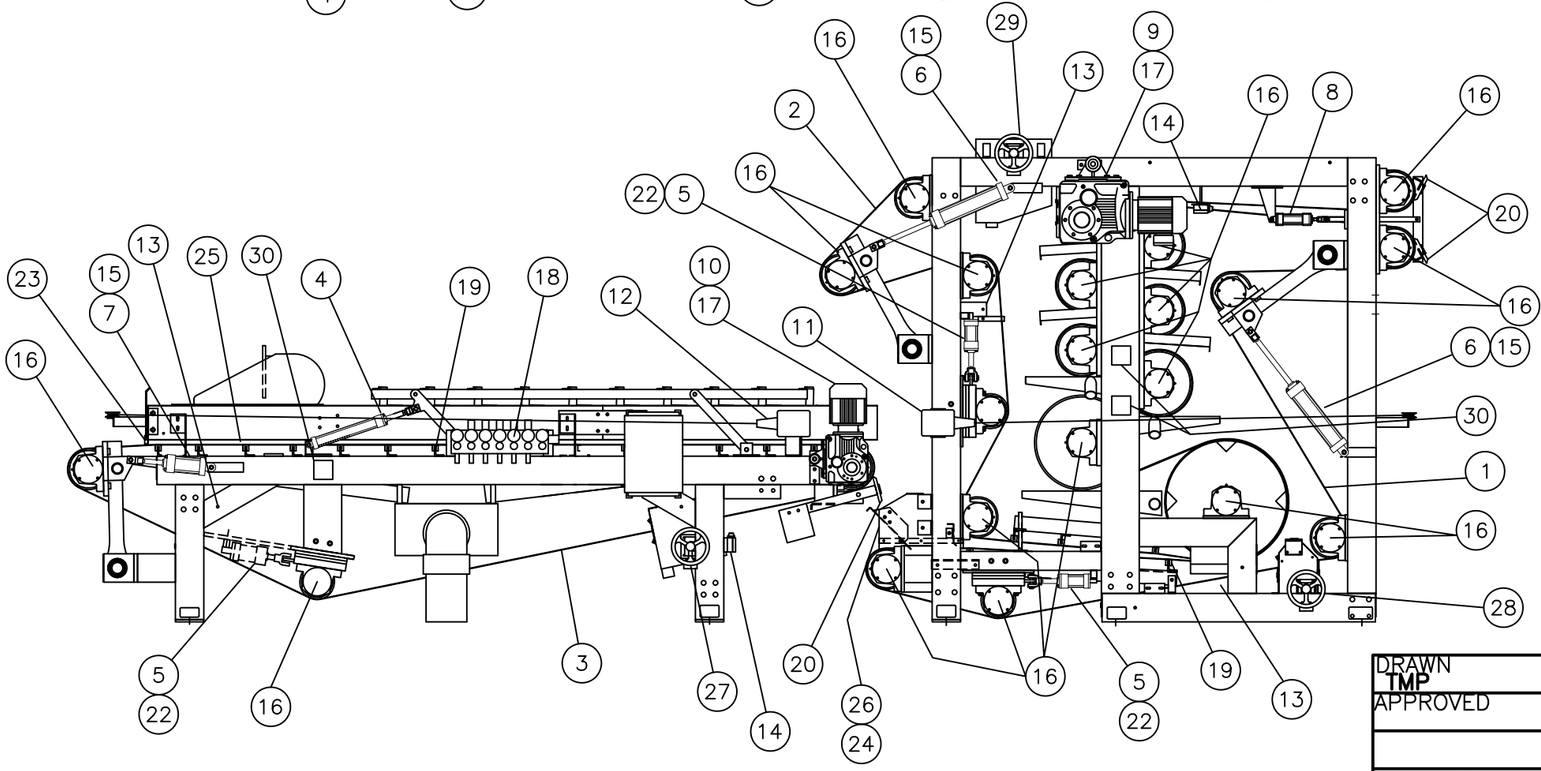

DRAWN TMP	5/10/12
APPROVED	

G.E.C. TOLERANCES UNLESS OTHERWISE SPECIFIED

FRACTIONAL DIM	±1/64
DECIMAL DIM	±.005
ANGLE	± 1/2
SURFACE FINISH	125

CHARTER MACHINE COMPANY
55 WESTER AVE METUCHEN N.J. 08840

TITLE
3 BELT TOWER PRESS 00.93S
HYDRAULIC MACHINE
PARTS DRAWING

SIZE	DWG NO.	REV
B	3BTP00.93S-27	1

SCALE NOT TO SCALE SHEET 1 OF 1

This Page Intentionally Left Blank

3BTP 22.93S – Hydraulic Parts List

ITEM	QTY	PART NUMBER	DESCRIPTION
1	1	050-016-7646	Filter Belt (Bottom)
2	1	050-016-7646	Milling Belt (Top)
3	1	050-036-3146	Gravity Belt
4	2	TRDHYDCYL2X12	2" x 12" Plow Lift Cylinder
5	3	TRDHYDCYL2.5X2	2 1/2" x 2" Steering Cylinder
6	4	TRDHYDCYL3.25X12	3 1/4" x 12" Tension Cylinder
7	2	TRDHYDCYL3.25X4	3 1/4" x 4" Tension Cylinder
8	2	TRDHYDCYL1.5X3	1 1/2” x 3” Doctor Blade Cylinder
9	1		Belt Drive (Press Section) – See Belt Drive Section
10	1		Belt Drive (Gravity Area) – See Belt Drive Section
11	1	035-225-0347	Safety Stop – Lanyard Switch (Right Hand)
12	1	035-225-0247	Safety Stop – Lanyard Switch (Left Hand)
13	3	035-225-0175	Steering Switch
	3	035-221-0176	Adjustable Rod Lever
	3	TP00.43S-A-044	Paddle Arm
14	4	035-225-0175	Belt Over-Travel Switch
	4	TP00.43S-A-043	Paddle Arm
15	3	710-000-009	Belt Break Switch
16	42	TP00.43S-B-2952/1	75mm Pillow Block Roller Bearing - Complete (Closed)
	1 each	FAG 22215E1A.M.C3	75mm Roller Bearing Insert
	1 each	BH-F-2952-1	75mm Pillow Block Housing
	1 each	BC-2952	75mm Bearing End Cap (Closed)
	2 each	National #417492	Double Lip Oil Seal (Closed)
	1 each	WHM-500	Bearing Retaining Ring (Housing)
	1 each	WSM-293	Bearing Retaining Ring (Shaft)
	1 each	CG2437-1	Bearing Housing Cap Gasket
	4 each		Socket Cap Screw
	4 each		#10 Neoprene Bonded Washer
	1 each		Grease Fitting
	1 each		Pressure Relief Vent

3BTP 22.93S – Hydraulic Parts List

ITEM	QTY	PART NUMBER	DESCRIPTION
17	2	TP00.43S-B-2952/2	75mm Pillow Block Roller Bearing - Complete (Drive)
	1 each	FAG 22215E1A.M.C3	75mm Roller Bearing Insert
	1 each	BH-F-2952-1	75mm Pillow Block Housing
	1 each	BC-2952-M	75mm Bearing End Cap (Thru)
	4 each	National #417492	Double Lip Oil Seal
	1 each	WHM-500	Bearing Retaining Ring (Housing)
	1 each	CG2437-1	Bearing Housing Cap Gasket
	1 each	BP22.61-A-003	Drive Shaft Sleeve
	1 each	McMaster #9452K158	O-Ring
	4 each		Socket Cap Screw
	4 each		#10 Neoprene Bonded Washer
	1 each		Grease Fitting
	1 each		Pressure Relief Vent
18	1	HA62164	Hydraulic Manifold
19	25	TP22.43S-B-007/1	UHMW Belt Support Wear Strips
20	3	TP22.43S-B-003	UHMW Doctor Blade
21	75	TP00.43S-C-106	Sludge Plow
22	6	TP00.43S-A-001	Steering Slider Block
23	1	TP22.43S-B-007/2	Sludge Guide Cross Wall Seal
24	2	3BTP00.93S-A-003	Wedge Zone Seal
25	2	3BTP00.93S-A-001	Sludge Guide Seal
26	1	3BTP22.93S-A-001	Sludge Chute Seal
27	1	025-191-1387	Belt Wash Spray Pipe - Gravity Belt
	4	RB822.3-A-101	Gravity Section Seal – Gravity Belt
	1	27449-RB-16-316L	Internal Brush
	19	27149-6012-316L	.099" Wash Nozzles with Gasket
28	1	025-191-1387	Belt Wash Spray Pipe – Filter Belt
	1	TP22.93S-B-004/1	Wash Station Seal #1 – Filter Belt
	1	TP22.93S-B-004/2	Wash Station Seal #2 – Filter Belt
	2	BP00.61-B-025	Upper Spray Shower Seal – Filter Belt
	1	27449-RB-16-316L	Internal Brush
	19	27149-6012-316L	.099" Wash Nozzles with Gasket

3BTP 22.93S – Hydraulic Parts List

ITEM	QTY	PART NUMBER	DESCRIPTION
29	1	025-191-1487	Belt Wash Spray Pipe – Milling Belt
	6	BP22.61-A-001/3	Lower Wash Station Seal – Milling Belt
	2	BP00.61-B-025	Upper Spray Shower Seal – Milling Belt
	2	TP22.43S-B-007/2	Cross Wall Seal – Milling Belt
	1	27449-RB-16-316L	Internal Brush
	19	27149-6012-316L	.099" Wash Nozzles with Gasket
30	3	SV1-10-4-0-00	Solenoid Valve
	3	02-168235	Valve Body
	3	300AA00085A	Coil

This Page Intentionally Left Blank

TAB 5

This Page Left Blank Intentionally

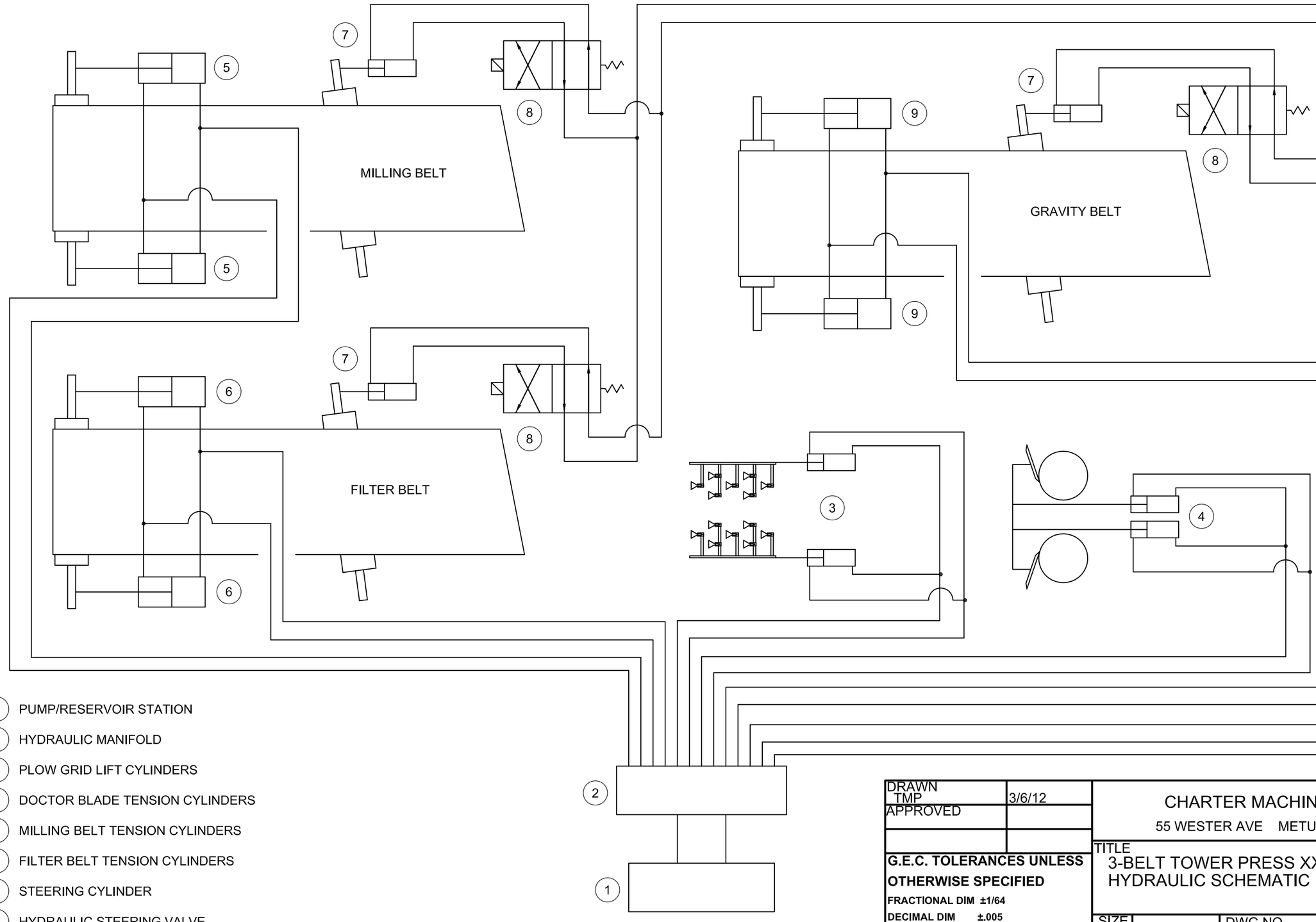

1. PUMP/RESERVOIR STATION
2. HYDRAULIC MANIFOLD
3. PLOW GRID LIFT CYLINDERS
4. DOCTOR BLADE TENSION CYLINDERS
5. MILLING BELT TENSION CYLINDERS
6. FILTER BELT TENSION CYLINDERS
7. STEERING CYLINDER
8. HYDRAULIC STEERING VALVE
9. GRAVITY BELT TENSION CYLINDERS

DRAWN TMP	3/6/12
APPROVED	

G.E.C. TOLERANCES UNLESS OTHERWISE SPECIFIED

FRACTIONAL DIM ±1/64
DECIMAL DIM ±.005
ANGLE ± 1/2
SURFACE FINISH 125

CHARTER MACHINE COMPANY
55 WESTER AVE METUCHEN N.J. 08840

TITLE
3-BELT TOWER PRESS XX.93S
HYDRAULIC SCHEMATIC

SIZE		DWG NO.	REV
B		TP00.93S-25	1

SCALE NOT TO SCALE SHEET 1 OF 1

This Page Intentionally Left Blank

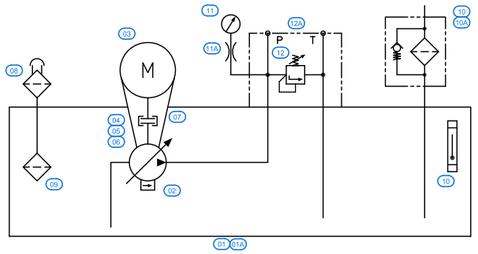

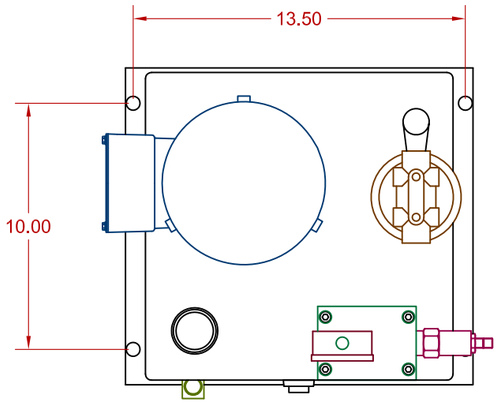

ITEM #	QUANTITY	DESCRIPTION	SOURCE
01	1	V215146SS 10 GALLON 304-SS RESERVOIR	LDI
01A	1	99920SS RESERVOIR LID 304-SS	LDI
02	1	VDS-0B-1A3-E11 VARIABLE DISPLACEMENT PUMP	NACHI
03	1	VWDM-3554 1.5 HP, 1750 RPM, 230/460 VAC, WASHDOWN DUTY MOTOR	BALDOR
04	1	37240 PUMP SHAFT COUPLING - L075-5/8-5/32	LDI
05	1	10692 MOTOR SHAFT COUPLING - L075-7/8-3/16	LDI
06	1	L075-SOX SHAFT COUPLING INSERT	LDI
07	1	152399 MOTOR-PUMP ADAPTER	LDI
07A	1	268599 ADAPTER GASKET	LDI
08	1	MBR110 FILLER / BREATHER	EATON / VICKERS
09	1	P562245 FILLER STRAINER - PEC-8-3/4-100	DONALDSON
10	1	P561134 RETURN FILTER HEAD	DONALDSON
10A	1	P562198 RETURN FILTER ELEMENT	DONALDSON
11	1	25-901-1000PSI/KPA 1000-PSI PRESSURE GAUGE	NOSHOK
11A	1	1325 GAUGE SNUBBER	NOSHOK
12	1	RV10-20A-0-N-12 RELIEF VALVE CARTRIDGE	HYDRAFORCE
12A	1	20080307 MANIFOLD BLOCK	MAGNALOY

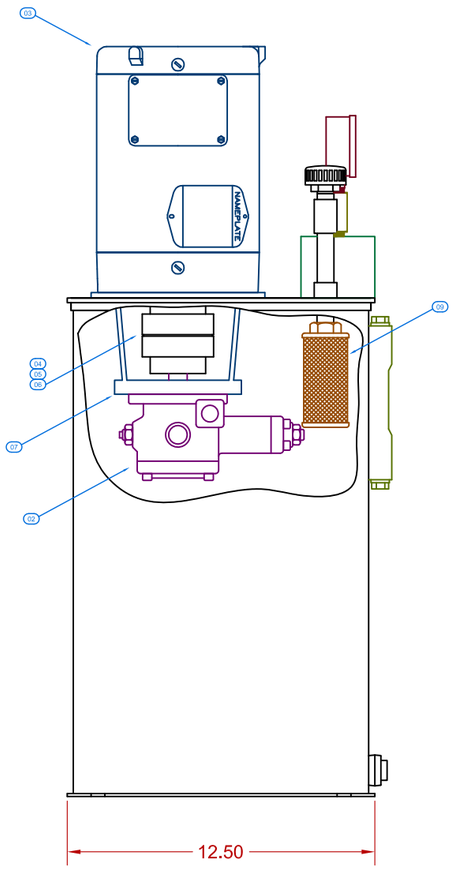

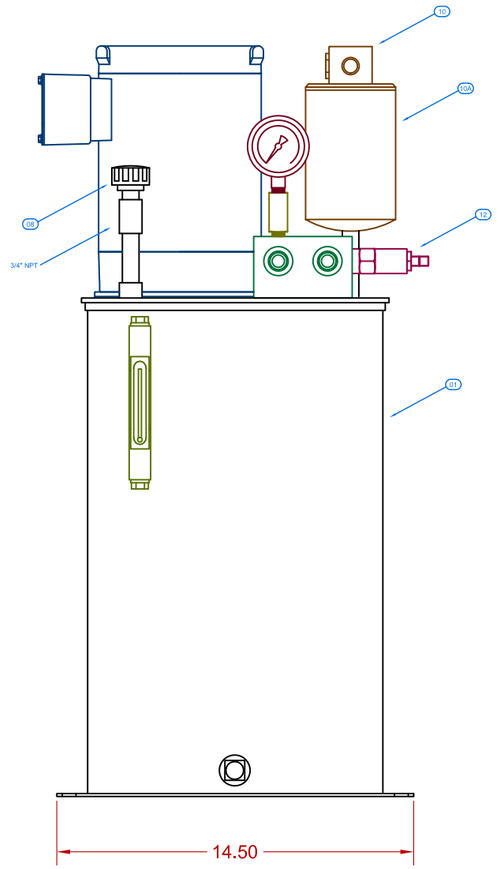

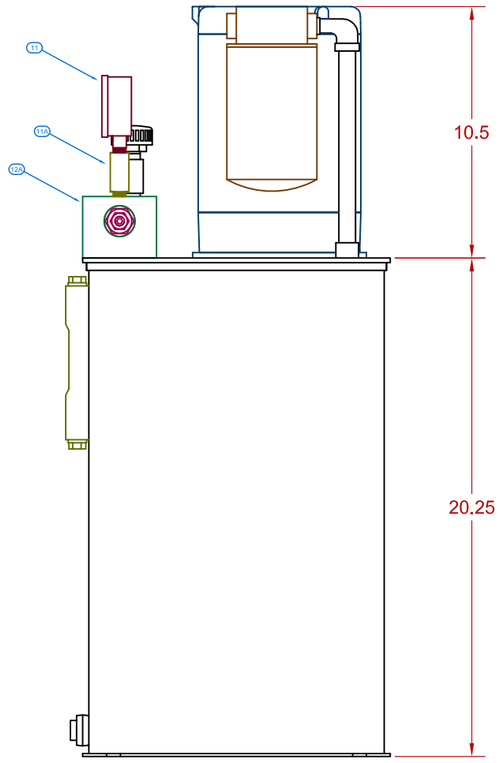

THIS DRAWING IS NOT TO BE CONSIDERED COMPLETE AND ACCURATE UNLESS SIGNED BY ONE OR MORE ENGINEERS.

THIS DRAWING CONTAINS INFORMATION PROPRIETARY TO HYDROAIR DEES. IT IS SUBMITTED IN CONFIDENCE AND IS TO BE USED SOLELY FOR THE PURPOSE FOR WHICH IT IS FURNISHED AND RETURNED UPON REQUEST. THIS DRAWING AND SUCH INFORMATION IS NOT TO BE REPRODUCED, TRANSMITTED, DISCLOSED, OR USED OTHERWISE, IN WHOLE OR IN PART, WITHOUT THE AUTHORIZATION OF HYDROAIR DEES.

ENGINEER: H BLACKBURN	SIGNATURE	DATE	
CHECKED BY: H BLACKBURN	SIGNATURE	DATE	
CUSTOMER ACCEPTANCE	SIGNATURE	DATE	
DRAFTER: HUGH BLACKBURN		DATE: 01/16/12	

HydroAir Dees
An APPLIED® fluid power company
1809 Fashion Court
Suite 110
Joppa, MD 21085
(410) 679-1666
(410) 679-1162

Certified ISO 9001 compliant.

NOT TO SCALE

THIRD ANGLE PROJECTION

SHOP

TITLE: GRAPHIC EQUIPMENT CORP / CHARTER MACHINE COMPANY HYDRAULIC POWER UNIT		DRAWING NUMBER: HA62322	SIZE: D
DRAWING FILE NUMBER: HA62322....DWG	CAPACITY: 10 GALLON	P.O. NUMBER: 0000000000 / PRODUCTION ORDER NUMBER: 0000000000	SYSTEM NUMBER: HA62322

SHEET 1 OF 1

This Page Intentionally Left Blank

Vertical Style

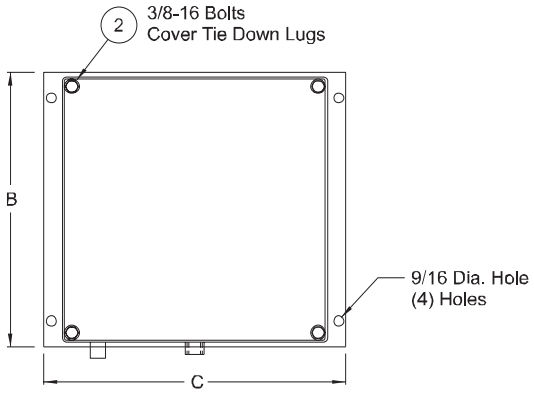

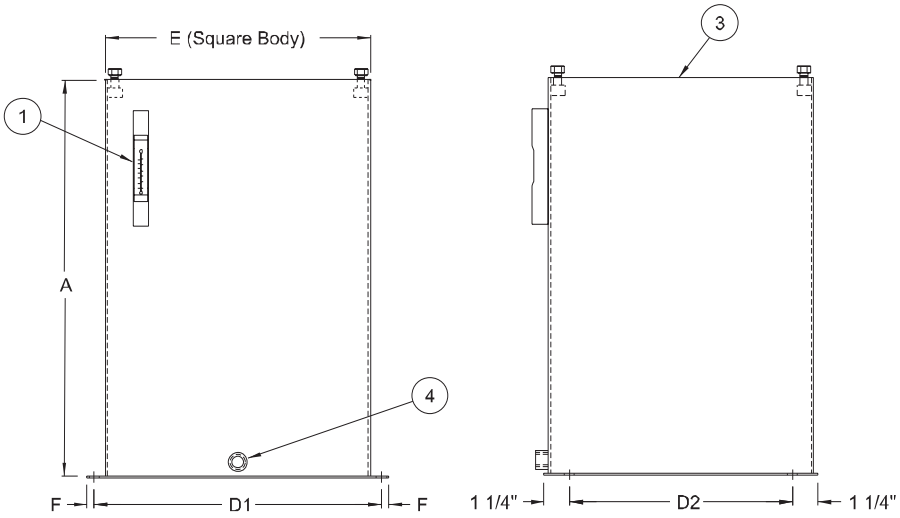

Each Vertical Non-J.I.C. Reservoir includes:

1. (1) Oil Level & Temp. Gauge
2. (4) Cover Mounting Bolts
3. Channel gasket for cover plate seal
4. (1) 1/2" NPT Drain
5. Steel construction with customer choice of top
6. Exterior of reservoir prime painted
7. Interior of reservoir coated with rust preventive oil

Sight Gauge

5 to 30 gallon - 5" sight gauge (ALG5T)

NOTE: Cover Plate ordered as separate item
(see page 20)

Sight Gauge shipped loose inside reservoir, Filler Breather included with cover plate

Capacity Gallons	Vescor Part Number	Tank Dimensions (inches) A	B	C	Mounting Centers D_1 ±1/8"	D_2 ±1/8"	E	F	Shipping Weight
~~5~~	~~**215145**~~	~~10"~~	~~12 1/2"~~	~~14 1/2"~~	~~13 1/2"~~	~~10"~~	~~12"~~	~~1/2"~~	~~30#~~
10	**215146**	19 11/16"	12 1/2"	14 1/2"	13 1/2"	10"	12"	1/2"	45#
~~10~~	~~**215147**~~	~~11 3/4"~~	~~16 1/2"~~	~~19"~~	~~17 1/2"~~	~~14"~~	~~16"~~	~~3/4"~~	~~50#~~
20	**215148**	23 11/16"	16 1/2"	19"	17 1/2"	14"	16"	3/4"	66#
30	**215149**	35 11/16"	16 1/2"	19"	17 1/2"	14"	16"	3/4"	86#

*Weights do not include covers

NOTE: WITH VESCORS' POLICY OF CONSTANTLY IMPROVING ITS PRODUCTS, SPECIFICATIONS ARE SUBJECT TO CHANGE WITHOUT NOTICE.

COVER PLATES

ORDERING INFORMATION

VESCOR Vertical Non-JIC Reservoirs allow you to choose the style cover plate for your individual needs.
Reservoir and Cover Plate must be ordered as separate items. Please use Part Number when ordering.
NOTE: Filler Breathers are included with cover plates only

99937
COVER PLATE PART NUMBER

Example:
Cover Plate for 10 Gallon Non-JIC Reservoir (215147) with 56C/145TC Adapter Cutout (Style 1)

Reservoir Part Number	Standard Dimensions for Vertical Tops A (SQ)	B	C	D	E (Adapter Cutout)
215145	12 1/2"	2 1/2"	6 1/4"	5"	Cutout for 56C/145TC Adapter (Style 1, 1A, 1B)
215146	12 1/2"	2 1/2"	6 1/4"	5"	Cutout for 182TC/256TC Adapter (Style 7)
215147	16 1/2"	2 1/2"	8 1/4"	5 1/2"	Cutout for 56C/145TC Adapter (Style 1, 1A, 1B)
215148	16 1/2"	2 1/2"	8 1/4"	5 1/2"	Cutout for 182TC/256TC Adapter (Style 7)
215149	16 1/2"	2 1/2"	8 1/4"	6 1/4"	Cutout for 182TC/256TC Adapter (Style 6)

*See page 131 to 136 for adapter styles

Series 1 Cover Plates (215145, 215146)

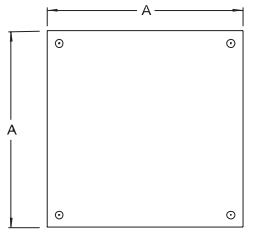

Blank Cover
Part Number 99920

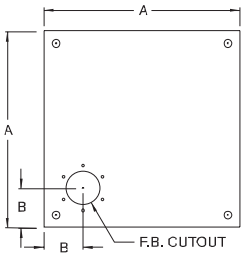

Cover with
Filler Breather Cutout
Part Number 99923

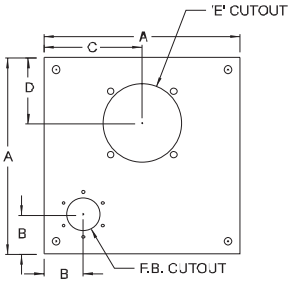

Cover with
Filler Breather Cutout and
56C/145TC Adapter Cutout
(Adapter Style 1, 1A, 1B)
Part Number 99926

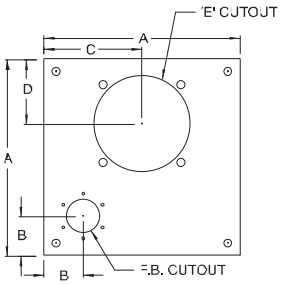

Cover with
Filler Breather Cutout and
182TC/256TC Adapter Cutout
(Adapter Style 7)
Part Number 99929

Series 2 Cover Plates (215147, 215148, 215149)

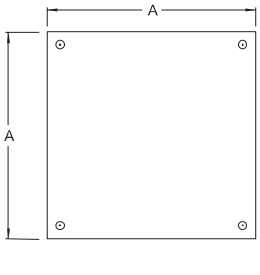

Blank Cover
Part Number 99931

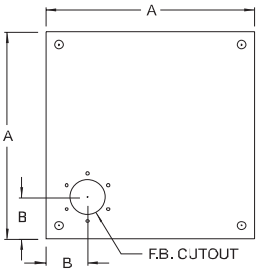

Cover with
Filler Breather Cutout
Part Number 99934

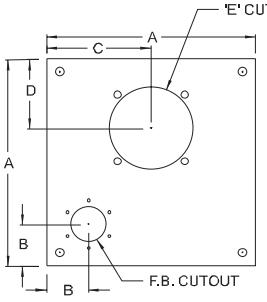

Cover with
Filler Breather Cutout and
56C/145TC Adapter Cutout
(Adapter Style 1, 1A, 1B)
Part Number 99937

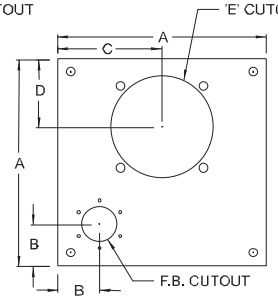

Cover with
Filler Breather Cutout and
182TC/256TC Adapter Cutout
(Adapter Style 7)
Part Number 99940

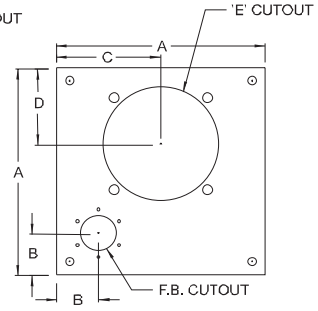

Cover with
Filler Breather Cutout and
182TC/256TC Adapter Cutout
(Adapter Style 6)
Part Number 99943

Cover Plate Part Number	Description	Series
99920	Blank Cover	1
99923	Cover with Filler Breather Cutout	1
99926	Cover with 56C/145TC Adapter Cutout	1
99929	Cover with 182C/256TC Adapter Cutout	1

Note: All cover plates include Filler Breather bayonet style 40 micron (5201)

Cover Plate Part Number	Description	Series
99931	Blank Cover	2
99934	Cover with Filler Breather Cutout	2
99937	Cover with 56C/145TC Adapter Cutout	2
99940	Cover with 182C/256TC Adapter Cutout	2
99943	Cover with 182C/256TC Vert. Adapter Cutout	2

Suction Strainers

Flow Range: 0-300 *gpm* / 0-1,140 *lpm*

Outlet Port Size: 3/8" NPT to 4" NPT

- Stainless Steel Mesh
- Steel or nylon fittings
- Operating temperatures:
  Steel fitting to 250°F / 121°C
  Nylon fitting to 210°F / 100°C
- Relief valve available

Features

Donaldson suction strainers are zinc-plated, with stainless steel mesh screens and rugged steel core centers epoxy bonded to heavy gauge connector and end caps. Suction strainers filter petroleum-based hydraulic fluids, phosphate esters, water glycols, lubricating oils, coolants, fuels and water in fluid reservoirs, sumps and similar applications. They are cleanable and reusable. Clean by swishing in non-caustic solvent, then blow dry from inner diameter to outer diameter with compressed air.

SEC (Steel Fitting) 200-300

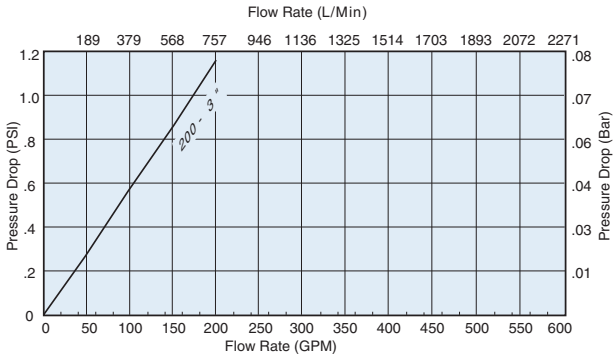

PEC (Nylon Fitting) 3-100

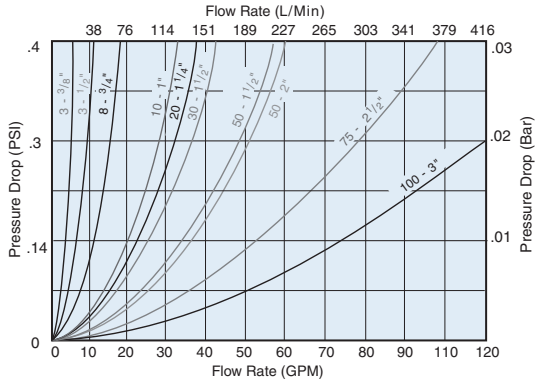

SEH/SEC (Steel Fitting) 3-100

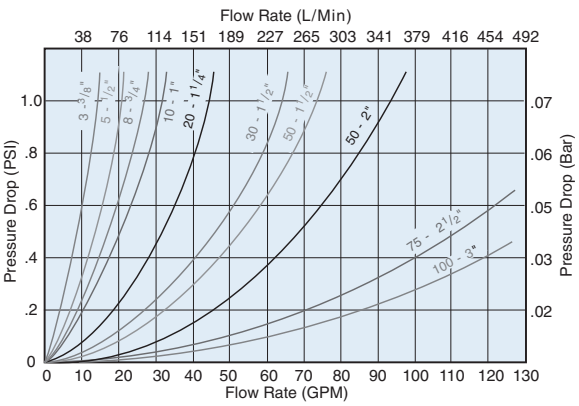

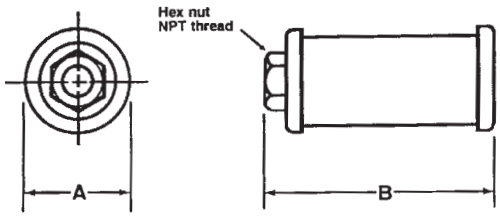

Note: PEC and SEH model strainers have hex nut style outlet fittings. SEC model strainers have pipe coupling style (round) outlet fittings. All styles have NPT threads inside.

Donaldson FILTRATION SOLUTIONS

Suction Strainer Choices

	Donaldson Part No.	Description	Relief Valve Setting	Outlet Pipe Size	Wire Mesh Size	Dim. A (in./mm)	Dim. B (in./mm)	Screen Area (sq. in./sq. cm)	Max. Flow (gpm/lpm)
NYLON FITTING	~~P562235~~	~~PEC-3-3/8-100~~	~~n/a~~	~~3/8" NPT~~	~~100~~	~~1.9/48~~	~~2.7/69~~	~~20/129~~	~~3/11~~
	P562240	PEC-5-1/2-100	n/a	1/2" NPT	100	1.9/48	4.3/109	25/161	5/19
	~~P562245~~	~~PEC-8-3/4-100~~	~~n/a~~	~~3/4" NPT~~	~~100~~	~~2.7/69~~	~~4.3/109~~	~~40/258~~	~~8/30~~
	P562246	PEC-8-3/4-100-RV3	3 psid/0.2 bar	3/4" NPT	100	2.7/69	4.3/109	40/258	8/30
	P562244	PEC-8-1-100	n/a	1" NPT	100	2.7/69	4.3/109	40/258	8/30
	P562226	PEC-10-1-100	n/a	1" NPT	100	2.7/69	5.6/142	70/452	10/38
	P562227	PEC-10-1-100-RV3	3 psid/0.2 bar	1" NPT	100	2.7/69	5.6/142	70/452	10/38
	P562228	PEC-20-1.1/4-100	n/a	1-1/4" NPT	100	3.4/86	5.6/142	128/826	20/75
	P562229	PEC-20-1.1/4-100-RV3	3 psid/0.2 bar	1-1/4" NPT	100	3.4/86	5.6/142	128/826	20/75
	P562231	PEC-20-1.1/4-200	n/a	1-1/4" NPT	200	3.4/86	5.6/142	128/826	20/75
	P562232	PEC-30-1.1/2-100	n/a	1-1/2" NPT	100	3.4/86	5.6/142	128/826	30/113
	P562233	PEC-30-1.1/2-100-RV3	3 psid/0.2 bar	1-1/2" NPT	100	3.4/86	5.6/142	128/826	30/113
	P562236	PEC-50-1.1/2-100	n/a	1-1/2" NPT	100	4/102	8/203	200/1290	50/188
	P562237	PEC-50-1.1/2-100-RV3	3 psid/0.2 bar	1-1/2" NPT	100	4/102	8/203	200/1290	50/188
	P562238	PEC-50-2-100	n/a	2" NPT	100	4/102	10.4/264	200/1290	50/188
	P562239	PEC-50-2-100-RV3	3 psid/0.2 bar	2" NPT	100	4/102	10.4/264	200/1290	50/188
	P562242	PEC-75-2.1/2-100	n/a	2-1/2" NPT	100	5.2/132	8.5/216	316/2039	75/282
	P562243	PEC-75-2.1/2-100-RV3	3 psid0.2 bar	2-1/2" NPT	100	5.2/132	8.5/216	316/2039	75/282
	P562223	PEC-100-3-100	n/a	3" NPT	100	5.2/132	11.5/292	379/2445	100/376
	P562224	PEC-100-3-100-RV3	3 psid/0.2 bar	3" NPT	100	5.2/132	11.5/292	379/2445	100/376
	P562225	PEC-100-3-100-SST	n/a	3" NPT	100	5.2/132	11.5/292	379/2445	100/376
STEEL FITTING	P562221	SEH-3-3/8-100	n/a	3/8" NPT	100	1.9/48	2.5/64	34/219	3/11
	P169012	SEH-5-1/2-100	n/a	1/2" NPT	100	2.63/67	3.1/79	62/400	5/19
	P563305	SEH-5-1/2-100-RV3	3 psid/0.2 bar	1/2" NPT	100	2.7/69	3.1/79	62/400	5/19
	P169013	SEH-8-3/4-100	n/a	3/4" NPT	100	2.63/67	3.55/90	68/439	8/30
	P173910	SEH-8-3/4-100-RV3	3 psid/0.2 bar	3/4" NPT	100	2.63/67	3.55/90	68/439	8/30
	P169014	SEH-10-1-100	n/a	1" NPT	100	2.63/67	5.35/136	110/710	10/38
	P173911	SEH-10-1-100-RV3	3 psid/0.2 bar	1" NPT	100	2.63/67	5.35/136	110/710	10/38
	P169015	SEH-20-1.1/4-100	n/a	1-1/4" NPT	100	3.38/86	6.85/174	162/1045	20/75
	P173912	SEH-20-1.1/4-100-RV3	3 psid/0.2 bar	1-1/4" NPT	100	3.38/86	6.85/174	162/1045	20/75
	P169016	SEH-30-1.1/2-100	n/a	1-1/2" NPT	100	3.38/86	8.01/203	225/1452	30/113
	P173913	SEH-30-1.1/2-100-RV3	3 psid/0.2 bar	1-1/2" NPT	100	3.38/86	8.01/203	225/1452	30/113
	P169017	SEH-50-1.1/2-100	n/a	1-1/2" NPT	100	3.94/100	9.8/249	340/2194	50/188
	P173914	SEH-50-1.1/2-100-RV3	3 psid/0.2 bar	1-1/2" NPT	100	3.94/100	9.8/249	340/2194	50/188
	P562222	SEH-50-1.1/2-60	n/a	1-1/2" NPT	60	3.94/100	9.8/249	340/2194	50/188
	P169018	SEH-50-2-100	n/a	2" NPT	100	3.94/100	9.8/249	340/2194	50/188
	P173915	SEH-50-2-100-RV3	3 psid/0.2 bar	2" NPT	100	3.94/100	9.8/249	340/2194	50/188
	P169019	SEC-75-2.1/2-100	n/a	2-1/2" NPT	100	5.12/130	10.1/257	400/2581	75/282
	P173916	SEC-75-2.1/2-100-RV3	3 psid/0.2 bar	2-1/2" NPT	100	5.12/130	10.1/257	400/2581	75/282
	P169020	SEC-100-3-100	n/a	3" NPT	100	5.12/130	11.78/299	500/3226	100/376
	P173917	SEC-100-3-100-RV3	3 psid/0.2 bar	3" NPT	100	5.12/130	11.78/299	500/3226	100/376
	P562211	SEC-100-3-60	n/a	3" NPT	60	5.12/130	11.78/299	500/3226	100/376
	P562212	SEC-100-3-60-RV3	3 psid/0.2 bar	3" NPT	60	5.12/130	11.78/299	500/3226	100/376
	P562213	SEC-200-3-100	n/a	3" NPT	100	8.1/206	11.3/287	965/6226	200/752
	P562214	SEC-300-4-100	n/a	4" NPT	100	8.1/206	15/381	1370/8839	300/1128
	P171861	FIOA 20	n/a	G3/8"	90	2.05/52	3.03/77	29/184	2.7/10
	P171869	FIOA 50	n/a	G¾"	90	2.95/75	3.74/95	54/348	6.6/25
	P171877	FIOA 90	n/a	G1"	90	2.95/75	5.55/141	86/554	12.0/45
	P171885	FIOA 130	n/a	G1¼"	90	3.74/95	7.24/184		17.3/65
	P171889	FIOA 175	n/a	G1½"	90	5.51/140	4.45/113	183/1178	22.6/85

SP15/25
Max Flow: 30 gpm (114 lpm)

Donaldson FILTRATION SOLUTIONS

SP15/25 Spin-On Filters

Maximum Working Pressures to:	150 *psi* 1034 kPa 10.3 bar
Rated Static Burst to:	375 *psi* 2590 kPa 25.9 bar
Flow Ranges to:	30 *gpm* 114 *lpm*

Features

The SP15/25 series are economical, low pressure filters with spin-on convenience and a wide range of cleanliness ratings. Filters are available with the bypass ratings of your choice – 25 psi, 15 psi, 5 psi or no bypass. Take advantage of our mix and match system of in-stock heads and filters, so you can get exactly what you need. Choose the media type and configuration that's best for your application. Options include Donaldson's exclusive Synteq™, natural fiber cellulose, stainless steel wire-mesh or water absorbing media.

Beta Rating
- Performance to $ß_{6(c)}$=1000

Porting Size Options
- ½", ¾" NPT
- SAE-8, -12 O-ring

Replacement Filter Lengths
- Synteq™ 5.35" / 136 *mm*; 7.87" / 200 *mm*
- Cellulose 5.35" / 136 *mm*; 7.87" / 200 *mm*
- Wire Mesh 5.35" / 136 *mm*
- Water Removal 5.35" / 136 *mm*

Standard Bypass Ratings
- 25 *psi* / 172.5 kPa / 1.7 bar
- 15 *psi* / 97 kPa / .97 bar
- 5 *psi* / 34.5 kPa / .34 bar
- No Bypass

Assembly Weight
- 5.35": 1.6 lbs / .7 kg (approximately)
- 7.87": 2.2 lbs / 1 kg (approximately)

Operating Temperatures
- -20°F to 225°F / -27°C to 107°C

Collapse Ratings
- 100 *psid* / 690 kPa / 6.9 bar (standard)

SP15/25 Specification Illustrations

Assembly - Side View

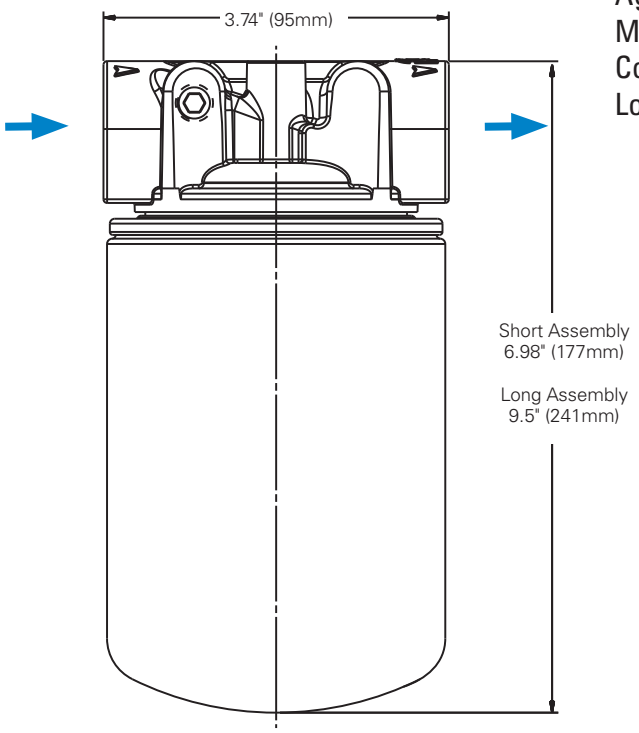

Applications:

In-Plant Systems
Agriculture Equipment
Mining
Construction
Logging

Head - Top View

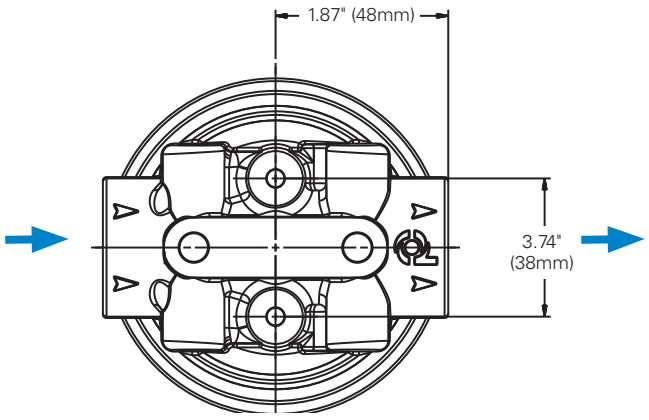

SP15/25
Max Flow: 30 gpm (114 lpm)

Donaldson FILTRATION SOLUTIONS

SP15/25 Components
Filter Choices

Media Type	$Beta_{x(c)}$=200 Rating	$Beta_{x(c)}$=1000 Rating	Length (in./mm)	Donaldson Part No.	Comments
Synteq Media # 1		5 µm	5.35/136	P564967	Synthetic Media
Synteq Media # 2		9 µm	7.87/200	P564357	Synthetic Media
Synteq Media # 2-1/2		10 µm	5.35/136	P560693	Synthetic Media
Synteq Media # 2-1/2		10 µm	7.87/200	P179089	Synthetic Media
Synteq Media # 9		23 µm	5.35/136	P560694	Synthetic Media
Cellulose Media # 10		23 µm	5.35/136	P551551	
Cellulose Media # 10		23 µm	7.87/200	P565059	
Cellulose Media # 3		24 µm	5.35/136	P565061	
Cellulose Media # 25	32 µm		5.35/136	P551553	
Cellulose Media # 25	32 µm		7.87/200	P565060	
Water Absorbing Media	32 µm		5.35/136	P565062	Absorbs Approx. 6 oz/170 ml of water @ 20 psid/1.4 bar
Wiremesh Media # 149	150 µm		5.35/136	P550274	100 mesh

* Thread size 1"-12 UNF

Head Choices

Port Size	Bypass Range	Gauge ports (drill, tap, plug)	Gauge Port Location	Donaldson Part No.
½" NPT	15 psi / 103.4 kPa / 1.34 bar	(2) 1/8" NPT	upstream side	P563288
¾" NPT	25 psi / 172.5 kPa / 1.72 bar	(2) 1/8" NPT	upstream side	P561131
¾" NPT	5 psi / 34.5 kPa / .34 bar	(2) 1/8" NPT	downstream side	P561132
¾" NPT	25 psi / 172.5 kPa / 1.72 bar	none	na	P561134
¾" NPT	5 psi / 34.5 kPa / .34 bar	none	na	P561135
¾" NPT	none	none	na	P561136
¾" NPT	15 psi / 103.4 kPa / 1.34 bar	none	na	P563278
SAE-12	none	none	na	P561133
SAE-12	none	(1) SAE-4	upstream side, LH	P561137
SAE-12	5 psi / 34.5 kPa / .34 bar	none	na	P561140
SAE-12	25 psi / 172.5 kPa / 1.72 bar	none	na	P561141
SAE-12	15 psi / 103.4 kPa / 1.34 bar	none	na	P563279
SAE-12	25 psi / 172.5 kPa / 1.72 bar	(2) 1/8" NPT	upstream side	P563280
SAE-12	15 psi / 103.4 kPa / 1.34 bar	none	M6 mtg. threads	P563287
SAE-8	25 psi / 172.5 kPa / 1.72 bar	none	na	P561138

Mix and Match

Donaldson's mix and match system provides the great performance and functional advantages of custom-engineered filters with the convenience and speedy delivery of in-stock parts. Choose your options and build a filter model to suit your specifications.

This Page Intentionally Left Blank

VDS, VDR & VDC SERIES
VARIABLE VOLUME, PRESSURE COMPENSATED VANE PUMPS.

Features

- 143 to 2000 PSI PRESSURE RANGES
- QUIET and EFFICIENT OPERATION
- 4.0 to 31.7 GPM at 1800 RPM
- FAST RESPONSE, APPROXIMATELY 60ms on stroke, 90ms off stroke
- SUBPLATE and SAE MOUNTING
- TANDAM PUMP ARRANGEMENTS

VDS SERIES

VDR SERIES

VDC SERIES

Index

VDS SERIES, 4.0 GPM @ 1800 RPM/1000 PSI MAX P-4
VDR SERIES, 7.9 to 10.6 GPM @ 1800 RPM/2000 PSI MAX P-7
VDC SERIES, 7.9 to 31.7 GPM @ 1800 RPM/2000 PSI MAX P-12

VDS Series

SMALL VARIABLE VOLUME VANE PUMP

Features

1. Precision machining technology provides efficient operation and low dead head power loss.
2. Quiet operation even at high pressure. The use of journal bearings and improved design of the suction and pressure ports significantly reduce noise levels.
3. Simple, compact design.
4. Quick response.
5. Excellent performance and long service life is assured. Strict material selection, improved heat treatment techniques, and high precision machining technology provide for pumps with stable, efficient performance even under severe operating conditions.

Specifications

Model		Delivery (ℓ/min (gpm) at No-Load)		Pressure Adjust Range kgf/cm² (psi)	Drive Speed (rpm)		Max. Setting Pressure kgf/cm² (psi)	Weight kgf (ℓbs)
Foot Mounting	Flange Mounting	1800rpm	1500rpm		Minimum	Maximum		
VDS-OA-1A1-E11	VDS-OB-1A1-E11	15 (4.0)	12.5 (3.3)	10 ~ 20 (143 ~ 286)	800	1800	20 (286)	A-type 6.5 (14.3)
VDS-OA-1A2-E11	VDS-OB-1A2-E11			15 ~ 35 (214 ~ 500)			35 (500)	
VDS-OA-1A3-E11	VDS-OB-1A3-E11			30 ~ 70 (429~1000)			70 (1000)	B-type 4.5 (9.9)

• Notes

1. The rotation of these pumps is clockwise as viewed from the shaft side.
2. Connect the drain piping directly to the oil tank at a point below the level of the oil inside.
3. Maintain the suction pressure within -0.3kgf/cm² (-4.3psi) at the suction port.
4. The pressure will be increased when the pressure adjusting screw is turned clockwise and will be reduced when the adjusting screw is turned counterclockwise.
5. The flow will be reduced when the flow adjusting screw is turned clockwise and will be increased when the adjusting screw is turned counterclockwise.
6. For proper alignment between the drive motor shaft and the pump shaft, the eccentricity between the drive shaft and pump shaft must be kept within 0.05mm (0.002in) and the eccentric angle error between them must be kept within 1°.
7. Viscosity grade ISO VG32 or equivalent hydraulic oil having a viscosity index of 90 or more is recommended.
8. The hydraulic oil temperature range is 15~60°C.
9. When the pump is to be operated for the first time, place the pump delivery side in No-load condition and repeat starting and stopping of the motor a number of times to extract the air from inside of the pump piping.

Model Code

VDS-0※-1A※-E11

- Design code
- Pressure Adjusting Range
  - 1: 10~20kgf/cm² (143 ~ 286 psi)
  - 2: 15~35kgf/cm² (214 ~ 500 psi)
  - 3: 30~70kgf/cm² (429 ~ 1000 psi)
- Volume Characteristics A: Constant delivery volume type
- Ring Size 1: 15ℓ/min (4.0gpm) (1800 rpm, No-Load)
- Mounting A: Foot mounting
  - B: Flange mounting
- Pump Size: O-type
- VDS Series Small Variable Volume Vane Pump

Hydraulic Symbol

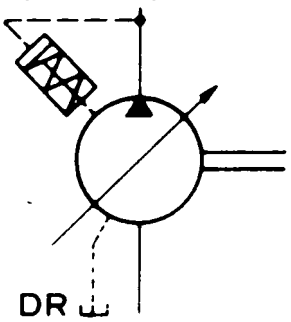

VDS Series

INSTALLATION DIMENSIONS mm (inch)

VDS-0-1A※-E11 (Foot Mounting Type)

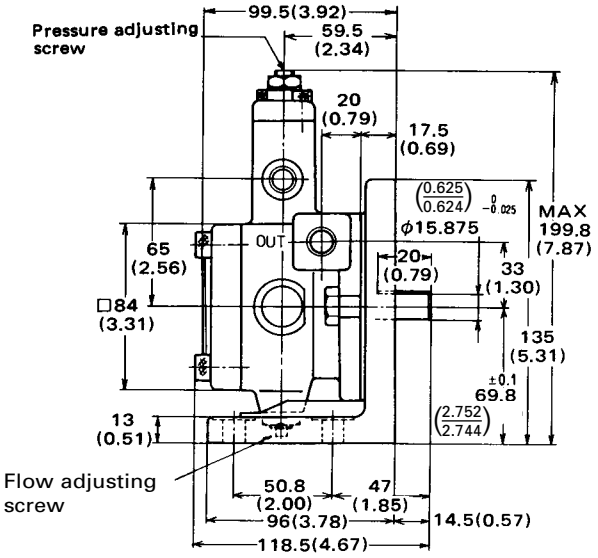

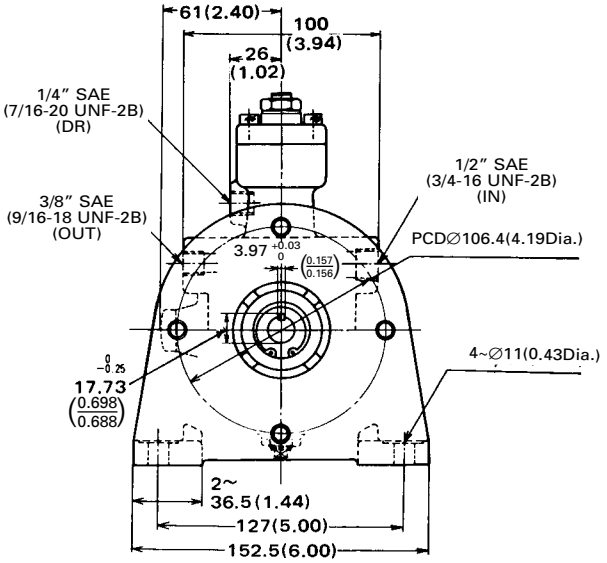

(Note) Foot mounting kit type: IHM-2-10

VDS-0-1A※-E11 (Flange Mounting Type)

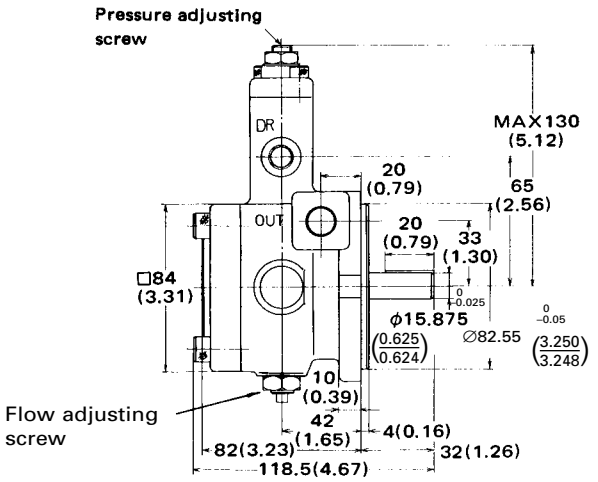

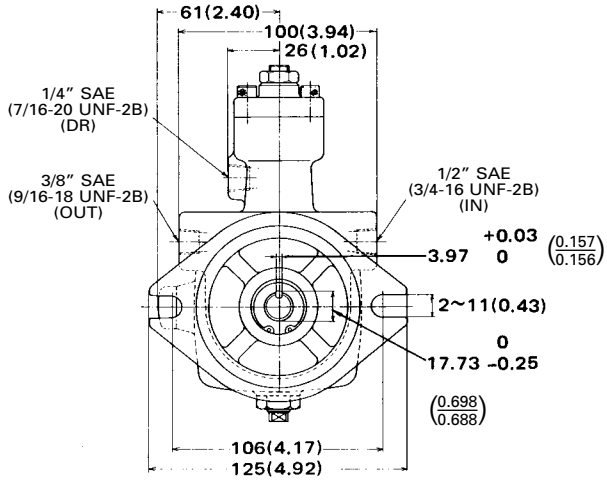

Adjustable displacement range

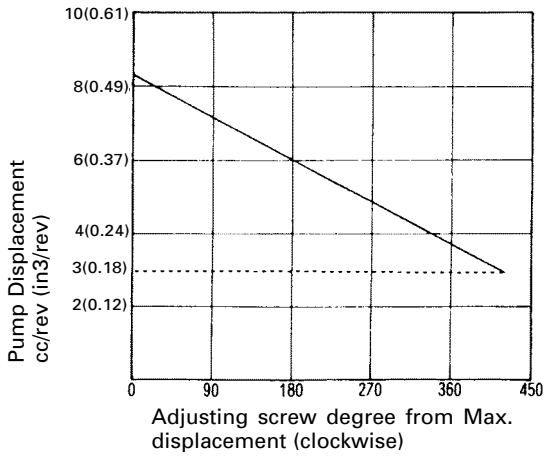

Performance Curves at 32cSt of oil viscocity

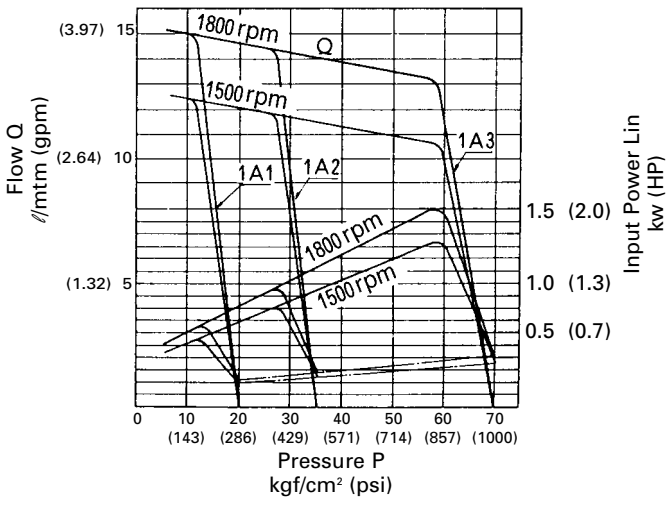

VDS Series

SMALL VARIABLE VOLUME VANE PUMP

Power loss curves at Full-cut off

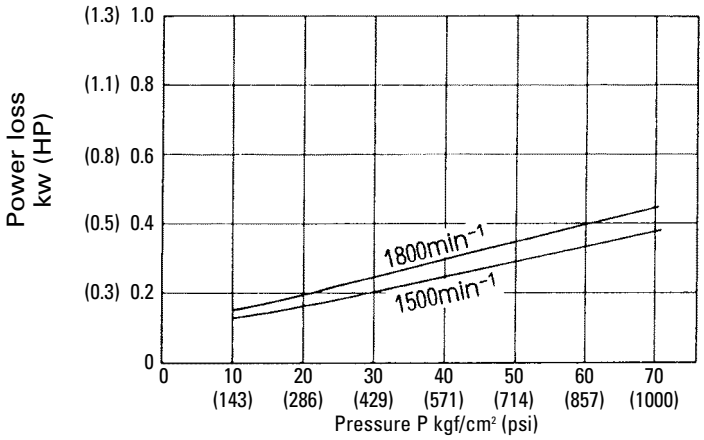

Noise level

measured at 1m behind pump

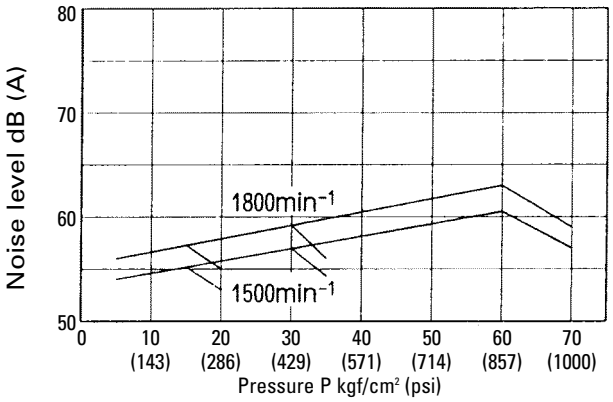

Cross Section Drawing

VDS-0B-1A※-E11

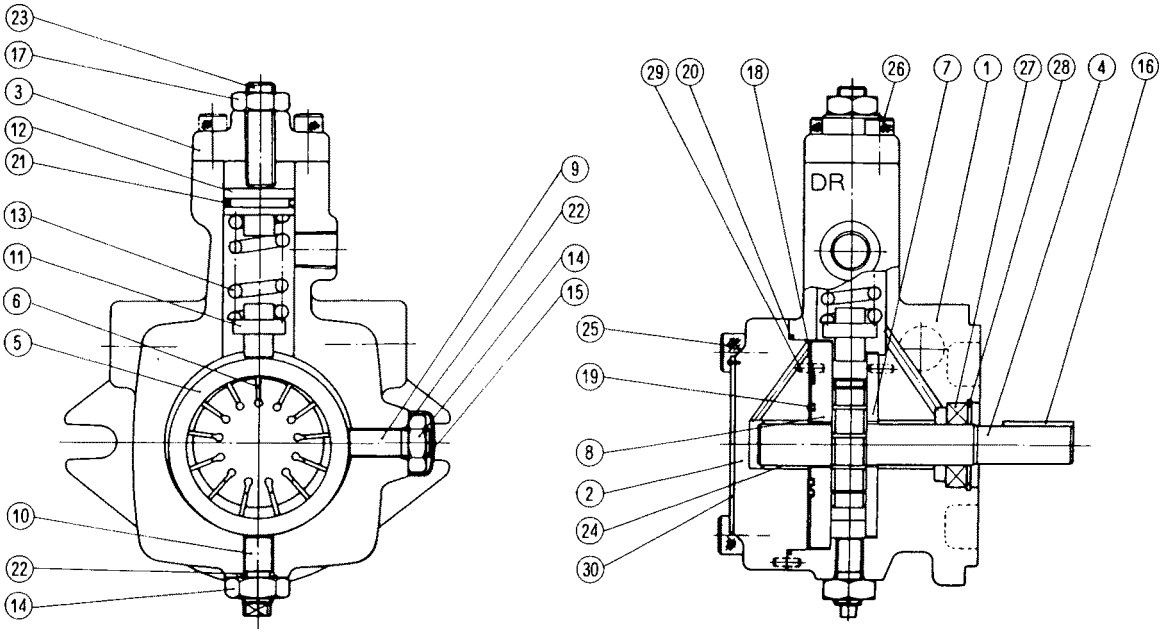

List of Seals

No.	Name of part	Number of Part	Qty.
18	O ring	ROA-032	1
19	O ring	ROA-023	1
20	O ring	S71 (NOK)	1
21	O ring	RO-P20	1
22	O ring	RO-PIO	2
27	Oil seal	TC-17358	1

Seal kit = VBAS-200B00

No.	Name of part	No.	Name of part
1	Body	16	Key
2	Cover (A)	17	Nut
3	Cover (B)	18	O ring
4	Shaft	19	O ring
5	Cam ring	20	O ring
6	Vane	21	O ring
7	Plate (S)	22	O ring
8	Plate (H)	23	Screw
9	Screw (A)	24	Bearing
10	Screw (B)	25	Screw
11	Piston	26	Screw
12	Holder	27	Oil seal
13	Spring	28	Snap ring
14	Nut	29	Pin
15	Cap	30	Name plate

VDS Series
Small Variable Volume Vane Pump

0.5in³/rev
4.0gpm
1000psi

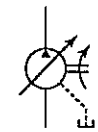

Features

①High efficiency operation with minimal power loss

All the performance of the original new VDR series mechanisms combines with precision machining for a pump that minimizes power loss, especially at full cut-off.

②Quiet operation

Journal bearings with a proven record on IP pumps plus new suction and discharge port configurations reduce operating noise and deliver quiet operation with minimal vibration, even in the high-pressure range.

③Compact and simple design, easy operation

Compact and quiet, VDS Series variable vane pumps are economical and easy to handle. A simple design allows use in a wide range of hydraulic systems.

④Precise characteristics, prompt response

Prompt response at both ON-OFF and OFF-ON ensures instantaneous, stable, high-precision operation.

⑤Solidly built for high efficiency and long life

VDS Series pumps are built to last, with a design that incorporates years of NACHI experience and know-how. Specially selected materials and skilled workmanship provide outstanding durability along with stable, high-efficiency operation.

Specifications

Model		Delivery (ℓ/min (gpm) at No-Load)		Pressure Adjust Range kgf/cm² (psi)	Drive Speed (rpm)		Max. Setting Pressure kgf/cm² (psi)	Weight kgf (ℓbs)
Foot Mounting	Flange Mounting	1800rpm	1500rpm		Minimum	Maximum		
VDS-0A-1A1-E11	VDS-0B-1A1-E11	15 (4.0)	12.5 (3.3)	10 – 20 (143 – 286)	800	1800	20 (286)	A-type 6.5 (14.3)
VDS-0A-1A2-E11	VDS-0B-1A2-E11			15 – 35 (214 – 500)			35 (500)	B-type 4.5 (9.9)
VDS-0A-1A3-E11	VDS-0B-1A3-E11			30 – 70 (429 – 1000)			70 (1000)	

• Handling

1 The direction of rotation for this pump is clockwise (rightward) when viewed from the shaft side.

2 Drain piping must be direct piping up to a point that is below the tank fluid level, and back pressure due to pipe resistance should not exceed 0.03MPa.

3 When adjusting pressure, pressure is increased by clockwise (rightward) rotation of the adjusting screw and decreased by counterclockwise (leftward) rotation.

4 When adjusting the flow rate, the flow rate is decreased by clockwise (rightward) rotation of the adjusting screw and increased by counterclockwise (leftward) rotation. The graph on the right provides general guidelines for the relationship between the rotation angle of the flow rate adjusting screw and the no-load discharge rate.

5 Factory Default P-Q Settings (Standard Model)

- Flow Rate Setting = Maximum flow rate for model as indicated in the catalog
- Pressure Setting = Pressure shown in table below

Factory Default Pressure Settings MPa{psi}
1 : 2.0 {286}
2 : 3.5 {500}
3 : 7.0 {1000}

However: $Q = q \times n \times 10^{-3}$

Q : No-load Discharge Rate (ℓ/min)
q : Capacity (cm³/rev)
N : Revolution Speed min⁻¹

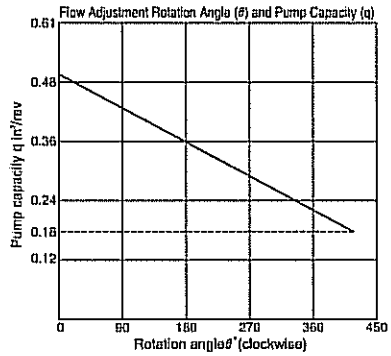

The values indicated above are at maximum pump discharge volume with the flow volume adjusting screw at the 0° position.
The broken line shows the flow volume adjustment range lower limit value.

6 Thrust Screw
The thrust screw is precision adjusted at the factory during assembly. Never touch the thrust screw.
See callout 9 in the cross-section diagram on page V-4.

7 Initial Operation
Before operating the pump for the first time, put the pump discharge side into the no-load state and then repeatedly start and stop the motor to bleed all air from inside the pump and the suction piping. After confirming that the pump is discharging oil, continue the no-load operation for at least 10 minutes to discharge all the air from the circuit.

8 For the hydraulic operating fluid, use an R&O type and wear-resistant type of ISO VG32 to 68 or equivalent (viscosity index of at least 90). Use hydraulic operating fluid that provides kinematic viscosity during operation in the range of 20 to 150mm²/s.

9 The operating temperature range is 15 to 60°C. When the oil temperature at startup is 15°C or less, perform a warm-up operation at low pressure until the oil temperature reaches 15°C. Use the pump in an area where the temperature is within the range of 0 to 60°C.

(Continued on following page)

10 Suction pressure is -0.03 to +0.03MPa (-4.3 to +4.3psi), and the suction port flow rate should to be no greater than 2m/sec.

11 Avoid pulley, gear, and other drive systems that impart a radial or thrust load on the end of the pump shaft.
Mount the pump so its pump shaft is oriented horizontally.

12 Provide a suction strainer with a filtering grade of about 100 μm (150 mesh). For the return line to the tank, use a 25 μm line filter.

13 Manage hydraulic operating fluid so contamination is maintained at class NAS10 or lower. Take care to avoid contamination with water or other foreign matter, and watch for discoloration. Whitish fluid indicates that air has contaminated the fluid, and brownish fluid indicates the fluid is dirty.

14 Contact your agent about using water- and glycol-based hydraulic operating fluids.

15 At startup, repeat the inching operation (start-stop) to bleed air from the pump and pipes.

16 Equip an air bleed valve in circuits where it is difficult to bleed air before startup.

17 To ensure proper lubrication of the pump's rubbing surfaces, supply oil to the interior of the pump before starting operation.

18 When centering the pump shaft, eccentricity with the motor shaft should be no greater than 0.05mm.
The angle error should be no greater than 1°.

Understanding Model Numbers

VDS − O ＊−1 A ＊−E11

- Design number
- Pressure adjustment range
  1: 1 to 2MPa {146 to 292psi} 2: 1.5 to 3.5MPa {218 to 500psi}
  3: 3 to 7MPa {437 to 1000psi}
- Flow rate characteristics A: Constant discharge rate type
- Ring size 1: 4.0gpm (1800 min^{-1}no load)
- Mounting method
  A: Foot type mounting B: Flange type mounting
- Pump size: 0
- Pump Type: VDS Series Compact Variable Vane Pump

Installation Dimension Drawings

VDS-0A-1A-＊-E11

Foot Mounting Type mm (inch)

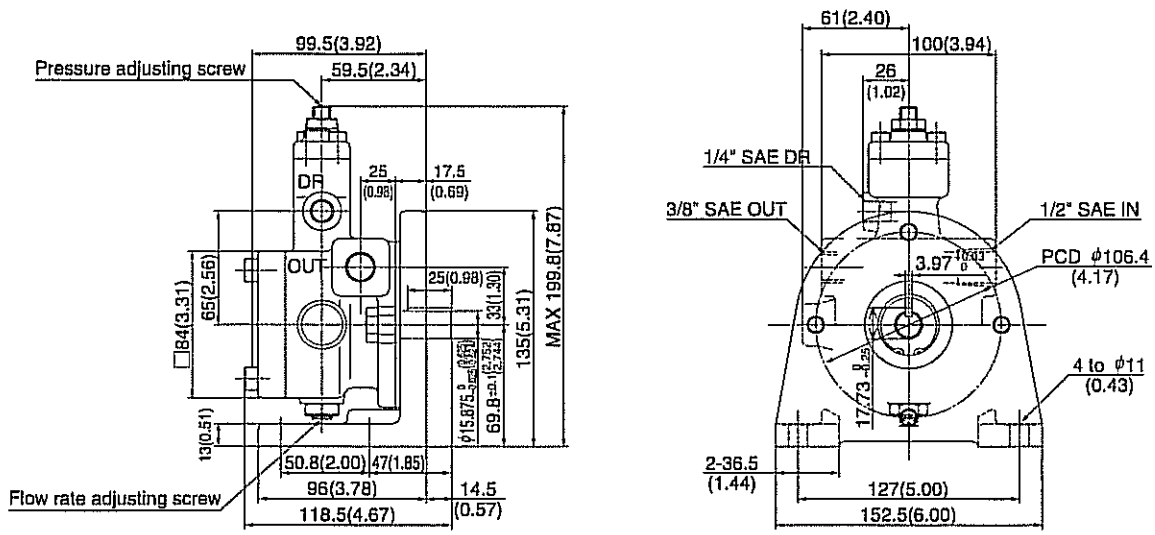

Note) Foot Mounting Kit: HM-2-10

VDS-0B-1A-*-E11

Flange Mounting

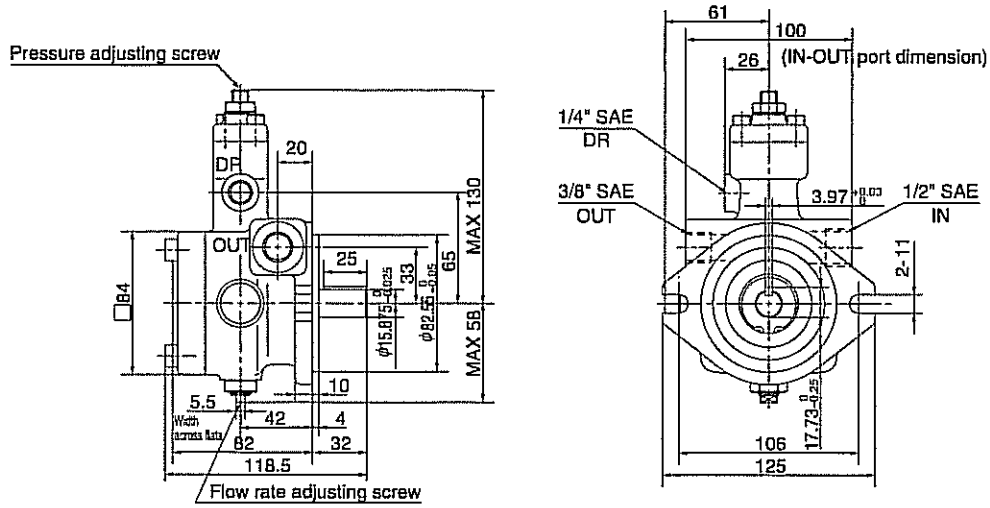

Performance Curves

Typical characteristics at hydraulic operating fluid kinematic viscosity of 32 mm²/s

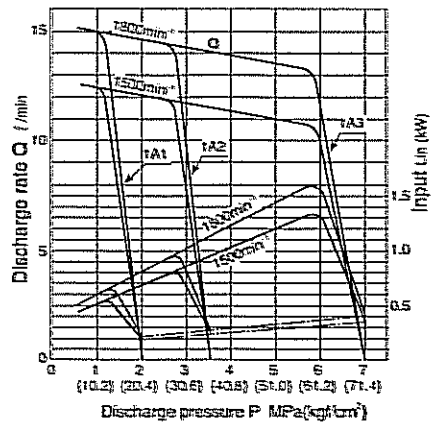

Power Loss Curve — At Full Cutoff

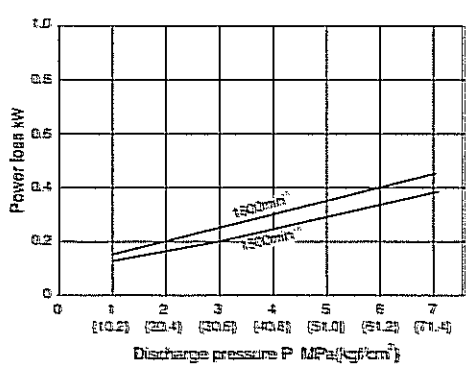

Noise Characteristics

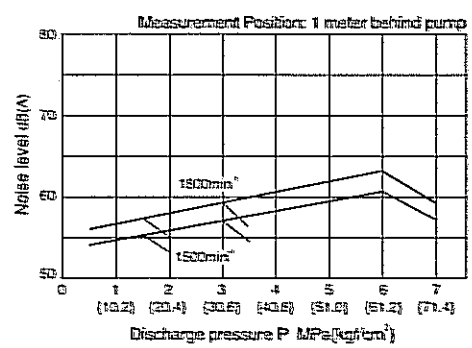

Cross-sectional Drawing

VDS-0B-1A"-E11

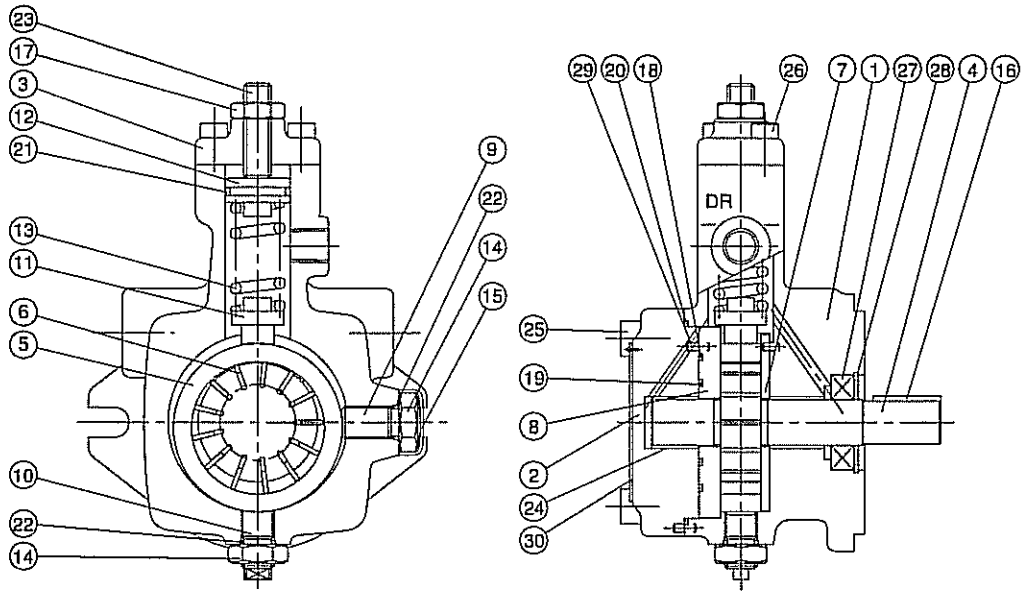

List of Sealing Parts

Seal Kit: VBAS-200B00

Applicable Pump Model: VDS-0A/B-1A"-E11

Part No.	Part Name	Part Number	Q'ty
18	O-ring	AS568-032	1
19	O-ring	AS568-023	1
20	O-ring	S71 (NOK)	1
21	O-ring	1A-P20	1
22	O-ring	1A-P10	2
27	Oil seal	TCN-17358	1

Note)
1.Oil seals are manufactured by Nippon Oil Seal Industry Co. Ltd. (NOK).
2.O-ring 1A/B-** refers to JIS B2401-1A.

Part No.	Part Name	Part No.	Part Name
1	Body	16	Key
2	Cover (A)	17	Nut
3	Cover (B)	18	O-ring
4	Shaft	19	O-ring
5	Cam ring	20	O-ring
6	Vane	21	O-ring
7	Plate (S)	22	O-ring
8	Plate (H)	23	Screw
9	Thrust screw	24	Bearing
10	Screw	25	Screw
11	Piston	26	Screw
12	Holder	27	Oil seal
13	Spring	28	Snap ring
14	Nut	29	Pin
15	Cap	30	Nameplate

BALDOR
A MEMBER OF THE ABB GROUP

BALDOR • RELIANCE

Product Information Packet

VWDM3554

1.5HP,1755RPM,3PH,60HZ,56C,3526M,TENV,F1

Copyright © All product information within this document is subject to Baldor Electric Company copyright © protection, unless otherwise noted.

Part Detail							
Revision:	E	Status:	PRD/A	Change #:		Proprietary:	No
Type:	AC	Prod. Type:	3526M	Elec. Spec:	35WGP689	CD Diagram:	
Enclosure:	TENV	Mfg Plant:		Mech. Spec:	35S603	Layout:	
Frame:	56C	Mounting:	F1	Poles:	04	Created Date:	02-18-2008
Base:	N	Rotation:	R	Insulation:	F	Eff. Date:	03-11-2011
Leads:	9#18	Literature:		Elec. Diagram:		Replaced By:	

Nameplate NP1496L								
CAT.NO.	VWDM3554							
SPEC.	35S603P689							
HP	1.5							
VOLTS	208-230/460							
AMP	4.9-4.5/2.25							
RPM	1755							
FRAME	56C	HZ	60	PH	3			
SER.F.	1.15	CODE	M	DES	B	CLASS	F	
NEMA-NOM-EFF	85.5	PF	72					
RATING	40C AMB-CONT							
CC		USABLE AT 208V						
DE	6205	ODE	6203					
ENCL	TENV	SN						

Parts List

Part Number	Description	Quantity
SA168807	SA 35S603P689	1.000 EA
RA157100	RA 35S603P689	1.000 EA
NS2512A01	INSULATOR, CONDUIT BOX X	1.000 EA
35CB3008A01W	35 CB .50 NPT @ 6, MACH WHITE EPOXY	1.000 EA
35GS1039	05 MOLDED GASKET W/LIP, 1.12 LEAD HOLE,	1.000 EA
51XB1016A07	10-16 X 7/16 HXWSSLD SERTYB	2.000 EA
11XW1032G06	10-32 X .38, TAPTITE II, HEX WSHR SLTD U	1.000 EA
35EP3100M71MW	SPL FR ENDPLATE -TENV- SP.#9 (WHITE EPOX	1.000 EA
HW4032A01	BLUE DRAIN PLUG FOR WASH DOWN MOTORS	3.000 EA
HW5100A03SP	WAVY WASHER (W1543-017)	1.000 EA
HW4032A01	BLUE DRAIN PLUG FOR WASH DOWN MOTORS	3.000 EA
HW4600B49SP	SEAL 0.938 X 1.624 X 0.250 SINGLE LIP DB	1.000 EA
12XN1032S20	10-32 X 1-1/4 HEX M.S. , STAINLESS STEEL	2.000 EA
35CB4522	35 LIPPED CB LID AUTOPHORETIC	1.000 EA
35GS1030A02	35 GS FOR CB LID - WHITE NEOPRENE	1.000 EA
59XW0832S07	TAPTITE II,HEX WSHR UNSLTD SER,410 S.S.,	4.000 EA
HW4600B32SP	V-RING SLINGER 1.000 X 1.540 X 0.240	1.000 EA
HW2502D13	SS KEY, 3/16 SQ X 1.375	1.000 EA
HA7000A04	KEY RETAINER 0.625 DIA SHAFTS	1.000 EA
MJ5001A01	46-665 RED SEALER	0.001 QT
LB1164	LABEL,WARNING AND DRAIN	1.000 EA
85XU0407S04	4X1/4 U DRIVE PIN STAINLESS	2.000 EA
MJ1000A75	GREASE, POLYREX EM EXXON	0.050 LB
35EP3300A48MW	SPL FACE MTD EP - 205 BRG - W/SEAL FOR W	1.000 EA

Parts List (continued)

Part Number	Description	Quantity
MG1025Z20	ACTIVATOR WILKOFAST 060.32	0.010 GA
MG1025W11	PAINT- 781-101 WILKOFAST WHITE EPOXY	0.017 GA
HA3100S07	THRUBOLT 10-32 X 8.375 SS	4.000 EA
LB1125C01	STD (STOCK) CARTON LABEL BALDOR WITH FLA	1.000 EA
LC0005	CONN.DIA.,TY M,9-LD,DUAL VOLT,REVERSING	1.000 EA
NP1496L	WD, SS, UL CSA CC, W/O THERMAL, LASER	1.000 EA
35PA1066	PACKING GROUP COMBINED PRINT	1.000 EA
PK3082	STYROFOAM CRADLE	1.000 EA

Performance Data at 460V, 60Hz, 1.5HP (Typical performance - Not guaranteed values)							
General Characteristics							
Full Load Torque:	4.41 LB-FT			Start Configuration:		DOL	
No-Load Current:	1.45 Amps			Break-Down Torque:		20.3 LB-FT	
Line-line Res. @ 25°C.:	9.05 Ohms A Ph / 0.0 Ohms B Ph			Pull-Up Torque:		10.7 LB-FT	
Temp. Rise @ Rated Load:	82 C			Locked-Rotor Torque:		14.8 LB-FT	
Temp. Rise @ S.F. Load:	96 C			Starting Current:		19.7 Amps	
Load Characteristics							
% of Rated Load	25	50	75	100	125	150	S.F.
Power Factor:	31.0	50.0	63.0	72.0	78.0	81.0	76.0
Efficiency:	71.6	81.6	84.7	85.5	85.2	84.2	85.3
Speed:	1791.0	1781.0	1770.0	1759.0	1747.0	1732.0	1752.0
Line Amperes:	1.51	1.68	1.93	2.24	2.61	3.04	2.46

Performance Graph at 460V, 60Hz, 1.5HP Typical performance - Not guaranteed values

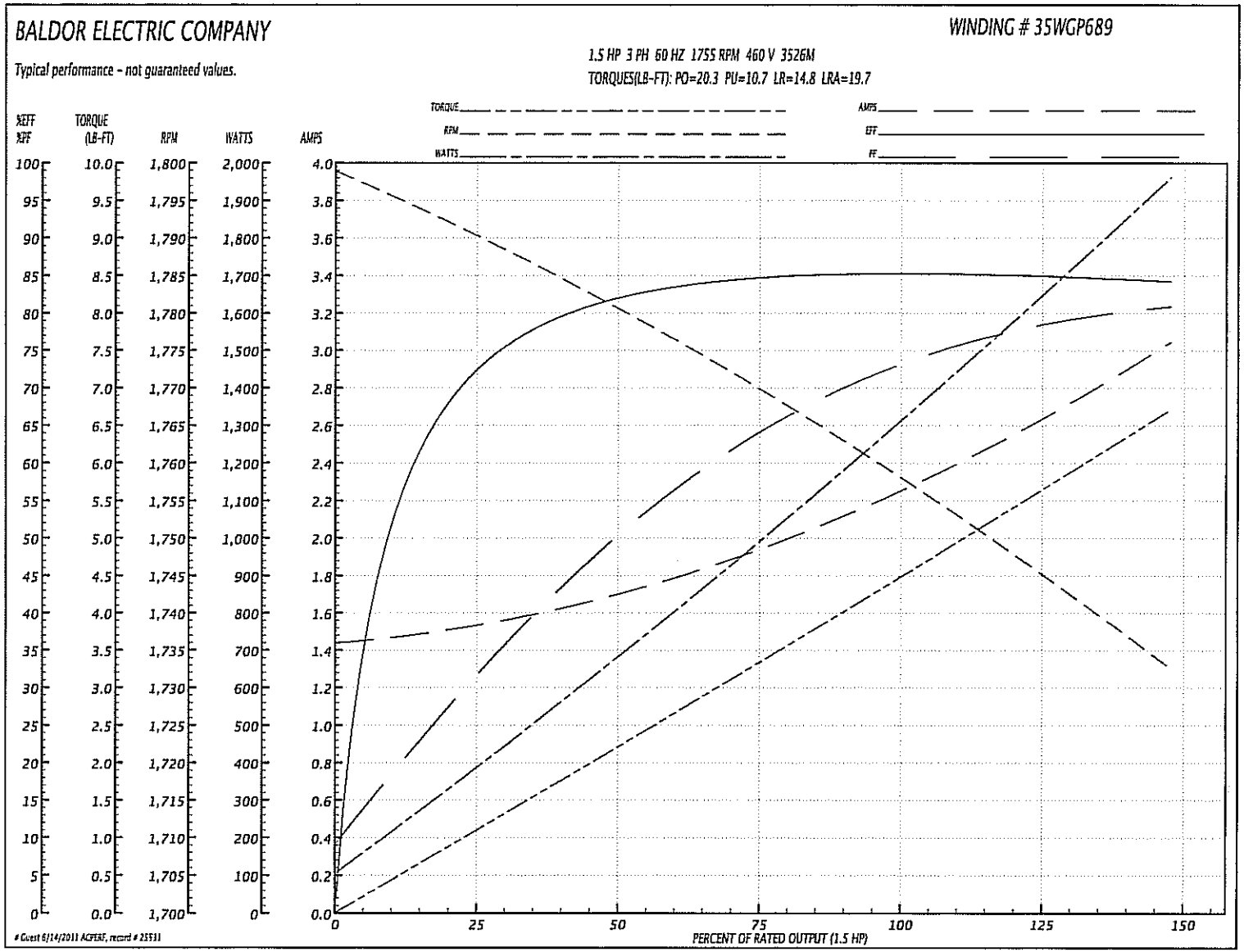

35LYS603

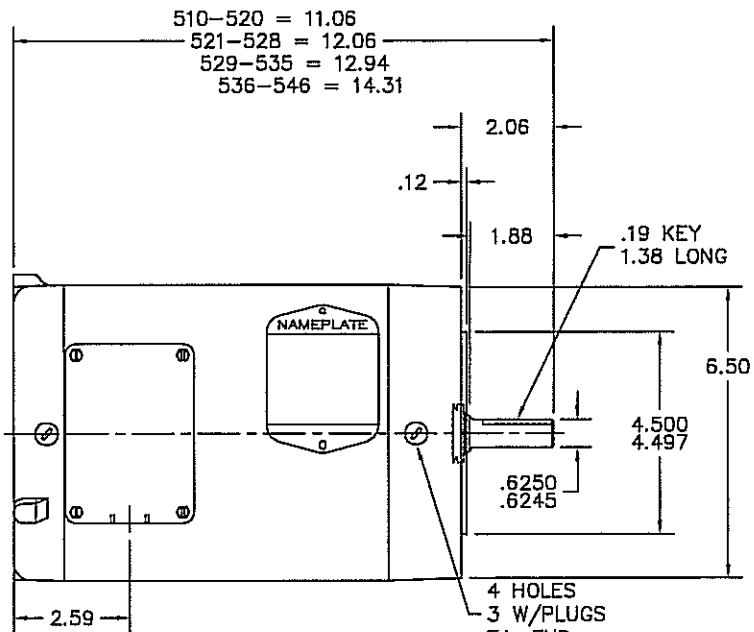

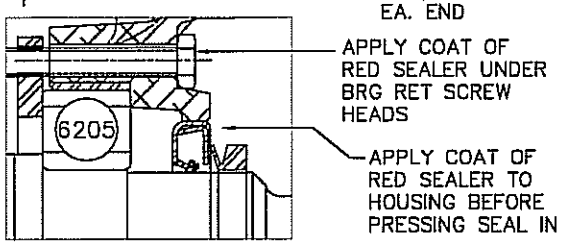

PULLEY END DETAIL

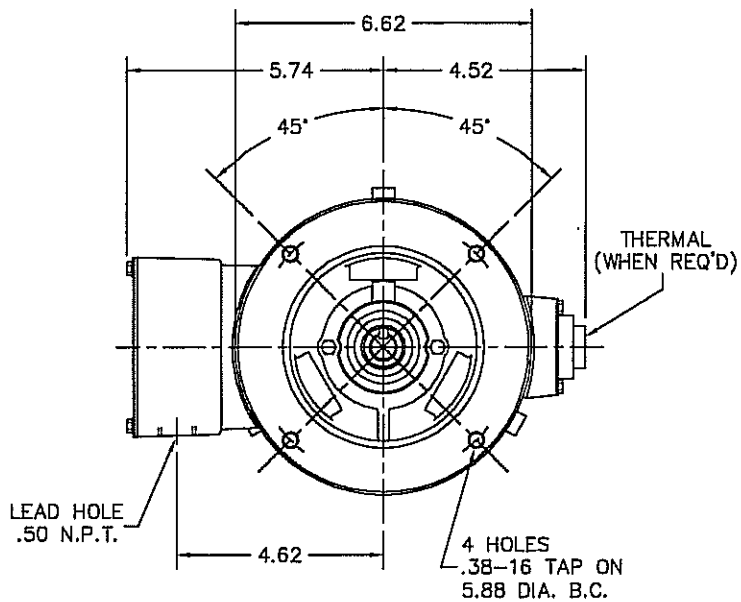

CUSTOMER IS RESPONSIBLE FOR DETERMINING THAT BALDOR'S PRODUCT WILL PERFORM SUITABLY IN THE INTENDED APPLICATION.

REV. DESC: CHG'D FORSHEDA SLINGER FROM HW4600B46 TO HW4600B32			BALDOR • DODGE • RELIANCE
REV. LTR: D	VERSION: 04	TDR: 000000537996	
FILE: \AAA\00092\985		REVISED: 08:44:01 04/27/2010	STD VERT 56C TENV 35M WD (S/P #9)
MTL: –		BY: ENROSPO	SH 1 of 1

35LYS603

CD0005

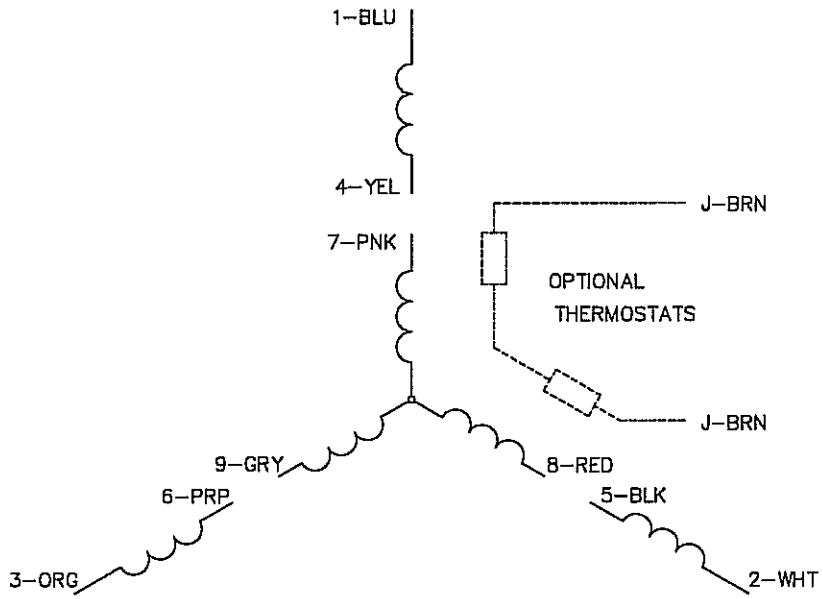

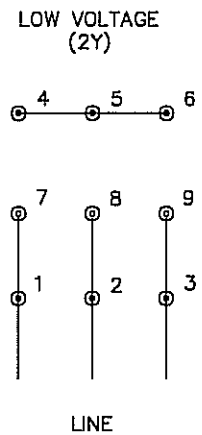

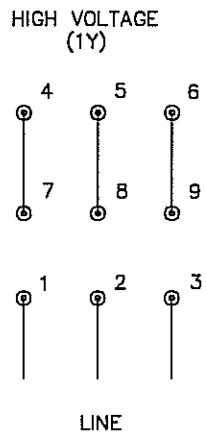

NOTES:

1. INTERCHANGE ANY TWO LINE LEADS TO REVERSE ROTATION.
2. OPTIONAL THERMOSTATS ARE PROVIDED WHEN SPECIFIED.
3. ACTUAL NUMBER OF INTERNAL PARALLEL CIRCUITS MAY BE A MULTIPLE OF THOSE SHOWN ABOVE.
4. LEAD COLORS ARE OPTIONAL. LEADS MUST ALWAYS BE NUMBERED AS SHOWN.

CD0005

REV. DESC: REVISE TO SHOW OPTIONAL COLORS			
REV. LTR: E	BY: JLP	REVISED: 01/19/99 10:15	TDR: 0171435
CD0005		FILE: AAA00005140	MDL: –
		MTL: –	

BALDOR ELECTRIC Co.

3PH, DV, 9 LEADS

SERIES 'TA' (NFPA) CYLINDER

Floating Rod Bushing

SELF ALIGNMENT FEATURE

Rod Bushing is designed to float .002", improving bearing surface alignment.

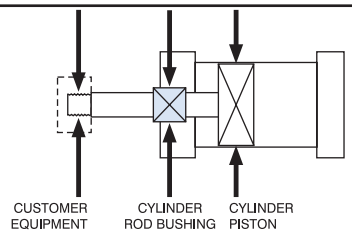

- ***Reduces cylinder drag and erractic operation***
- ***Reduces cylinder wear***
- ***Provides a minimum of 25% longer life than "fixed" Rod Bushing designs***

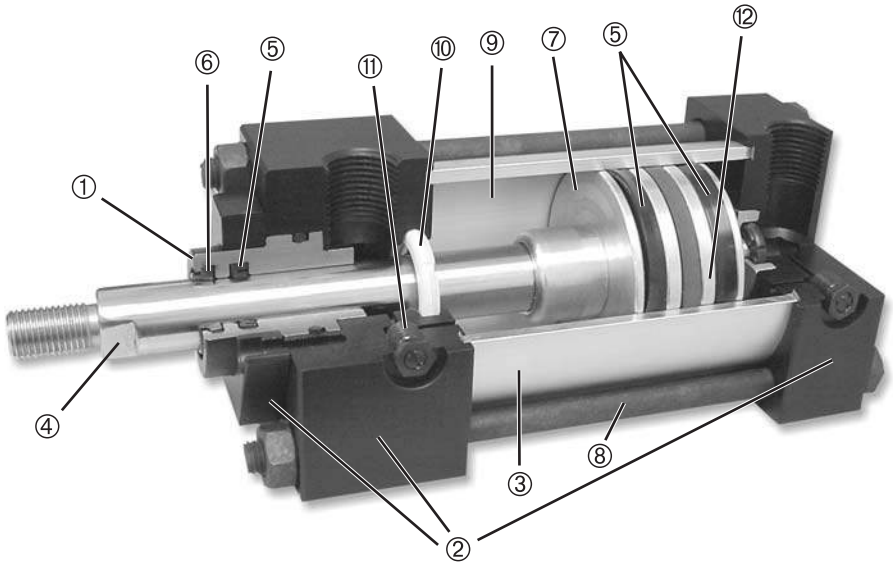

HEAVY-DUTY DESIGN FOR RELIABLE, CONSISTENT OPERATION

① ***FLOATING ROD BUSHING*** – Precision machined from 150,000 PSI rated graphite filled cast iron and PTFE coated to reduce friction and extend cycle life. Bushing design "traps" lubrication in effective bearing area.

② ***HEAD, CAP & RETAINER*** – Precision machined from high strength 6061-T6 aluminum alloy. Black anodized for corrosion resistance.

③ ***CYLINDER TUBE*** – Precision machined from 6063-T6832 high tensile aluminum alloy and hard coat to 60 Rc for wear resistance and extended cycle life.

④ ***PISTON ROD*** – Precision machined from high yield, polished and hard chrome plated steel.

⑤ ***PISTON & ROD SEALS*** – Heavy lip design Carboxilated Nitrile construction. Seals are pressure activated and wear compensating for long life. (Self lubricating material).

⑥ ***ROD WIPER*** – Abrasion resistant urethane provides aggressive wiping action in all environments. External lip design prevents debris from entering cylinder.

⑦ ***PISTON*** – Precision machined from 6061-T651 alloy aluminum, provides an excellent bearing surface for extended cylinder life.

⑧ ***TIE RODS*** – Prestressed high carbon steel tie rod construction eliminates axial loading of cylinder tube and maintains compression on tube and end seals.

⑨ ***PERMANENT LUBRICATION*** – Permanently lubricated with Magna-Lube G PTFE based grease on all internal components. This is a non-migratory type high performance grease providing outstanding service life. No additional lubrication is required.

⑩ ***CUSHIONS*** – (Options H & C) Floating cushion seal designed for maximum cushion performance, quick return stroke break-away and extended life.

⑪ ***CUSHION ADJUSTMENT NEEDLE*** – Adjustable steel needle design has fine thread metering and is positively captured to prevent needle ejection during adjustment.

⑫ ***PISTON MAGNET*** – (Option MPR) for TRD magnetically operated reed and solid state switches (refer to pages 107-113).

OPERATING PRESSURE	250 PSI AIR (17 BAR)

OPERATING TEMPERATURE	Carboxilated Nitrile: -20°F to 200°F (-25°C to 90°C) Fluorocarbon: 0°F to 400°F (-20°C to 200°C)

Performance options:

- ***WB*** – PTFE piston wear band, recommended for pivot mounted, long strokes or cylinders that may see side loads.
- ***ST*** – Stop tubes are used to reduce rod bearing and piston stress (refer to page 89 for cylinder design guidance).
- ***MA*** – Micro-Adjust provides a precision adjustment on the cylinder extend stroke, providing quick and accurate cylinder positioning, reducing set-up time.
- ***SSA*** – Stainless Steel Piston Rod, Tie Rods, Nuts, and Fasteners provide corrosion resistance in outdoor applications and wet environments.
- ***LF*** – Low Friction seals reduce breakaway and running friction. Effective at all operating pressures.
- ***NR*** – Non-Rotating option incorporates (2) internal guide rods preventing rod rotation (NFPA dimensions).

HOW TO ORDER: SERIES 'TA' (STANDARD CYLINDER)

TA - MF1 ___ - 2.50 x 10 - HC - MPR

SERIES	
TA	250 PSI AIR

NFPA MOUNTS	
MF1	FRONT FLANGE (1.50"-6" Bore)
MF2	REAR FLANGE (1.50"-6" Bore)
ME3	FRONT MOUNTING HOLES (8"-12" Bore)
ME4	REAR MOUNTING HOLES (8"-12" Bore)
MP1	REAR PIVOT CLEVIS (1.50"-12" Bore)
MP2	REAR PIVOT CLEVIS (1.50"-6" Bore)
MP4	REAR PIVOT EYE (1.50"-6" Bore)
MS1	FRONT & REAR END ANGLE (1.50"-8" Bore)
MS2	SIDE LUG (1.50"-8" Bore)
MS4	BOTTOM TAPPED HOLES (1.50"-12" Bore)
MT1	FRONT TRUNNION (1.50"-8" Bore)
MT2	REAR TRUNNION (1.50"-8" Bore)
MT4	INTERMEDIATE TRUNNION (1.50"-8" Bore)
MXO	NO MOUNT (1.50"-12" Bore)
MX1	EXTENDED TIE RODS - HEAD & CAP (1.50"-12" Bore)
MX2	EXTENDED TIE RODS (CAP) (1.50"-12" Bore)
MX3	EXTENDED TIE RODS (HEAD) (1.50"-12" Bore)

BORE	
1.50	2
2.50	3.25
4	5
6	8
10	12

STROKE
0" to 120" Made to Order

STYLE
SINGLE ROD (LEAVE BLANK)
D = DOUBLE ROD END

CUSHIONS		
H	HEAD CUSHION POSITION 2 IS *STANDARD* *SPECIFY* FOR POSITIONS: 1, 3 & 4	
LH	**LONG** HEAD CUSHION POSITION 2 IS *STANDARD* *SPECIFY* FOR POSITIONS: 1, 3 & 4	
ELH	**EXTRA LONG** HEAD CUSHION POSITION 2 IS *STANDARD* *SPECIFY* FOR POSITIONS: 1, 3 & 4	X
C	CAP CUSHION POSITION 6 IS STANDARD SPECIFY FOR POSITIONS: 5, 7 & 8	
LC	**LONG** CAP CUSHION POSITION 6 IS STANDARD SPECIFY FOR POSITIONS: 5, 7 & 8	
ELC	**EXTRA LONG** CAP CUSHION POSITION 6 IS STANDARD SPECIFY FOR POSITIONS: 5, 7 & 8	X
FIXED CUSHIONS		
FCH	FIXED HEAD CUSHION (NON-ADJUSTABLE, NO ADJUSTMENT NEEDLE)	
FCC	FIXED CAP CUSHION (NON-ADJUSTABLE, NO ADJUSTMENT NEEDLE)	
FC	FIXED HEAD AND CAP CUSHION (NON-ADJUSTABLE, NO ADJUSTMENT NEEDLE)	

OPTIONS		
ADDS LENGTH TO CYLINDER - SEE "OPTION LENGTH ADDER" CHART BELOW.		
	A =	EXTENDED PISTON ROD THREAD (Example: A = 2")
	AS	ADJUSTABLE STROKE - RETRACT (SPECIFY LENGTH, Example: AS = 4")
	A / O	AIR / OIL PISTON
X	B	.25" URETHANE BUMPER BOTH ENDS
X	BC	.25" URETHANE BUMPER CAP ONLY
X	BH	.25" URETHANE BUMPER HEAD ONLY
	BP	BUMPER PISTON SEALS (1.50" - 8" Bore)
	BSP	BSP PORTS (SPECIFY SIZE, Example: BSP = .25")
	C =	EXTENDED PISTON ROD (Example: IF C = 0.50", THEN 1" ROD EXTENSION IS C = 1.50")
	EN	**ELECTROLESS NICKEL PLATED** *(Refer to page 84 for specifications)*
	KK2	LARGE MALE ROD THREAD
	KK3	FEMALE ROD THREAD
	KK3S	STUDDED PISTON ROD (KK3 with Stud, Loctite in place)
	KK4	FULL DIAMETER MALE ROD THREAD
	KK5	BLANK ROD END (NO THREADS, "A" = 0")
	LF	**LOW FRICTION SEALS** *(Refer to page 84 for specifications)*
	MA	MICRO-ADJUST (6" MAX. STROKE) *Available on Double Rod End Models*
	MAB	MICRO-ADJUST WITH SOUND DAMPENING BUMPER (6" MAX. STROKE)
	MPR	MAGNETIC PISTON FOR REED OR SOLID STATE SWITCHES - TRD MODELS: R10, R10P, RAC, RHT & MSS *(Refer to pages 107-113 for selection)*
	MS	METALLIC ROD SCRAPER (BRASS CONSTRUCTION)
	NR	**NON-ROTATING** *(Refer to page 86 for specifications)*
	OP	OPTIONAL PORT LOCATION (Example: Ports @ 3 & 7)
	OS	OVERSIZE ROD DIAMETER (SPECIFY SIZE, Example: OS = 1.38")
	SAE	SAE PORTS (SPECIFY SIZE, Example: SAE #10)
X	SE	SPRING EXTEND (1.50, 2, 2.50 bore)
X	SR	SPRING RETURN (1.50, 2, 2.50 bore)
	SSA	STAINLESS STEEL PISTON ROD, TIE RODS & NUTS, AND FASTENERS
	SSF	STAINLESS STEEL FASTENERS
	SSR	STAINLESS STEEL PISTON ROD
	SST	STAINLESS STEEL TIE RODS & NUTS
X	ST	STOP TUBE (SPECIFY STOP TUBE LENGTH AND EFFECTIVE STROKE) (Example: TA MS4 2 X 24" EFFECTIVE STROKE-ST=3)
	STEEL TUBE	STEEL CYLINDER TUBE, BLACK EPOXY PAINT FINISH
	TH	**400 PSI HYDRAULIC NON-SHOCK** *(Refer to page 90 for specifications)*
	VS	FLUOROCARBON SEALS
	WB	PISTON WEAR BAND
	XX	SPECIAL VARIATION (SPECIFY)

About our Part Number System

- Simple, easy to understand
- No excessive codes!
- Eliminates mistakes when ordering

Example: A 2.50" Bore by 10" Stroke NFPA cylinder, Front Flange Mount, Head & Cap Cushions, Magnetic Piston for Switches.

Part Number: TA-MF1-2.50 x 10-HC-MPR

STANDARD PORT AND CUSHION ADJUSTMENT POSITIONS

- Ports - Positions 1 and 5
- Cushion Adjustment - Positions 2 and 6
- Specify Non-Standard Positions When Ordering

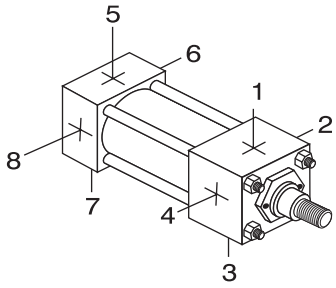

OPTION LENGTH ADDER
(ADD TO CATALOG BASIC OVERALL LENGTH DIMENSIONS)

BORE	OPTION							
	B	BC	BH	ELC	ELH	SE	SR	ST* (STOP TUBE) Example: ST=2
1.50	.50	.25	.25	1	1	Refer to page 88 for length adders and available bore sizes and strokes		2
2	.50	.25	.25	1	1			2
2.50	.50	.25	.25	1	1			2
3.25	.50	.25	.25	1.25	1.25			2
4	.50	.25	.25	1.25	1.25			2
5	.50	.25	.25	1.25	1.25			2
6	.50	.25	.25	1.50	1.50			2
8	.50	.25	.25	1.50	1.50			2
10	.50	.25	.25	2	2			2
12	.50	.25	.25	2	2			2

***Note:** The desired Stop Tube length adds directly to the overall cylinder length.

NFPA MOUNTS

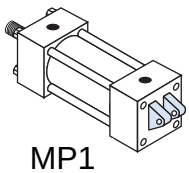
MP1

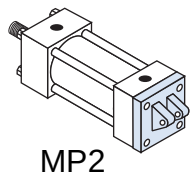
MP2

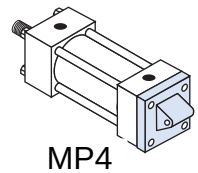
MP4

1.7 M HYDRAULIC CYLINDER LIST		
LOCATION	**(QTY) PART NUMBER**	**DESCRIPTION**
THICKENER		
TENSION	**(2) TRDCYL3.25X4**	**TA-MP1-3.25X4-C=1.125-KK4-OP=1AND5-SSA-TH**
STEERING	**(1) TRDCYL2.5X2**	**TA-MP4-2.5X2-C=1.75-KK4-OP=1AND5-OS=1-SSA-TH**
PLOW GRID	**(2) TRDCYL2X12**	**TA-MP1-2X12-C=2.25-KK4-OP=1AND5-OS=1-SSA-TH**
PRESS		
TENSION	**(4) TRDCYL3.25X12**	**TA-MP1-3.25X12-C=1.375-KK4-OP=1AND5-SSA-TH**
STEERING	**(2) TRDCYL2.5X2**	**TA-MP4-2.5X2-C=1.75-KK4-OP=1AND5-OS=1-SSA-TH**
DOCTOR BLADE	**(2) TRDCYL1.5X3**	**TA-MP4-1.5X3-C=0.75-KK2-OP=1AND5-SSA-TH**

SERIES 'TA' DIMENSIONS: BASIC CYLINDER (NO MOUNT)

About Rod End Styles

Style 1 Male Rod End is STANDARD

Other NFPA Styles can be specified (See Chart).

Need a rod end not listed?
NO PROBLEM! Each Piston Rod is made to order and does not delay shipment. Coarse (UNC) threads, Metric threads or just plain rod ends are common. Thread lengths are also made to order (Specify: "A"=Length).

NEED SOMETHING NOT LISTED?
Just send us a sketch.
In most cases, quotes are turned around in one day!

PISTON ROD END STYLES

STYLE 1 & 2 — KK1 & KK2

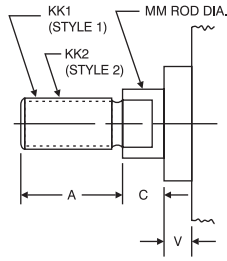

STYLE 3 — KK3

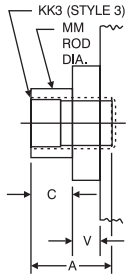

STYLE 4 — KK4

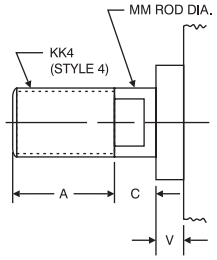

STYLE 5 — KK5

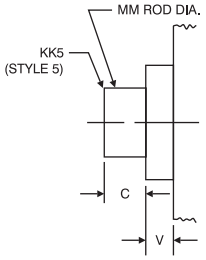

BORE	MM ROD DIAMETER	STANDARD Style 1 - Male KK1	A	OPTIONAL Style 2 - Male KK2	A	Style 3 - Female KK3	A	Style 4 - Male KK4	A	Style 5 - Blank KK5	C	V
1.50, 2, 2.50	.63 Standard	.44-20	.75	.50-20	.75	.44-20	.75	.63-18	.75	No Threads	.38	.25
	1 Oversize	.75-16	1.13	.88-14	1.13	.75-16	1.13	1-14	1.13	No Threads	.50	.50
3.25, 4, 5	1 Standard	.75-16	1.13	.88-14	1.13	.75-16	1.13	1-14	1.13	No Threads	.50	.25
	1.38 Oversize	1-14	1.63	1.25-12	1.63	1-14	1.63	1.38-12	1.63	No Threads	.63	.38
6 & 8	1.38 Standard	1-14	1.63	1.25-12	1.63	1-14	1.63	1.38-12	1.63	No Threads	.63	.38
	1.75 Oversize	1.25-12	2	1.50-12	2	1.25-12	2	1.75-12	2	No Threads	.75	.50
10	1.75 Standard	1.25-12	2	1.50-12	2	1.25-12	2	1.75-12	2	No Threads	.75	.50
	2 Oversize	1.50-12	2.25	1.75-12	2.25	1.50-12	2.25	2-12	2.25	No Threads	.88	.38
12	2 Standard	1.50-12	2.25	1.75-12	2.25	1.50-12	2.25	2-12	2.25	No Threads	.88	.38
	2.50 Oversize	1.88-12	3	2.25-12	3	1.88-12	3	2.50-12	3	No Threads	1	.50

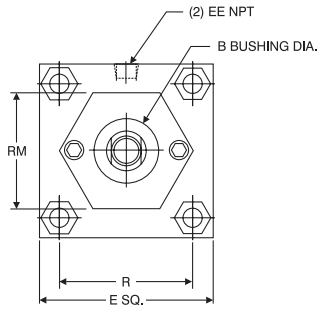

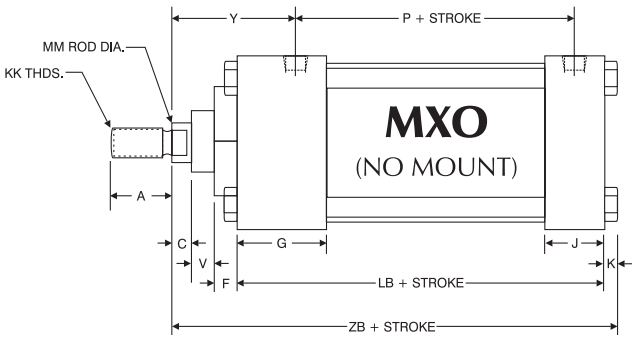

BASIC DIMENSIONS 'MXO' STANDARD & OVERSIZE RODS																			
BORE	ROD DIAMETER	A	B	C	E	EE	F	G	J	K	KK	LB	MM	P	R	RM	V	Y	ZB
1.50	.63 Standard	.75	1.13	.38	2	.38	.38	1.50	1	.25	.44-20	3.63	.63	2.38	1.43	2 SQ.	.25	1.88	4.88
	1 Oversize	1.13	1.50	.50							.75-16		1				.50	2.25	5.25
2	.63 Standard	.75	1.13	.38	2.50	.38	.38	1.50	1	.31	.44-20	3.63	.63	2.38	1.84	1.75 HEX	.25	1.88	4.94
	1 Oversize	1.13	1.50	.50							.75-16		1			2.50 SQ.	.50	2.25	5.31
2.50	.63 Standard	.75	1.13	.38	3	.38	.38	1.50	1	.31	.44-20	3.75	.63	2.50	2.19	1.75 HEX	.25	1.88	5.06
	1 Oversize	1.13	1.50	.50							.75-16		1			3 SQ.	.50	2.25	5.44
3.25	1 Standard	1.13	1.50	.50	3.75	.50	.63	1.75	1.25	.38	.75-16	4.25	1	2.75	2.76	2.75 DIA.	.25	2.38	6
	1.38 Oversize	1.63	2	.63							1-14		1.38			3.75 SQ.	.38	2.63	6.25
4	1 Standard	1.13	1.50	.50	4.50	.50	.63	1.75	1.25	.38	.75-16	4.25	1	2.75	3.32	2.75 DIA.	.25	2.38	6
	1.38 Oversize	1.63	2	.63							1-14		1.38			3.50 DIA.	.38	2.63	6.25
5	1 Standard	1.13	1.50	.50	5.50	.50	.63	1.75	1.25	.44	.75-16	4.50	1	3	4.10	2.75 DIA.	.25	2.38	6.31
	1.38 Oversize	1.63	2	.63							1-14		1.38			3.50 DIA.	.38	2.63	6.56
6	1.38 Standard	1.63	2	.63	6.50	.75	.63	2	1.50	.44	1-14	5	1.38	3.25	4.88	3.50 DIA.	.38	2.75	7.06
	1.75 Oversize	2	2.38	.75							1.25-12		1.75				.50	3	7.31
8	1.38 Standard	1.63	2	.63	8.50	.75	.63	2	1.50	.56	1-14	5.13	1.38	3.38	6.44	3.50 DIA.	.38	2.75	7.31
	1.75 Oversize	2	2.38	.75							1.25-12		1.75				.50	3	7.56
10	1.75 Standard	2	2.38	.75	10.63	1	.63	2.25	2	.69	1.25-12	6.38	1.75	4.31	7.92	3.50 DIA.	.50	3.06	8.94
	2 Oversize	2.25	2.63	.88			.75				1.50-12		2			5 DIA.	.38	3.19	9.06
12	2 Standard	2.25	2.63	.88	12.75	1	.75	2.25	2	.69	1.50-12	6.88	2	4.81	9.40	5 DIA.	.38	3.19	9.56
	2.50 Oversize	3	3.13	1							1.88-12		2.50				.50	3.44	9.81

SERIES 'TA' DIMENSIONS: PIVOT MOUNTS

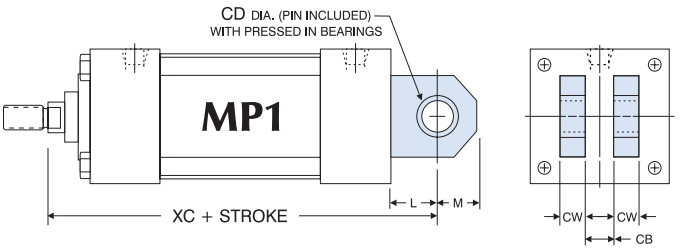

EXTRUDED MP1 MOUNT

(EXTRUDED: 1.50" - 8" BORES, WELDMENT: 10" & 12" BORES)

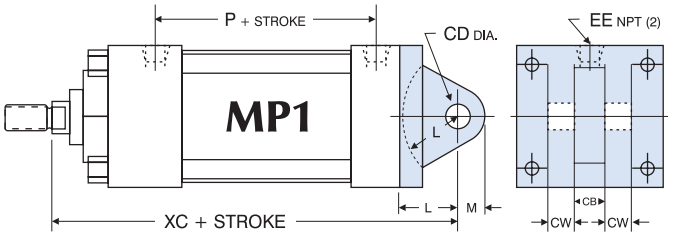

IRON CASTING MP1 MOUNT

*(OPTIONAL)***

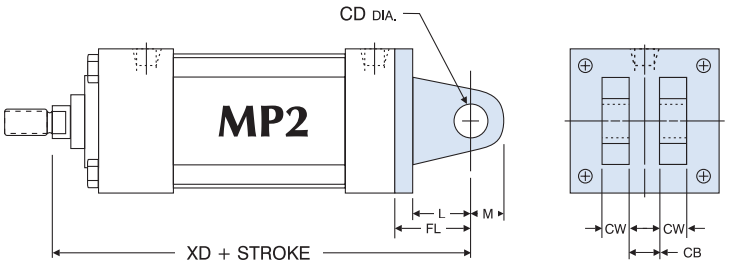

MP2 MOUNT

(IRON CASTING)

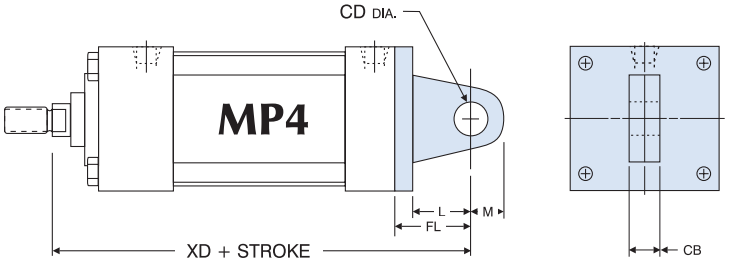

MP4 MOUNT

(IRON CASTING: 1.50" - 4" BORES, WELDMENT: 5" - 6" BORES)*

'MP1', 'MP2' CLEVIS AND 'MP4' EYE MOUNT DIMENSIONS										ACCESSORIES *(SEE PAGES 101-102 FOR DIMENSIONS)*				
BORE	ROD DIAMETER	CB	CD	CW	FL	L	M	XC	XD	ROD CLEVIS	ROD EYE	CLEVIS PIN	EYE BRACKET *(FOR MP1)*	CLEVIS BRKT *(FOR MP4)*
1.50	.63 Standard	.75	.50	.50	1.13	.75	.63	5.38	5.75	RC437	RE437	CP500	EB500	CB500
	1 Oversize							5.75	6.13	RC750	RE750	CP750		
2	.63 Standard	.75	.50	.50	1.13	.75	.63	5.38	5.75	RC437	RE437	CP500		
	1 Oversize							5.75	6.13	RC750	RE750	CP750		
2.50	.63 Standard	.75	.50	.50	1.13	.75	.63	5.50	5.88	RC437	RE437	CP500		
	1 Oversize							5.88	6.25	RC750	RE750	CP750		
3.25	1 Standard	1.25	.75	.63	1.88	1.25	.88	6.88	7.50	RC750	RE750	CP750	EB750	CB750
	1.38 Oversize							7.13	7.75	RC1000	RE1000	CP1000		
4	1 Standard	1.25	.75	.63	1.88	1.25	.88	6.88	7.50	RC750	RE750	CP750		
	1.38 Oversize							7.13	7.75	RC1000	RE1000	CP1000		
5*	1 Standard	1.25	.75	.63	1.88	1.25	.88	7.13	7.75	RC750	RE750	CP750		
	1.38 Oversize							7.38	8	RC1000	RE1000	CP1000		
6*	1.38 Standard	1.50	1	.75	2.25	1.50	1	8.13	8.88	RC1000	RE1000	CP1000	EB1000	CB1000
	1.75 Oversize							8.38	9.13	RC1250	RE1250	CP1375		
8	1.38 Standard	1.50	1	.75	N/A	1.50	1	8.25	N/A	RC1000	RE1000	CP1000		
	1.75 Oversize							8.50		RC1250	RE1250	CP1375		
10	1.75 Standard	2	1.38	1	N/A	2.13	1.38	10.38	N/A	RC1250	RE1250	CP1375	EB1375	CB1375
	2 Oversize							10.50		RC1500	RE1500	CP1750	EB1750	CB1750
12	2 Standard	2.50	1.75	1.25	N/A	2.25	1.75	11.13	N/A	RC1500	RE1500	CP1750		
	2.50 Oversize							11.38		RC1875	N/A	CP2000		

Clevis pins are provided with pivot mounts.
*MP4 5"-6" bores are 5-7 day delivery.
For dimensions not shown, see page 6.

**Extruded MP1 mounts are standard (1.50"-8" bores). Cast Iron removable mounts are optional, and must be requested when ordering (1.50"-6" bores). Specify "CAST MP1" when ordering.

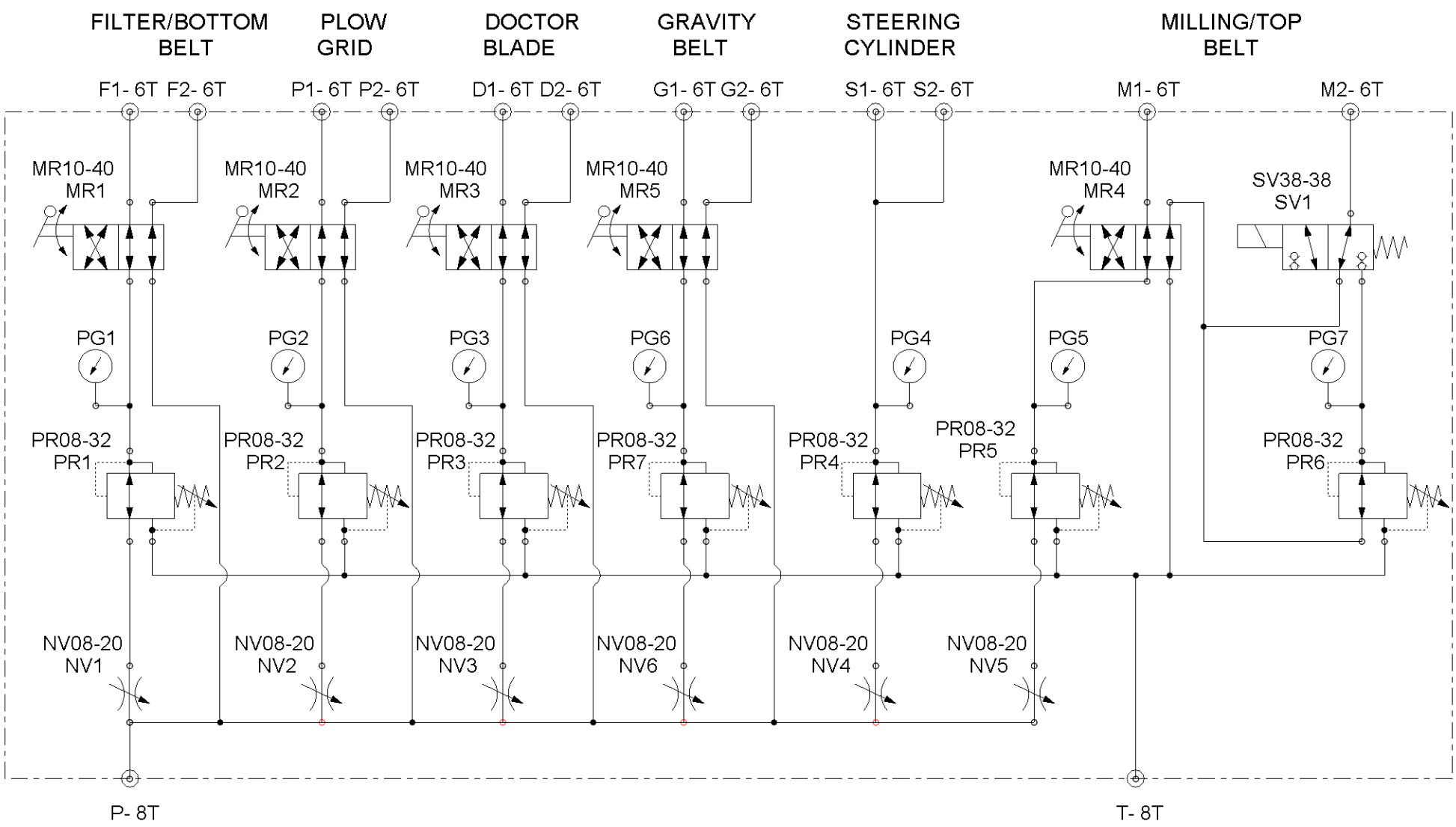

HYDRO AIR

HA62164

Rev: 1
By: FLM
Date: 4/18/2011 3:00:23 PM

This Page Intentionally Left Blank

HA62346 ASSEMBLY INSTRUCTIONS

3.9.12 FLM

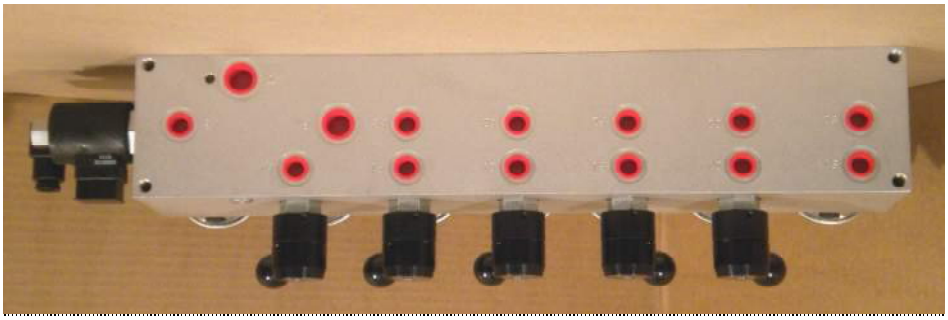

All (5) travel through the arc shown. No mid-point detent.

MR10-40-0-N (5)
5342060 Lever Kit (5)

Plug supplied with manifold

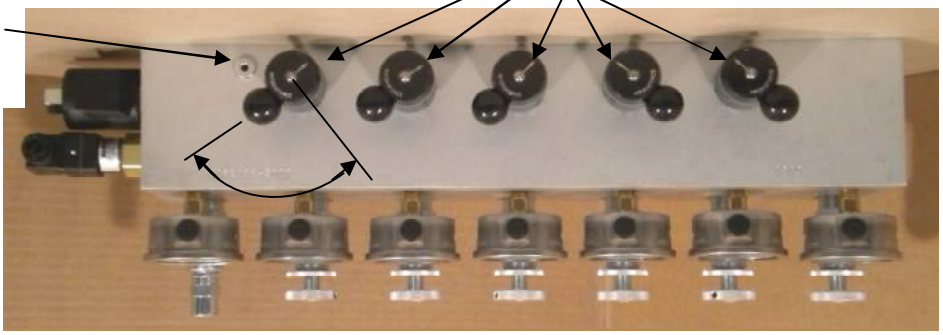

25-911-600-PSI/BAR (7)

HA62346-2001

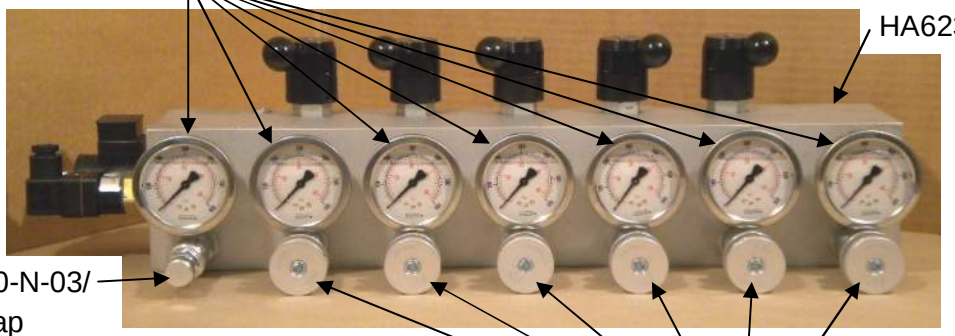

PR08-32A-0-N-03/
7006700 Cap

PR08-32B-0-N-03/ (6)

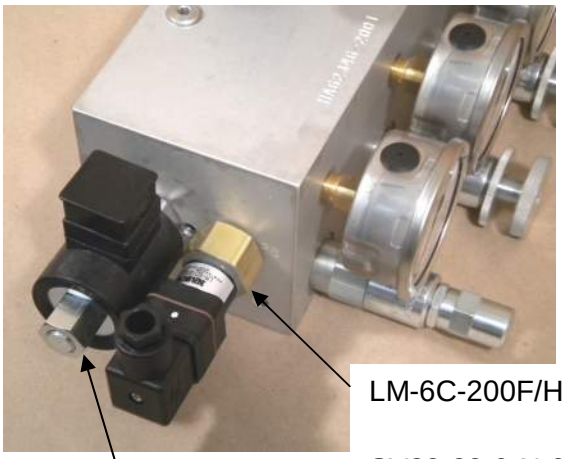

LM-6C-200F/HR

SV38-38-0-N-00
6366115 Coil

This Page Intentionally Left Blank

SV38-38 Double Blocking, 2 Position, 3-Way, N.C.

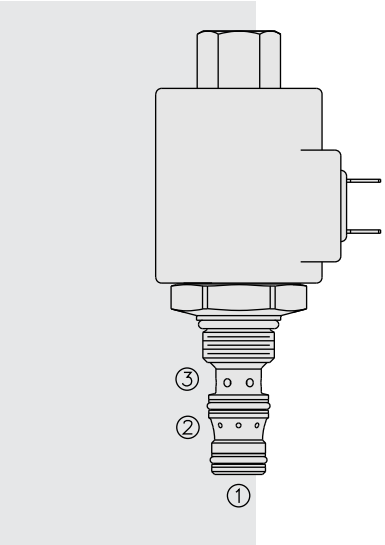

SYMBOLS

USASI/ISO:

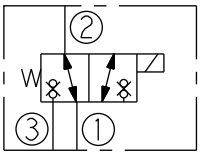

PERFORMANCE (Cartridge Only)

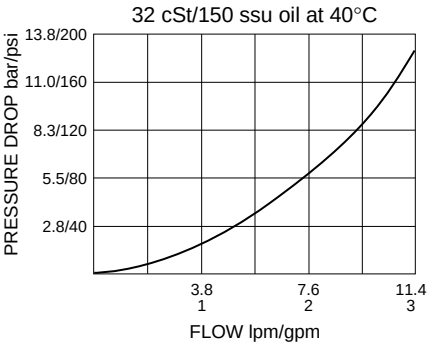

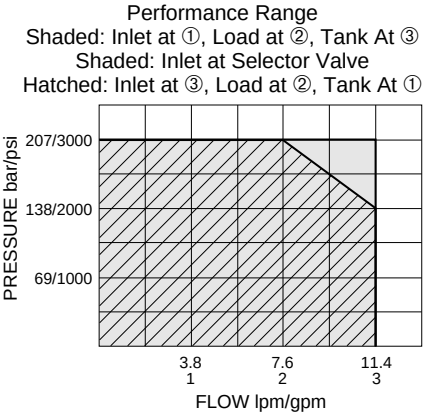

DESCRIPTION

A solenoid-operated, two-position, three-way, bi-directional blocking, screw-in hydraulic cartridge valve. It is designed for low leakage in load-holding applications.

OPERATION

When de-energized, the **SV38-38** blocks flow from ③ to ② or from ② to ③.
When energized, flow is blocked from ② to ① or from ① to ②.

FEATURES

- Continuous-duty rated solenoid.
- Hardened seat for long life and low leakage.
- Optional coil voltages and terminations.
- Efficient wet-armature construction.
- Cartridges are voltage interchangeable.
- Optional waterproof E-Coils rated up to IP69K.
- Unitized, molded coil design.
- Industry-common cavity.

RATINGS

Operating Pressure: 207 bar (3000 psi)

Flow: See Performance Chart

Internal Leakage: 0.25 cc/minute (5 drops/minute) at 207 bar (3000 psi)

Temperature: -40 to 100°C with standard Buna seals;
-26 to 204°C with Fluorocarbon seals; -54 to 107°C with Polyurethane seals

Coil Duty Rating: Continuous from 85% to 115% of nominal voltage

Initial Coil Current Draw at 20°C: Standard Coil: 1.67 amps at 12 VDC;
0.18 amps at 115 VAC (full wave rectified).
E-Coil: 1.7 amps at 12 VDC; 0.85 amps at 24 VDC

Minimum Pull-in Voltage: 85% of nominal at 207 bar (3000 psi)

Filtration: See page 9.010.1

Fluids: Mineral-based or synthetics with lubricating properties at viscosities of 7.4 to 420 cSt (50 to 2000 sus); See Temperature and Oil Viscosity, page 9.060.1

Installation: No Restrictions; See page 9.020.1

Cavity: VC08-3; See page 9.108.1

Cavity Tool: CT08-3XX; See page 8.600.1

Seal Kit: SK08-3X-MM; See page 8.650.1

Coil Nut: Part No. 7004420;
For E-coils manufactured prior to 1-1-04, see page 3.400.1 for coil nut info.

DIMENSIONS

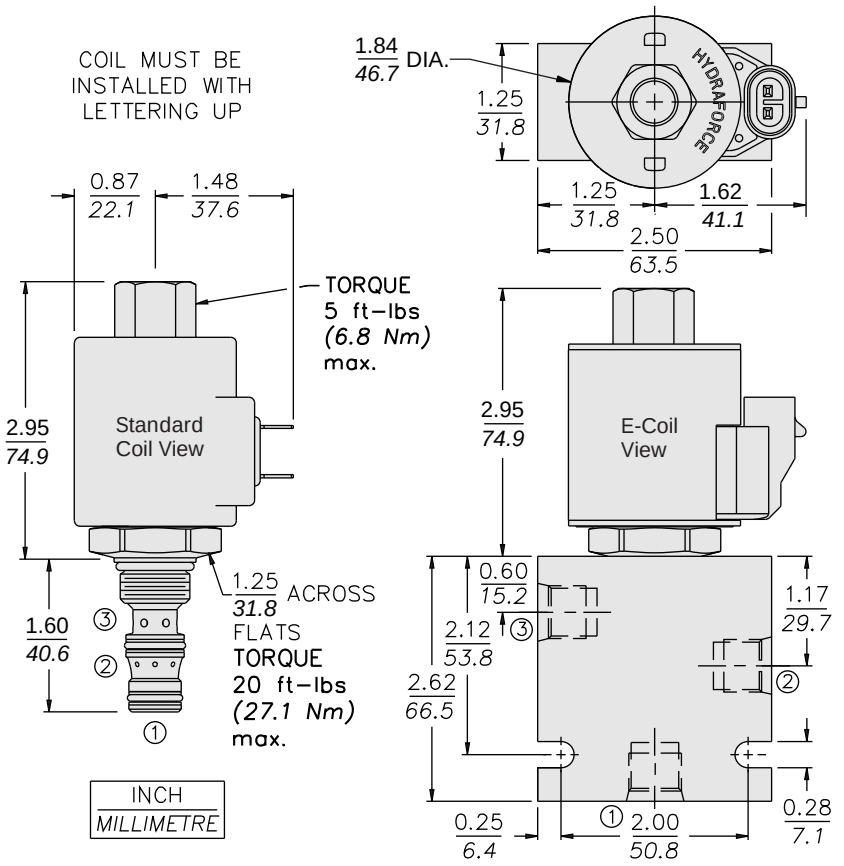

MATERIALS

Cartridge: Weight: 0.13 kg. (0.28 lbs.); Steel with hardened work surfaces. Zinc-plated exposed surfaces. Buna N O-rings and polyester elastomer back-up standard.

Standard Ported Body: Weight: 0.27 kg. (0.60 lbs.); Anodized high-strength 6061 T6 aluminum alloy, rated to 207 bar (3000 psi). Ductile iron bodies available; dimensions may differ. See page 8.008.1.

Standard Coil: Weight: 0.27 kg. (0.60 lbs.); Unitized thermoplastic encapsulated, Class H high temperature magnetwire. See page 3.200.1.

E-Coil: Weight: 0.41 kg. (0.9 lbs.); Fully encapsulated with rugged external metal shell. Rated up to IP69K with integral connectors. **Note: See page 3.400.1 for all E-Coil retrofit applications.**

TO ORDER

SV38-38__ - ___ - __ - ____

Option
None (Blank)

Porting
Cartridge Only **0**
~~SAE 6 **6T**~~
1/4 in. BSP* **2B**
*BSP Body; U.K. Mfr. Only

Seals
Buna N (Std.) **N**
~~Fluorocarbon **V**~~
Polyurethane **P**

Voltage
Std. Coil
0 Less Coil**
~~**10** 10 VDC†~~
12 12 VDC
24 24 VDC
36 36 VDC
48 48 VDC
24 24 VAC
115 115 VAC
230 230 VAC
**Includes Std. Coil Nut
† DS, DW or DL terminations only.

E-Coil
10 10 VDC
12 12 VDC
20 20 VDC
24 24 VDC

Termination (VDC)
Std. Coil
DS Dual Spades
DG DIN 43650
DL Leadwires (2)
DL/W Leads w/Weatherpak® Connectors
DR Deutsch DT04-2P

Termination (VAC)
Std. Coil
AG DIN 43650
AP 1/2 in. Conduit

Termination (VDC)
E-Coil
ER Deutsch DT04-2P (IP69K Rated)
EY Metri-Pack® 150 (IP69K Rated)

Coils with internal diode are available. Consult factory.

MR10-40 Manual Rotary 4-Way, 2-Pos. Directional Valve

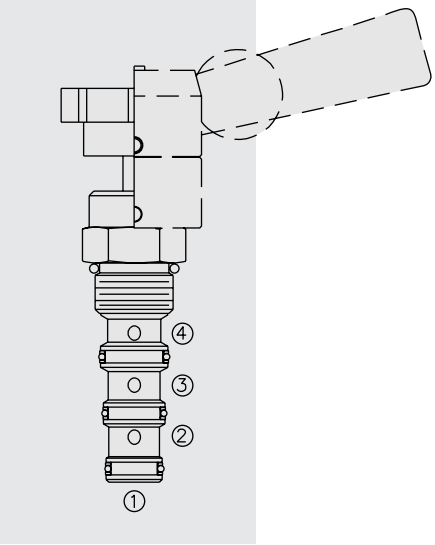

DESCRIPTION

A manually-operated four-way, two-position directional valve, with adaptability to a variety of adjustment operators (ordered separately).

OPERATION

Two positions, 90° rotation. In extreme counterclockwise position, ports ① and ④ are open while ports ② and ③ are open. In extreme clockwise position, ports ① and ② are open while ports ③ and ④ are open. All ports are closed in transition.

FEATURES

- Two position detent or infinite friction lock operators may be ordered separately.
- May be fully pressurized at all ports.
- Optional lock-down bracket.
- Heavy-duty construction.
- Industry common cavity.

RATINGS

Operating Pressure: 240 bar (3500 psi)

Max. Flow: See Performance Chart

Internal Leakage: 164 cc/minute (10 cu. in./minute) at 240 bar (3500 psi)

Temperature: -40 to 120°C with standard Buna N seals

Fluids: Mineral-based or synthetics with lubricating properties at viscosities of 7.4 to 420 cSt (50 to 2000 sus); See Temperature and Oil Viscosity, page 9.060.1

Installation: No position restrictions; See page 9.020.1
See page 4.990.2 for operator handles/knobs installation;
See page 4.990.1 for lock-down bracket installation.

Cavity: VC10-4; See page 9.110.1

Cavity Tool: CT10-4XX; See page 8.600.1

Seal Kit: SK10-4X-MMM; See page 8.650.1

Lock-Down Bracket Kit: Part Number 5399000

SYMBOLS

USASI/ISO:

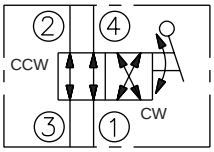

TRANSITION:

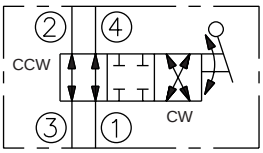

PERFORMANCE (Cartridge Only)

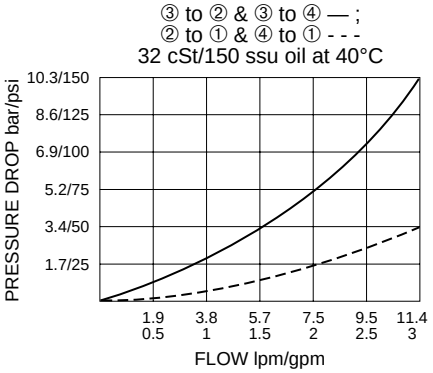

DIMENSIONS

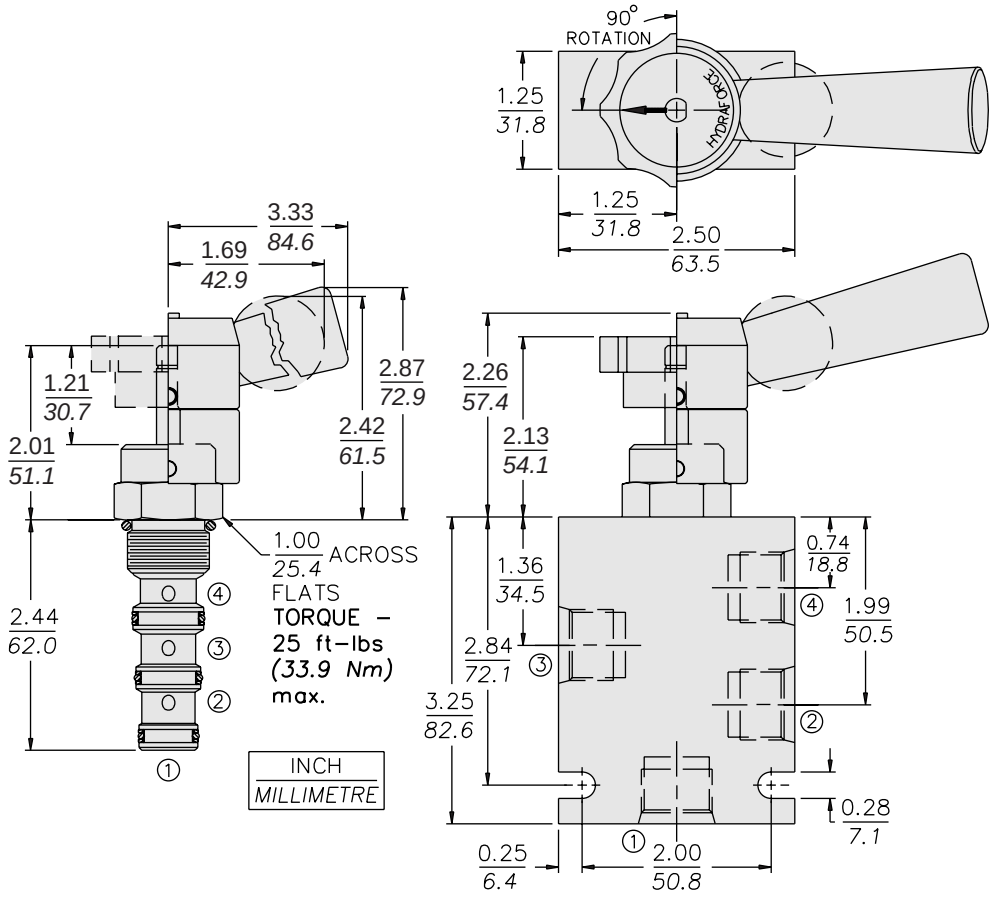

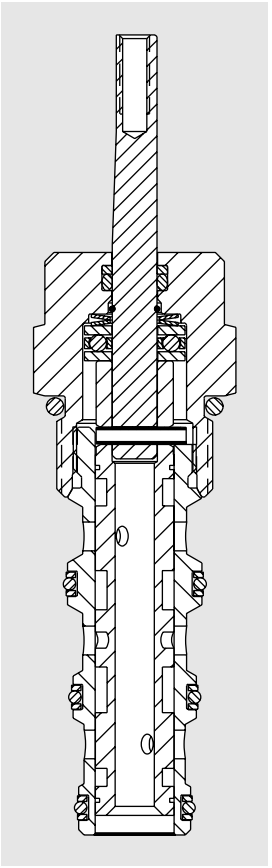

MATERIALS

Cartridge: Weight: 0.13 kg. (0.29 lbs.) Steel with hardened work surfaces. Zinc-plated exposed surfaces. Buna N O-rings and Fluorocarbon back-ups standard.

Standard Ported Body: Weight: 0.34 kg. (0.75 lbs.) Anodized high-strength 6061 T6 aluminum alloy, rated to 207 bar (3000 psi). Ductile iron bodies available; dimensions may differ. See page 8.010.1

Lever-Type Handle: (Sold Separately) Weight: 0.18 kg. (0.38 lbs.); Steel with hardened work surfaces. Zinc-plated exposed surfaces. Plastic lever arm.

TO ORDER

MR10-40 __ - __ __ __ - __

Option
None (Blank)

Seals
N Buna N (Std.)
V Fluorocarbon

Porting

Cartridge Only	**0**
SAE 6	**6T**
SAE 8	**8T**
SAE 8 with Lock-Down Bracket	**8TL**
1/4 in. BSP*	**2B**
3/8 in. BSP*	**3B**

*BSP Body; U.K. Mfr. Only

NOTE: To order standard operator kits, refer to pages 4.770.1 and 4.770.2

ABS & Stainless Steel Liquid Filled

900 SERIES

- Extremely high quality pressure gauges, liquid filled for extended service life and shock resistance
- Ranges available from vacuum to 15,000 psi
- 1-1/2, 2, 2-1/2, 4 inch sizes – bottom or back connected
- Lightweight shatter-resistant ABS or 304 Stainless steel case, Plexiglass™ lens for extra strength
- Unique o-ring case and connection seals guard against leakage and protect against shock and vibration
- Relief disc on top or back provides positive case relief
- Brass and copper alloy movement
- High grade Glycerine fill dampens the effects of pulsation, vibration and shock loads, and provides lubrication of the movement
- Volume oriented
- Stock availability

OPERATING SPECIFICATIONS

1. Working Pressure Limitations

a. **Dynamic Pressure**
The working pressure should be limited to 60% of the dial range

b. **Static Pressure**
The working pressure, when no sharp fluctuations occur, should be limited to 90% of the dial range.

2. Ambient Temperature
-4°F to 140°F (-20°C to 60°C) Glycerine Fill
-40°F to 140°F (-40°C to 60°C) Special Fill

3. Media Temperature
-4°F to 140°F (-20°C to 60°C) Glycerine Fill
-40°F to 140°F (-40°C to 60°C) Special Fill

APPLICATIONS

- Industrial applications where pulsation, vibration and shock are present

ACCURACY

- 1-1/2 and 2 inch 900 Series Gauges: ±2.5%
- 2-1/2 inch 900 Series Gauges: ±1.5%
- 4 inch 900 Series Gauges: ±1.0%

For details on accuracy/standard dial configuration and dial layouts, see pages 74-78

	MODELS	SPECIFICATIONS
Case	15-910, 25-900, 25-910	ABS (Acryl Nitril Butadien Styrol)
	25-901, 25-911, 40-901, 40-911	304 Stainless steel
Bezel	25-901, 25-911, 40-901, 40-911	304 Stainless steel
Lens	15-910, 25-900, 25-910	Plexiglass™; ultrasonically welded to the case
	25-901, 25-911	Polycarbonate
	40-901, 40-911	Instrument glass
Bourdon Tube	15-910, 25-900, 25-910, 25-901, 25-911, 40-901, 40-911 **(up to 600 psi)**	Phosphor bronze "C" tube
	15-910, 25-900, 25-910, 25-901, 25-911, 40-901, 40-911 **(greater than 600 psi)**	Coiled safety tube
Connection	15-910	1/8″ NPT brass
	25-900, 25-910, 25-901, 25-911,	1/4″ NPT brass
	40-901, 40-911	1/4″ NPT brass or 1/2″ NPT brass
Movement	15-910, 25-900, 25-910, 25-901, 25-911, 40-901, 40-911	Brass and nylon with highly polished bearing surfaces
Safety Protection	15-910	Safety relief disc on the back of the case
	25-900, 25-910, 25-901, 25-911, 40-901, 40-911	Safety relief disc on the top of the case
Accuracy	15-910, 20-901, 20-911	± 2.5% Full Scale ASME grade B
	25-900, 25-910, 25-901, 25-911	± 1.5% Full Scale ASME grade A
	40-901, 40-911	± 1% Full Scale ASME grade 1A
Pointer	15-910, 25-900, 25-910, 25-901, 25-911	Molded plastic
	40-901, 40-911	Balanced aluminum, black finish
Dial	15-910, 25-900, 25-910	Molded plastic, white background with black psi scale and red kPa scale. UV resistant
	25-901, 25-911, 40-901, 40-911	Aluminum, white background, dual scale psi – kPa. black psi scale and Red kPa scale. UV resistant
Fill Liquid	15-910, 25-900, 25-910, 25-901, 25-911, 40-901, 40-911	Glycerine and water

ORDERING INFORMATION

SERIES	**900**						
SIZE	**15**	1-1/2 Inch	**20**	2 Inch	**25**	2-1/2 Inch	**40**	4 Inch
CASE TYPE	**900**	ABS Case, Liquid Filled, Bottom Connection			**910**	ABS Case, Liquid Filled, Back Connection		
	901	SS Case, Liquid Filled, Bottom Connection			**911**	SS Case, Liquid Filled, Back Connection		
PRESSURE RANGES	**30 ″ Vac**	-30 inHg to 0	**30/300**	-30 inHg to 0 to 300 psi	**300**	0 psi to 300 psi	**3000**	0 psi to 3000 psi
	30/15	-30 inHg to 0 to 15 psi	**15**	0 psi to 15 psi	**400**	0 psi to 400 psi	**5000**	0 psi to 5000 psi
	30/30	-30 inHg to 0 to 30 psi	**30**	0 psi to 30 psi	**600**	0 psi to 600 psi	**6000**	0 psi to 6000 psi
	30/60	-30 inHg to 0 to 60 psi	**60**	0 psi to 60 psi	**800**	0 psi to 800 psi	**7500**	0 psi to 7500 psi
	30/100	-30 inHg to 0 to 100 psi	**100**	0 psi to 100 psi	**1000**	0 psi to 1000 psi	**10000**	0 psi to 10000 psi
	30/160	-30 inHg to 0 to 160 psi	**160**	0 psi to 160 psi	**1500**	0 psi to 1500 psi	**15000**	0 psi to 15000 psi
	30/200	-30 inHg to 0 to 200 psi	**200**	0 psi to 200 psi	**2000**	0 psi to 2000 psi		
SCALE OPTION	**psi**	psi single scale	**psi/kPa**	psi/kPa dual scale	**psi/kg/cm²**	psi/kg/cm² dual scale	**psi/bar**	psi/bar dual scale
CONNECTION SIZE	**1/8**	1/8″ NPT	**1/4**	1/4″ NPT	**1/2**	1/2″ NPT		
OPTIONS	**CFR**	Chrome flange ring	**CCR**	Chrome cover ring	**CFF**	Chrome front flange	**ST**	Stainless steel tagging
	SSFR	304SS flange ring	**SSCR**	304SS cover ring	**SSFF**	304SS front flange	**BP3**	Brass press fit orifice 0.3 mm
	PMC	Steel panel mount clamp	**MIP**	Maximum indicating pointer	**SSRF**	304SS rear flange	**BT5**	Brass threaded orifice 0.5 mm
	SPMC	304SS panel mount clamp	**AP**	Adjustable pointer	**BCR**	Black cover ring	**BT8**	Brass threaded orifice 0.8 mm
	SSB-U	Stainless steel bezel & u-clamp	**SGL**	Safety glass lens	**LM**	Laser marking	**7/16″ -20**	Straight thread available*
	SSB	Stainless steel bezel	**BLFF**	Black front flange				

Please consult your local NOSHOK Distributor or NOSHOK, Inc. for availability and delivery information.

NOTE: Refer to 900 Series Options & Accessories chart on page 67 for availability by model number.

* Includes Viton® O-Ring

EXAMPLE

25-910 - 1000 psi/kPa - 1/4″ - PMC

1. **Select model number (size & case type)**
2. **Select pressure range & scale option**
3. **Select connection size (if more than one is offered)**
4. **Select any required accessory or option**

OUTLINE DIMENSIONS

25-900

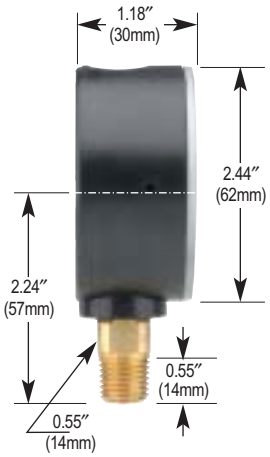

25-901

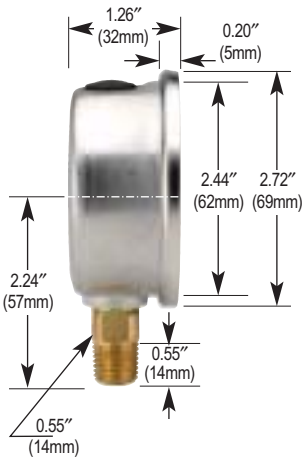

40-901

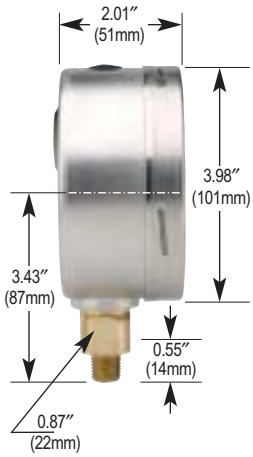

Dimensions

15-910

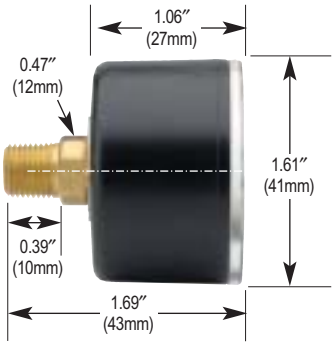

25-910

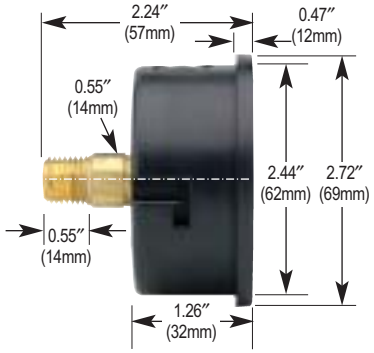

25-911

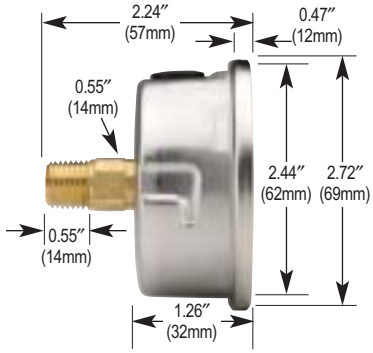

25-900 Front Flange

40-901 Front Flange

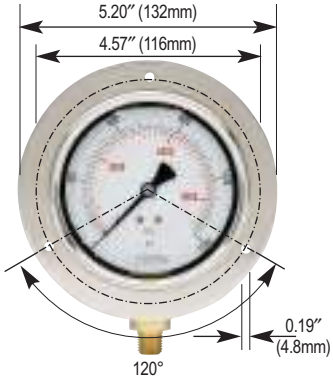

25-910 Front Flange

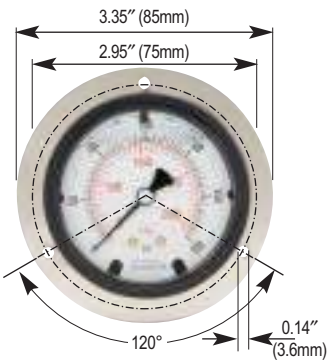

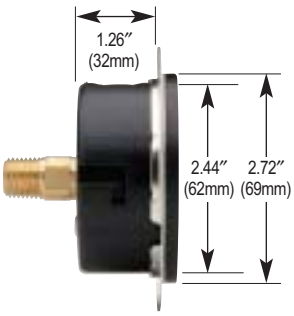

This Page Intentionally Left Blank

PR08-32 Pressure Reducing/Relieving

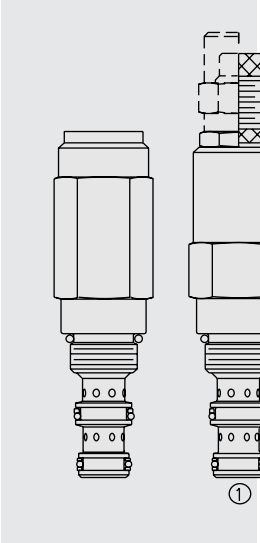

SYMBOLS

USASI/ISO:

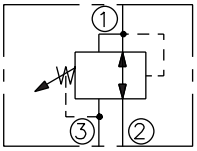

PERFORMANCE (Cartridge Only)

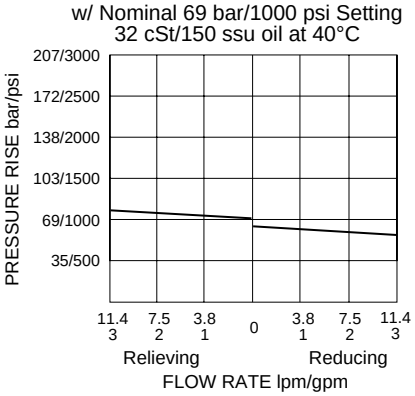

DESCRIPTION

A screw-in, cartridge-style, direct-acting, spool-type, hydraulic pressure reducing/relieving valve with internal pilot and internal spring chamber drain, designed to act as a pressure-regulating device for secondary circuits. It is intended for use in stable input flow circuits.

OPERATION

In its steady state, the **PR08-32** allows flow to pass bidirectionally from ② to ①, with the spring chamber constantly drained at ③.

On attainment of a pre-determined pressure at ①, the cartridge shifts to block flow at ②, thereby regulating pressure at ①. In this mode, the valve also will relieve ① to ③ at a variable value over the set reducing pressure.

Note: Direct-acting PR series valves may not be suitable for some static load applications. Consult factory.

FEATURES

- Adjustments cannot be backed out of the valve.
- Adjustments prohibit springs from going solid.
- Optional spring ranges to 152 bar (2200 psi).
- Hardened spool and cage for long life.
- Industry common cavity.
- Compact size.

RATINGS

Operating Pressure: 240 bar (3500 psi)

Proof Pressure: 390 bar (5700 psi)

Flow: 11.4 lpm (3 gpm) max.

Internal Leakage ② to ③: 82 cc/minute (5 cu. in/minute) max. at 207 bar (3000 psi) to 90% of nominal setting

Standard Spring Ranges (Reducing Function):
3.4 to 20.7 bar (50 to 300 psi);
10.4 to 41.4 bar (150 to 600 psi);
20.7 to 82.8 bar (300 to 1200 psi);
34.5 to 151.7 bar (500 to 2200 psi)

Temperature: -40 to 120°C with standard Buna seals

Filtration: See page 9.010.1

Fluids: Mineral-based or synthetics with lubricating properties at viscosities of 7.4 to 420 cSt (50 to 2000 sus); See Temperature and Oil Viscosity, page 9.060.1

Installation: No restrictions; See page 9.020.1

Cavity: VC08-3; See page 9.108.1

Cavity Tool: CT08-3XX; See page 8.600.1

Seal Kit: SK08-3X-BM; See page 8.650.1

DIMENSIONS

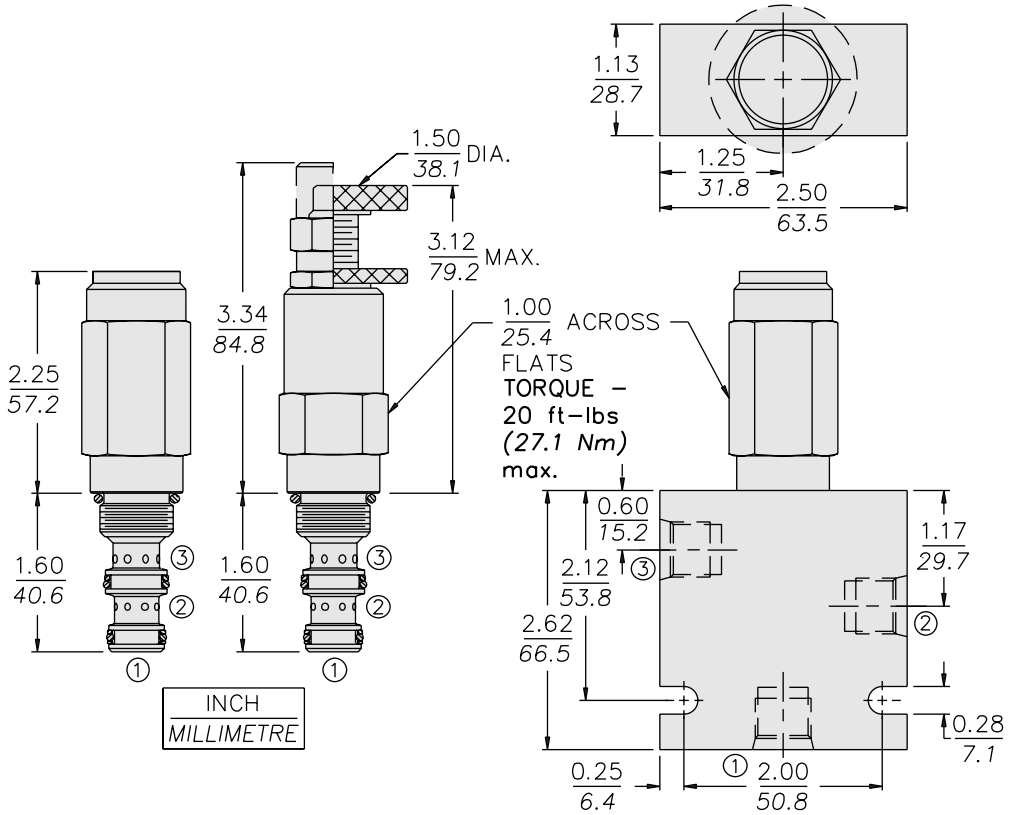

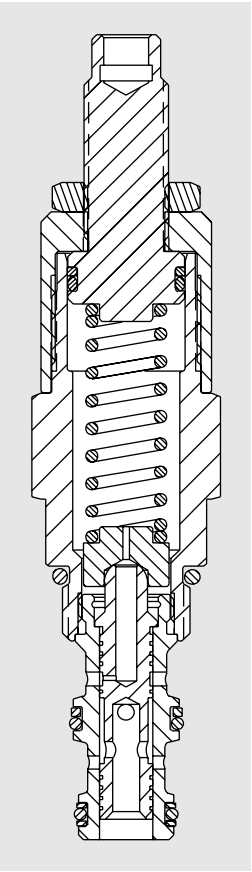

MATERIALS

Cartridge: Weight: 0.25 kg. (0.55 lbs.) Steel with hardened work surfaces. Zinc-plated exposed surfaces. Buna N O-rings and back-ups standard. Anodized aluminum knob.

Standard Ported Body: Weight: 0.27 kg. (0.60 lbs.) Anodized high-strength 6061 T6 aluminum alloy, rated to 207 bar (3000 psi). Ductile iron bodies available; dimensions may differ.
See page 8.008.1

TO ORDER

PR08-32__ - __ __ __ - __ - __ __ / __ __ __ __

Adjustment Option
- 1/4 in. Hex Allen Head **A**
- 1-1/2 in. Dia. Alum. Knobs **B**
- Option A with Cover Cap **C**
- Factory Preset Non-Adjst. **F**
- Factory Preset; Hidden Adjustment **H**
- Option C w/ Lockwire Holes **L**

Porting
- Cartridge Only **0**
- SAE 4 **4T**
- SAE 6 **6T**
- 1/4 in. BSP* **2B**
- 3/8 in. BSP* **3B**

*BSP Body; U.K. Mfr Only

Seals
- Buna N (Std.) **N**
- Fluorocarbon **V**

Setting in bar†
- (Blank) for Adjustable, or Specify, for example:
- **M25** 25 bar
- **M100** 100 bar

Setting in psi†
- (Blank) for Adjustable, or Specify, for example:
- **9.0** 900 psi
- **21.0** 2100 psi

Spring Range
- **3** 3.4 to 20.7 bar (50 to 300 psi)
- **6** 10.4 to 41.4 bar (150 to 600 psi)
- **12** 20.7 to 82.8 bar (300 to 1200 psi)
- **22** 34.5 to 151.7 bar (500 to 2200 psi)

†Adjustable valves will be preset to approx. 50% of spring max. potential.

PR08-32 Pressure Reducing/Relieving

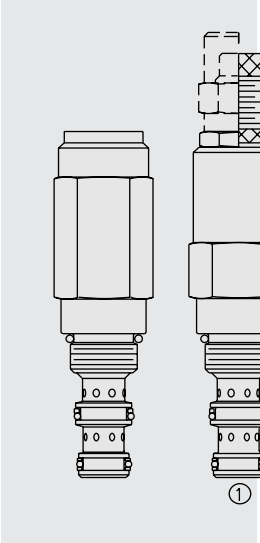

SYMBOLS

USASI/ISO:

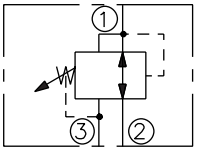

PERFORMANCE (Cartridge Only)

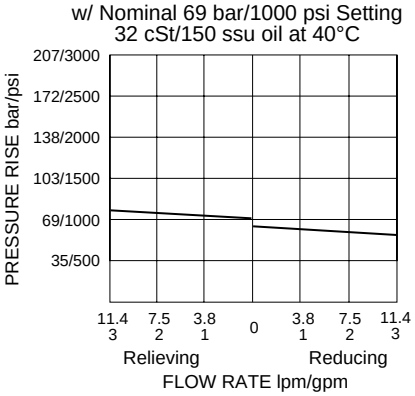

DESCRIPTION

A screw-in, cartridge-style, direct-acting, spool-type, hydraulic pressure reducing/relieving valve with internal pilot and internal spring chamber drain, designed to act as a pressure-regulating device for secondary circuits. It is intended for use in stable input flow circuits.

OPERATION

In its steady state, the **PR08-32** allows flow to pass bidirectionally from ② to ①, with the spring chamber constantly drained at ③.

On attainment of a pre-determined pressure at ①, the cartridge shifts to block flow at ②, thereby regulating pressure at ①. In this mode, the valve also will relieve ① to ③ at a variable value over the set reducing pressure.

Note: Direct-acting PR series valves may not be suitable for some static load applications. Consult factory.

FEATURES

- Adjustments cannot be backed out of the valve.
- Adjustments prohibit springs from going solid.
- Optional spring ranges to 152 bar (2200 psi).
- Hardened spool and cage for long life.
- Industry common cavity.
- Compact size.

RATINGS

Operating Pressure: 240 bar (3500 psi)

Proof Pressure: 390 bar (5700 psi)

Flow: 11.4 lpm (3 gpm) max.

Internal Leakage ② to ③: 82 cc/minute (5 cu. in/minute) max. at 207 bar (3000 psi) to 90% of nominal setting

Standard Spring Ranges (Reducing Function):
3.4 to 20.7 bar (50 to 300 psi);
10.4 to 41.4 bar (150 to 600 psi);
20.7 to 82.8 bar (300 to 1200 psi);
34.5 to 151.7 bar (500 to 2200 psi)

Temperature: -40 to 120°C with standard Buna seals

Filtration: See page 9.010.1

Fluids: Mineral-based or synthetics with lubricating properties at viscosities of 7.4 to 420 cSt (50 to 2000 sus); See Temperature and Oil Viscosity, page 9.060.1

Installation: No restrictions; See page 9.020.1

Cavity: VC08-3; See page 9.108.1

Cavity Tool: CT08-3XX; See page 8.600.1

Seal Kit: SK08-3X-BM; See page 8.650.1

DIMENSIONS

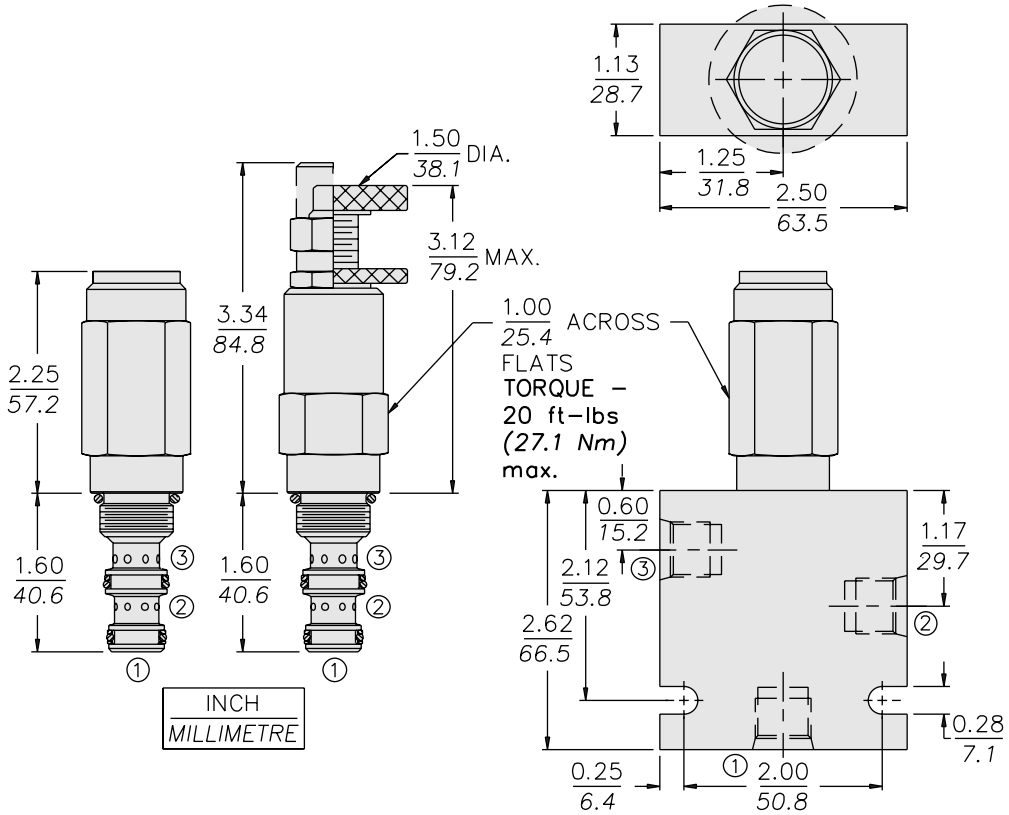

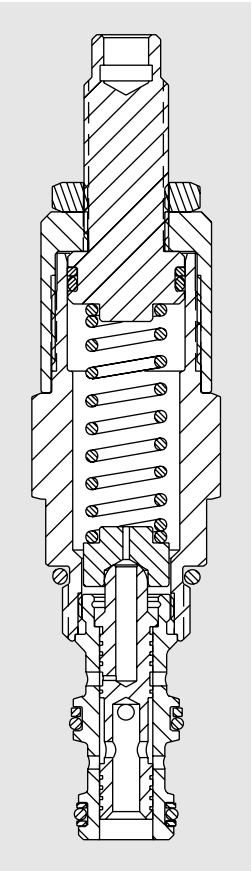

MATERIALS

Cartridge: Weight: 0.25 kg. (0.55 lbs.) Steel with hardened work surfaces. Zinc-plated exposed surfaces. Buna N O-rings and back-ups standard. Anodized aluminum knob.

Standard Ported Body: Weight: 0.27 kg. (0.60 lbs.) Anodized high-strength 6061 T6 aluminum alloy, rated to 207 bar (3000 psi). Ductile iron bodies available; dimensions may differ.
See page 8.008.1

TO ORDER

PR08-32 __ - __ __ __ - __ - __ __ / __ __ __ __

Ajustment Option
- 1/4 in. Hex Allen Head **A**
- 1-1/2 in. Dia. Alum. Knobs **B**
- Option A with Cover Cap **C**
- Factory Preset Non-Adjst. **F**
- Factory Preset; Hidden Adjustment **H**
- Option C w/ Lockwire Holes **L**

Porting
- Cartridge Only **0**
- SAE 4 **4T**
- SAE 6 **6T**
- 1/4 in. BSP* **2B**
- 3/8 in. BSP* **3B**

*BSP Body; U.K. Mfr Only

Seals
- Buna N (Std.) **N**
- Fluorocarbon **V**

Setting in bar†
- (Blank) for Adjustable, or Specify, for example:
- **M25** 25 bar
- **M100** 100 bar

Setting in psi†
- (Blank) for Adjustable, or Specify, for example:
- **9.0** 900 psi
- **21.0** 2100 psi

Spring Range
- **3** 3.4 to 20.7 bar (50 to 300 psi)
- **6** 10.4 to 41.4 bar (150 to 600 psi)
- **12** 20.7 to 82.8 bar (300 to 1200 psi)
- **22** 34.5 to 151.7 bar (500 to 2200 psi)

†Adjustable valves will be preset to approx. 50% of spring max. potential.

NV08-20 Needle Valve

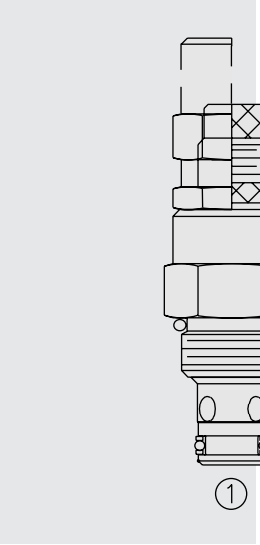

DESCRIPTION

A screw-in, cartridge-style, variable orifice, hydraulic flow restrictor valve.

OPERATION

The **NV08-20** increases its orifice value from fully closed to fully open with counterclockwise adjustment rotation.

FEATURES

- Adjustments cannot be backed out of the valve.
- Desired settings may be locked down.
- Hardened parts for long life.
- Aluminum knob option.
- Positive shut-off.
- Linear adjustment.
- Compact size.

RATINGS

Operating Pressure: 240 bar (3500 psi)

Flow: 42 lpm (11 gpm) nominal at 7 bar (100 psi) differential at full open 3.5 turns

Internal Leakage: 0.25 cc/minute (5 drop/minute) max. at shut-off

Adjustment Torque Required: 0.56 Nm (5 inch-pounds) at 7 bar (100 psi); 5.41 Nm (48 inch-pounds) at 207 bar (3000 psi)

Temperature: -40 to 120°C

Filtration: See page 9.010.1

Fluids: Mineral-based or synthetics with lubricating properties at viscosities of 7.4 to 420 cSt (50 to 2000 sus); See Temperature and Oil Viscosity, page 9.060.1

Installation: No restrictions; See page 9.020.1

Cavity: VC08-2; See page 9.108.1

Cavity Tool: CT08-2XX; See page 8.600.1

Seal Kit: SK08-2X-M; See page 8.650.1

SYMBOLS

USASI/ISO:

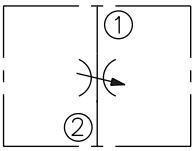

PERFORMANCE (Cartridge Only)

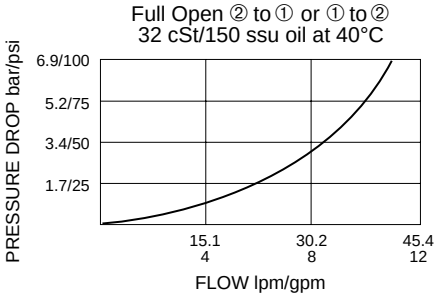

DIMENSIONS

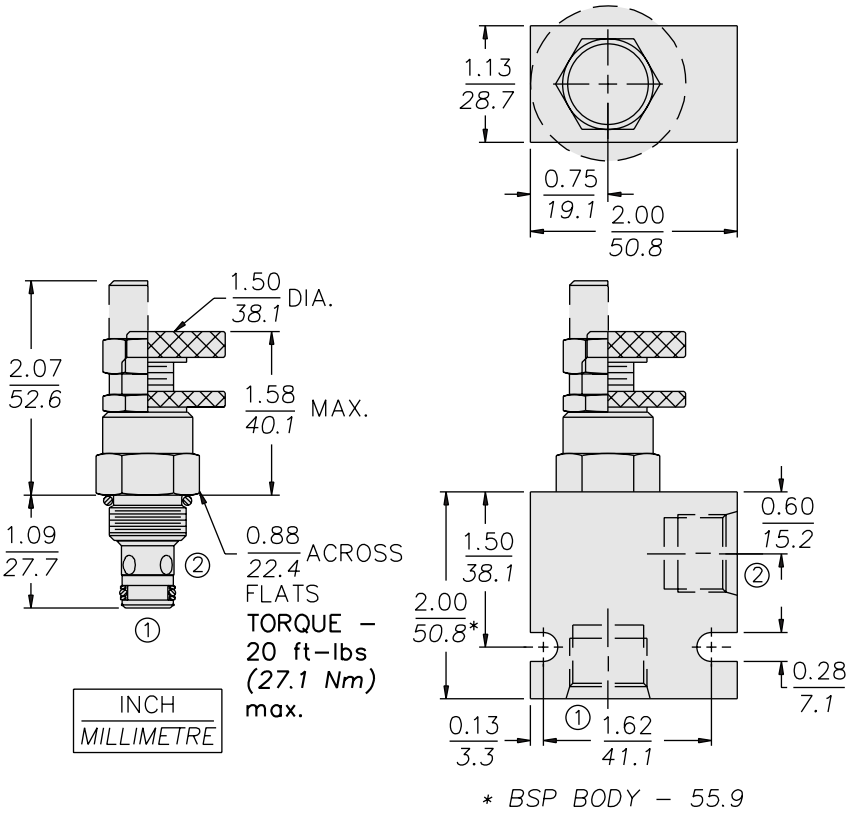

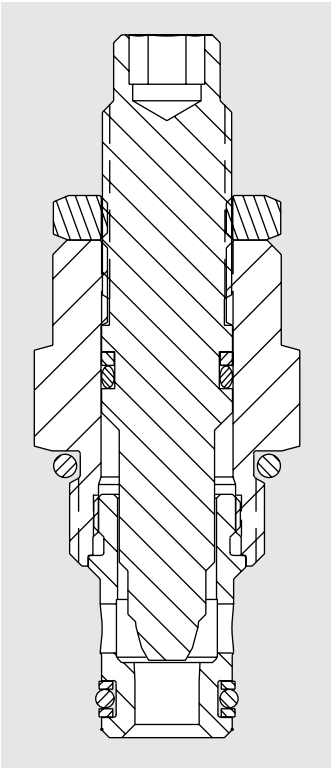

MATERIALS

Cartridge: Weight: 0.10 kg. (0.23 lbs.) Steel with hardened work surfaces. Zinc-plated exposed surfaces. Buna N O-rings and polyester elastomer back-ups standard. Anodized aluminum knobs.

Standard Ported Body: Weight: 0.16 kg. (0.35 lbs.) Anodized high-strength 6061 T6 aluminum alloy, rated to 207 bar (3000 psi). Ductile iron bodies available; dimensions may differ. See page 8.008.1

TO ORDER

NV08-20__ - __ __ __ - __

Adjustment Option

1/4 in. Hex Allen Head	**A**
1 1/2 in. Dia. Alum. Knobs	**B**
Option A with Cover Cap	**C**
Top Knob with Lock Nut	**D**
Top Knob Only	**E**
Lockwire Holes (with Option C)	**L**

Seals

N	Buna N (Std.)
V	Fluorocarbon

Porting

0	Cartridge Only
4T	SAE 4
6T	SAE 6
2B	1/4 in. BSP*
3B	3/8 in. BSP*
4B	1/2 in. BSP*

*BSP Body; U.K. Mfr. Only

SV1-10-4/4M/4R - Solenoid Valve

4-way, 2-position spool type solenoid valve
Up to 23 L/min (6 USgpm) • 210 bar (3000 psi)

A

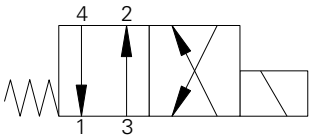

Operation

In the de-energized position this valve allows flow from port 4 to port 1 and from port 3 to port 2.

In the energized position flow is allowed from port 3 to port 4 and from port 2 to port 1

Features

Hardened, ground and honed working parts to limit leakage. IP69K Tough coil compatibility. Continuously rated. Compact design with low pressure drop. Rated pressure on all ports..

Sectional View

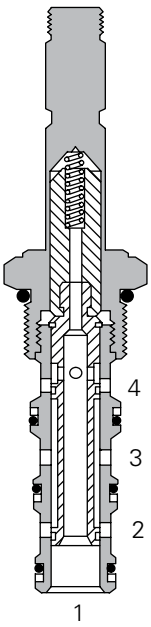

Performance Data

Ratings and Specifications

Performance data is typical with fluid at 21,8 cST (105 SUS) and 49°C (120°F)	
Typical application pressure (all ports)	210 bar (3000 psi)
Cartridge fatigue pressure (infinite life)	210 bar (3000 psi)
Rated flow	23 L/min (6 USgpm)
Internal leakage	164 cm^3/min (10 in^3/min) max @ 210 bar (3000 psi)
Temperature range	-40° to 120°C (-40° to 248°F)
Coil duty	Continuous from 85% to 110% of nominal voltage
Cavity	C-10-4
Fluids	All general purpose hydraulic fluids such as: MIL-H-5606, SAE 10, SAE 20, etc.
Filtration	Cleanliness code 18/**16/13**
Housing material (standard)	Aluminum
Weight including coil	0,44 kg (0.96 lbs)
Seal kit	889625 (Buna-N), 566080 (Viton®)

Viton is a registered trademark of E.I. DuPont

Description

This is a 4-way 2-position, direct acting, spool type solenoid valve. This valve can be used in applications where the motion of a double acting cylinder or a motor needs to be reversed.

Pressure Drop

Cartridge only

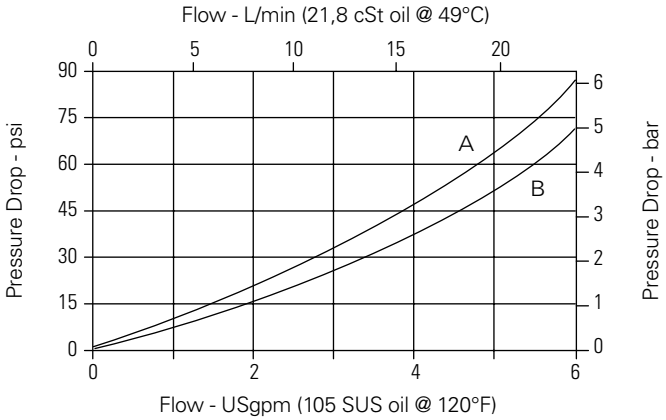

A - Port 4 to port 1
B - Port 3 to port 2

Where measurements are critical request certified drawings. We reserve the right to change specifications without notice.

EATON Powering Business Worldwide
Integrated Hydraulics An Eaton Brand

SV1-10-4/4M/4R - Solenoid Valve

4-way, 2-position spool type solenoid valve
Up to 23 L/min (6 USgpm) • 210 bar (3000 psi)

A

SV1 - 10 - 4 - 0 - 00

Model Code

SV1 – 10 (V) – 4 (*) – ** – ** * – 00**

1 2 3 4 5 6 7 8 9

1 Function
SV1 - Solenoid valve

2 Size
10 - 10 size

3 Seal Material
Blank - Buna-N
V - Viton®

4 Style
4 - 4-way, 2 position

5 Manual Override Option
Blank - No manual override
M - Knob type
R - Cable type

For valve dimensions with manual override option installed, see page A-980.

6 Port Size

Code	Port Size	Housing Number
0	Cartridge only	
3B	3/8" BSPP	02-179705*
6T	SAE 6	566161*
2G	1/4" BSPP	876709
3G	3/8" BSPP	876715
6H	SAE 6	876708
8H	SAE 8	876713

*Light duty housing.
See section J for housing details.

7 Voltage Rating
00 - No coil
12D - 12VDC
24D - 24VDC
36D - 36VDC
24A - 24VAC
115A - 115VAC
230A - 230VAC
12B - 12VDC/w diode*
24B - 24VDC/w diode*

*Optional arc suppression diode.

8 Connector Types
Blank - No coil
G - ISO 4400 DIN 43650
Q - Spade terminals
W - Flying lead
N - Deutsch (DC only)
Y - Amp JR (DC only)
D - Metripack 150 male (DC only)
J - Metripack 280 male (DC only)

For coil part numbers and dimensions see section C.

9 Special Features
00 - None

(Only required if valve has special features omitted if "00".)

Dimensions
mm (inch)

Torque cartridge in aluminum housing 47-54 Nm (33-46 ft lbs)

Note: When solenoid valve is ordered as cartridge only, nut is included.

Note: Use J series 23W coils with this solenoid valve.

Cartridge Only

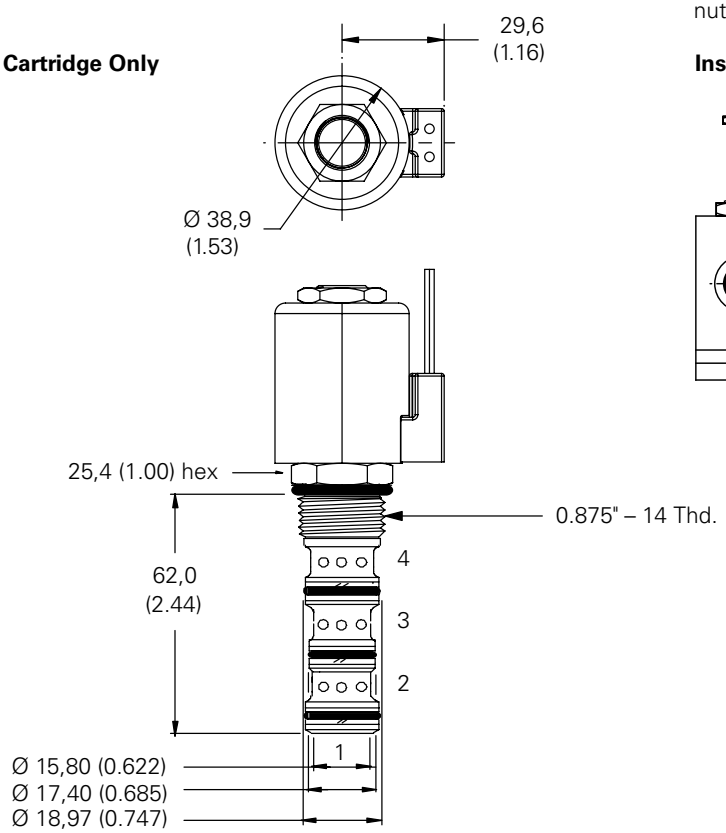

Installation Drawing

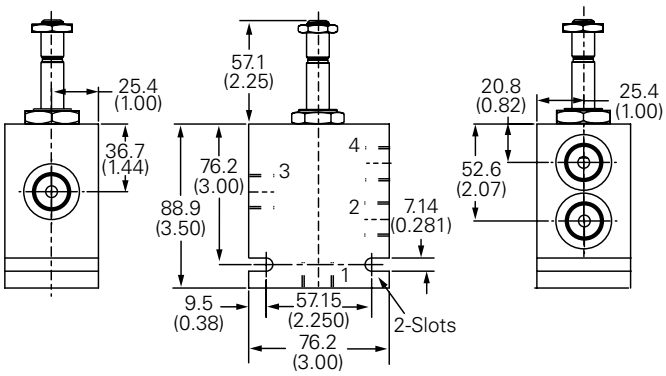

WARNING
Maintain 5-8 Nm (4-6 ft lbs) maximum torque on valve tube nut. Over tightening may cause valve failure.

ToughCoils™

Eaton/IH ToughCoils™ have been designed to provide industry leading environmental protection and solenoid performance in a compact and rugged package. ToughCoils™ with integrated connectors are rated up to IP69K environmental protection. ToughCoils™ are available with a variety of popular integrated connection options and with wire leads.

The best in class, one-piece, shell encapsulated, design meets the most stringent environmental requirements for mobile and industrial applications.

The exclusive compact coil design from Eaton/IH, offers the advantage of field retrofitability on all existing, and new, applications.

ToughCoils™ Features

IP69K Environmental Protection - This rating provides protection against the ingress of dust and high pressure jet stream. The IP69K test was designed specifically for rating protection against a high-pressure jet stream, high liquid temperature and close nozzle distance from the enclosure surface. IP69K protection is standard on coils with MetriPac or Deutsch, integrated connectors.

"Thermal Shock Dunk" Test - Eaton/IH ToughCoils have been qualified to withstand the toughest Mobile Equipment "Thermal Shock Dunk" tests. Integrated Deutsch, MetriPack[1] and Leadwire[2] connectors exceed "Thermal Shock Dunk" test qualifications at 140°C. The "Thermal Shock Dunk" test requires coils to be heated, reaching a stabilized temperature of 100°C, then immediately immersed in a solution at 0°C. The thermal shock is repeated five times with the coil monitored for dielectric strength in the solution and functional performance is verified.

In addition, ToughCoils™ passed a more severe powered dunk test conducted from 100° C to 0° C with 115% rated voltage applied.

[1]MetriPack® 150 and MetriPack® 280 are registered trade marks of Delphi Packard Electric Systems

[2]Coils with integrated connectors are recommended for applications in harsh environments.

Field Retrofitable - ToughCoils™ replace all current Eaton coils used on D Frame and Shell type coils. Compact coil dimensions allow substitution in all existing applications. ToughCoils are available for most 8, 10, 12, 16 and 20 series valves. No dditional water/weather proofing is required.

Steel Shell Encapsulated Design - ToughCoils™ provide protection against physical and environmental damage.

Eaton/IH ToughCoils™, with rated connector, meet or exceed all major OEM environmental protection requirements

Shown with deutsch connection options

C

Model Code

MCSC – * – * – * – ** – * – ** – 10**

1 2 3 4 5 6 7 8

1 Function
MCSC - Solenoid coil

2 Series
S - Size 8 (210 Bar)
P - Size 8 (350 Bar)
J - Size 10, 12, 16, 20 (210 Bar)
H - Size 10, 12, 16, 20 (350 Bar)

3 Voltage Rating
012 - 12 volt
024 - 24 volt
036 - 36 volt
048 - 48 volt
115 - 115 volt
230 - 230 volt

4 Voltage Type
D - DC
B - DC/with flyback diode
A - AC/with full bridge rectifier

5 Connector
G0 - ISO 4400 DIN 43650
Q0 - Spade Terminals
W0 - Flying lead
N0 - Deutsch Male, DT04-2P, Integrated (DC Only) Mating Connector: Deutsch DT06-2S
Y0 - Amp Jr (DC Only) Mating Connector: AMP 963040-3 or equivalent
D0 - MetriPack® 150 Male, Integrated (DC Only) Mating Connector: Delphi 12052641
J0 - MetriPack® 280 Male, Integrated (DC Only) Mating Connector: Delphi 15300027
E0 - Weather–Pack (Packard) female on wire leads Mating Connector: Delphi 12010973
F0 - Weather–Pack (Packard) male on wire leads Mating Connector: Delphi 12015792

Note: Auxillary parts for mating connectors may be required.

6 Lead Length
0 - None
A - 152mm [6.0 in] (Standard length with connector)
B - 610mm [24.0 in] (Standard length without connector)

7 Special Features
00 - None
(Only required if valve has special features, omitted if "00.")

8 Design Code
10 - Design code

Specifications

Ratings and Specifications

Duty Rating	Continuous from 85% to 110% of nominal voltage
Operating temperature	100°C (212°F) continuous @ nominal voltage
Lead Wires	18 gauge, standard 610 mm (24") long, UL style 3173 CSA CL 1251 (meets SAE J1128 XLPE style SXL)
Power Rating	S Series: 20W P Series: 23W J Series: 23W H Series: 29W
Encapsulent	Glass filled nylon
Magnet Wire	U.L. class N, 200°C (392°F) NEMA pub. No. MW 1000, section MW 35 – C (single)
Flyback diode (arc suppressor)	Maximum recurrent peak reverse voltage – 800 V (optional)

Environmental Protection

Connector	Ip65	Ip67	Ip69k	Thermal Shock Dunk
G0: DIN 43650	X*			
Q0: Spade				
Y0: Amp Jr.	X	X[1]*		
W0: Wire Leads	X	X		X[1]
N0: Deutsch	X	X	X	X
D0: Metri-Pack 150	X	X	X	X
J0: Metri-Pack 280	X	X	X	X

[1]Passed environmental testing, but not as robust as other connectors
*Rating dependent on mating connector

CAUTION
Coils may be hot to touch if used in continuous duty applications.

Where measurements are critical request certified drawings. We reserve the right to change specifications without notice.

EATON Powering Business Worldwide
Integrated Hydraulics An Eaton Brand

ToughCoils

For 10, 12, 16 and 20 Size Solenoid Valves
J & H Series Coils

300AA00____ (Complete Part number is 11 Digits)

Voltage	G0** Connector	Q0 Connector	W0 Connector	N0 Connector	Y0 Connector	D0 Connector	J0 Connector
12VDC	081A	089A	095A	101A	106A	111A	116A
24VDC	082A	090A	096A	102A	107A	112A	117A
36VDC	083A	091A	097A	103A	108A	113A	118A
24VAC	084A	092A	098A	–	–	–	–
115VAC	085A	–	–	–	–	–	–
230VAC	086A	–	–	–	–	–	–
12VDC*	087A	093A	099A	104A	109A	114A	119A
24VDC*	088A	094A	100A	105A	110A	115A	120A

*With flyback diode. (Voltage Type B)
**DIN 43560 mating connector for "G0" style coil – 02-166796.
For other voltages and connectors contact your Eaton representative.

Std. Voltages	Amperes*
12 DC	1.92
24 DC	0.96
36 DC	0.64
24 AC	1.06
115 AC	0.22
230 AC	0.11

Nominal voltage 25°C (77°F).

Voltage Type B

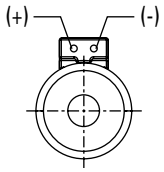

H Series ToughCoils part numbers - 300AA00____ (Complete Part number is 11 Digits)

Voltage	G0** Connector	Q0 Connector	W0 Connector	N0 Connector	Y0 Connector	D0 Connector	J0 Connector
12VDC	121A	129A	135A	141A	146A	151A	156A
24VDC	122A	130A	136A	142A	147A	152A	157A
36VDC	123A	131A	137A	143A	148A	153A	158A
24VAC	124A	132A	138A	–	–	–	–
115VAC	125A	–	–	–	–	–	–
230VAC	126A	–	–	–	–	–	–
12VDC*	127A	133A	139A	144A	149A	154A	159A
24VDC*	128A	134A	140A	145A	150A	155A	160A

*With flyback diode. (Voltage Type B)
**DIN 43560 mating connector for "G0" style coil – 02-166796.
For other voltages and connectors contact your Eaton representative.

Std. Voltages	Amperes*
12 DC	2.42
24 DC	1.21
36 DC	0.81
24 AC	1.34
115 AC	0.28
230 AC	0.14

*Nominal voltage 25°C (77°F).

Voltage Type B

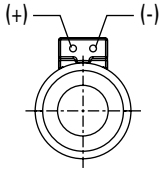

Where measurements are critical request certified drawings. We reserve the right to change specifications without notice.

EATON Powering Business Worldwide
Integrated Hydraulics An Eaton Brand

C-**-4

Aluminum housings
(Light duty)

Housing	Ports 1, 2, 3 & 4	Part Number	Code
C–10–4	3/8" BSPP SAE 6	02-179705 566161	(A)3B (A)6T
C–16–4	3/4" BSPP SAE 12	02-175468 566411	(A)6B (A)12T
C–20–4	1" BSPP SAE 16	02-175469 566412	(A)8B (A)16T

Housing (FDC*-**only)			
C–10–4	3/8" BSPP SAE 6	02-175467 566234	(A)3B (A)6T
C–16–4	3/4" BSPP SAE 12	02-175468 566200	(A)6B (A)12T

Notes

BSPP porting is designated by "B" in the model code SAE porting is designated by "T" in the model code.

Light duty aluminum housings are intended for applications up to 210 bar (3000 psi) with light to moderate duty cycles.

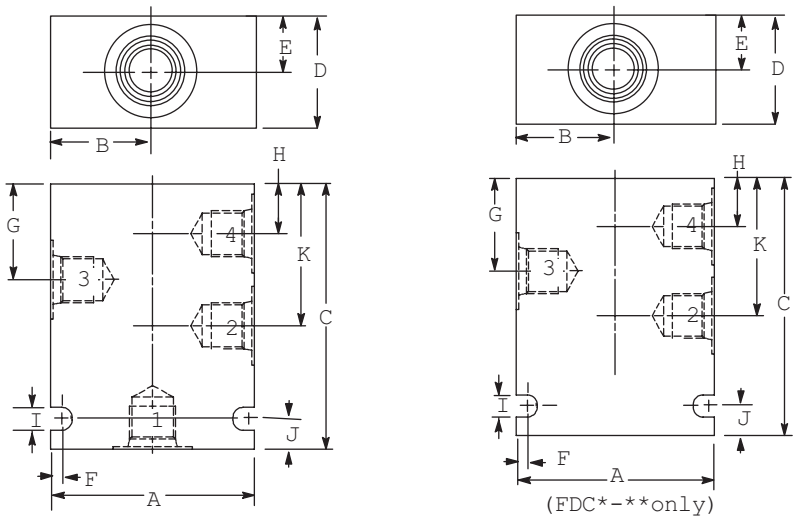

Dimensions	A	B	C	D	E	F	G	H	I	J	K	Mass
mm (inch)												kg (lb)
C-10-4	63,5 (2.50)	31,7 (1.25)	82,5 (3.25)	31,7 (1.25)	15,8 (0.62)	3,1 (0.12)	34,9 (1.37)	19,0 (0.75)	7,1 (0.28)	9,5 (0.37)	50,8 (2.00)	0,3 (0.72)
C-16-4	106,6 (4.00)	50,8 (2.00)	133,3 (5.25)	50,8 (2.00)	25,4 (1.00)	3,8 (0.15)	53,9 (2.12)	25,4 (1.00)	8,7 (0.34)	22,2 (0.87)	82,5 (3.25)	1,4 (3.24)
C-20-4	114,3 (4.50)	57,1 (2.25)	117,8 (7.00)	63,5 (2.50)	31,7 (1.25)	4,0 (0.16)	72,1 (2.84)	31,7 (1.25)	10,4 (0.41)	25,4 (1.00)	113,5 (4.47)	2,6 (5.76)

Note

For C-10-4 housings for VCB valves see page J-25.

J

TAB 6

This Page Intentionally Left Blank

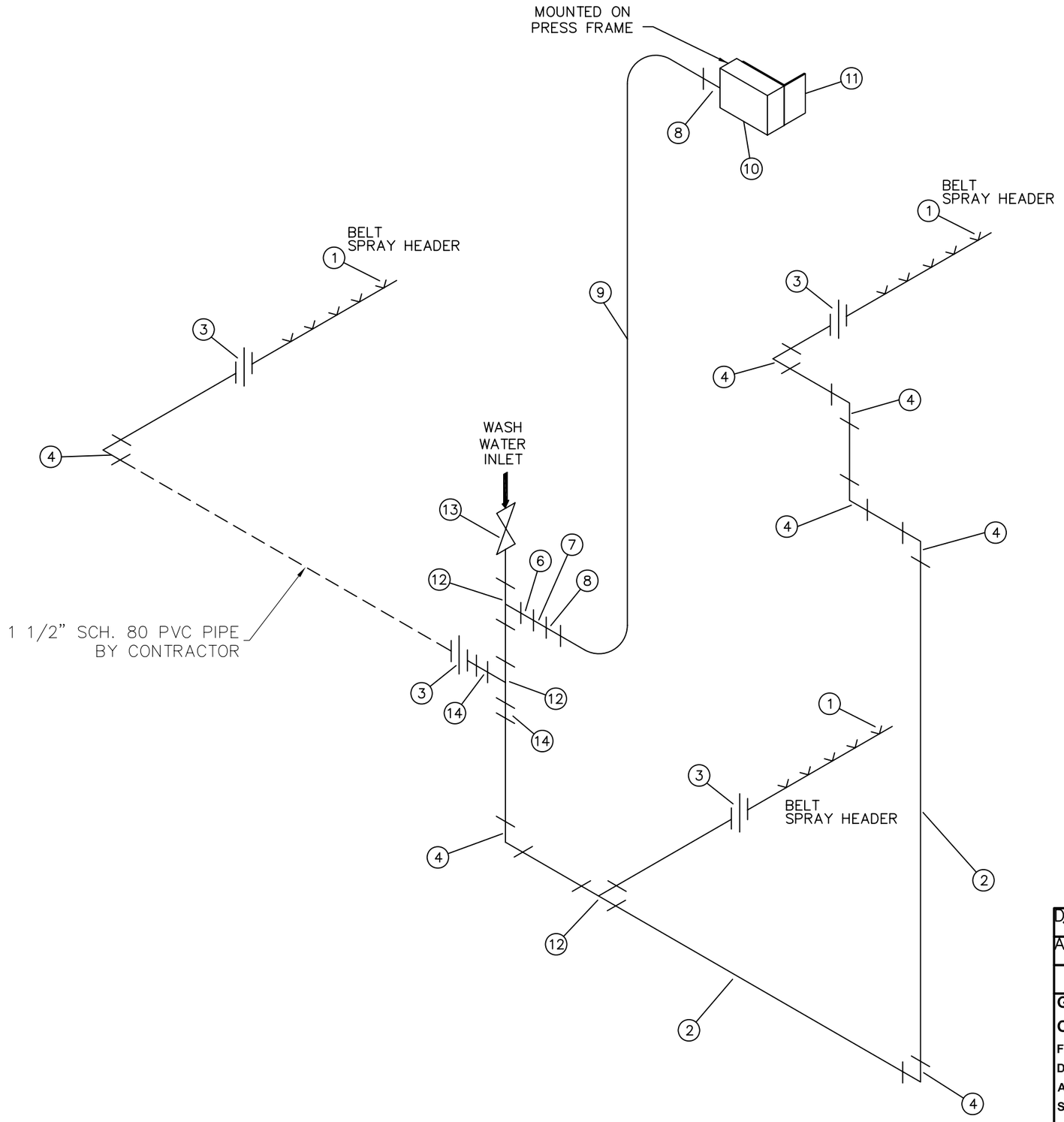

NOTE	ITEM	MATERIAL DESCRIPTION – REF. DRAWING, etc.	MAT'L	PART NUMBER REF NUMBER etc.	REQUIRED GR 01	GR 02	GR 03	GR 04	FIN WT 1 PC
	1	SPRAY HEADER	SSTL	SEE PROJECT LOG	3				
	2	1 1/2" PIPE, SCH. 80	PVC		1				
	3	1 1/2" UNION, SOCK, SCH. 80	PVC		4				
	4	1 1/2" ELBOW 90, SOCK, SCH. 80	PVC		7				
	5	1 1/2" TEE, SOCK, SCH. 80	PVC		1				
	6	2" SOC x 1/2" NPT RED BUSHING	PVC		1				
	7	1/2" NPT x 1/4" NPT RED BUSHING	BRASS		1				
	8	1/4" TUBE x 1/4" NPT 90° FITTING	BRASS		1				
	9	1/4" FLEXIBLE TUBING	NYLON		1				
	10	PRESSURE SWITCH			1				
	11	PRESSURE SWITCH BRACKET	304SS	RB800.3-B-110	1				
	12	2" TEE, SOCK. SCH. 80	PVC		2				
	13	2" SCH. 80 TRUE UNION BALL VALVE	PVC		1				
	14	2" SOC X 1 1/2" SOC RED BUSHING	PVC		2				
	15	2" PIPE, SCH. 80	PVC		1				

NOTES:

1) PIPING AND COMPONENTS PRE-ASSEMBLED AND MOUNTED TO THE MACHINE FRAME WILL BE SUPPLIED BY CHARTER MACHINE COMPANY.

2) UNLESS OTHERWISE NOTED, COMPONENTS ARE PVC.

DRAWN TMP	3/11/09
APPROVED	

G.E.C. TOLERANCES UNLESS OTHERWISE SPECIFIED
FRACTIONAL DIM ±1/64
DECIMAL DIM ±.005
ANGLE ± 1/2
SURFACE FINISH 125

CHARTER MACHINE COMPANY
55 WESTER AVE METUCHEN N.J. 08840

TITLE
3 BELT TOWER PRESS 00.93S
WASH WATER
ASSEMBLY

SIZE	DWG NO.	REV
B	3BTP00.93S-B-041	0

SCALE NONE SHEET 1 OF 1

This Page Left Blank Intentionally

New Shower Header Family…3 Ways Better

1. Brush Type Version with easy cleaning capability.

2. Exclusive self-locating disc-type shower nozzles eliminate alignment guesswork.

3. Multi-purpose flush-out valve for convenient hose connection. Not a welded housing.

Designed-in Versatility

Spraying Systems Co. has taken the conventional shower header and has incorporated sought-after design features that contribute to easier maintenance and better performance.

You can purchase just the basic brushless header. Later you can add a brush type cleaning assembly. Or, if you prefer, a motor-driven cleaning unit can be installed to automate your brush cleaning cycles.

With the brush type design, you simply rotate the interior brush assembly, scrubbing both the inside of the pipe and the nozzle orifices…while continuing to spray. Accumulated debris is removed through the flush-out valve, restoring full liquid flow and preventing contamination of the sprayed surface.

Quality Engineering

Spraying System's shower headers are constructed of types 304L or 316L stainless steel. Disc-type shower nozzles are precision machined to provide accurate spray angles and flow rates. Replacement of nozzles is quick and easy. Lock-ring holds nozzles securely in place.

Nozzle orifices protrude slightly into the pipe and are in line with the plane of the brush movement. This provides efficient cleaning because the bristles of the brush sweep along the full length of the orifice.

Staggered cleaning brush sections are installed at 120° intervals. Large flow passages between sections reduce pressure loss. The cleaning assembly is designed to prevent brush section interference of nozzle performance when the flush-out valve is in the operating position after cleaning cycles. The entire brush assembly is removable and is easy to replace.

Shower Options Provide Design Flexibility

Spraying Systems Co.'s headers are available in many different configurations to accommodate your specific needs.

Pipe diameter 1 ½" are available in lengths as required. The shower headers are designed to operate up to 1000 psi (70 bar). Disc-type shower nozzles are available in a wide variety of spray angles and flow rates. Nozzles may be spaced at any interval.

Elbows, flanges, hose adapters, and a variety of mounting options are available in many sizes…and may be specified for the inlet as well as outlet connection.

For more information concerning Spraying Systems' shower headers, contact Spraying Systems Co. directly or consult your local Spraying Systems Co. representative.

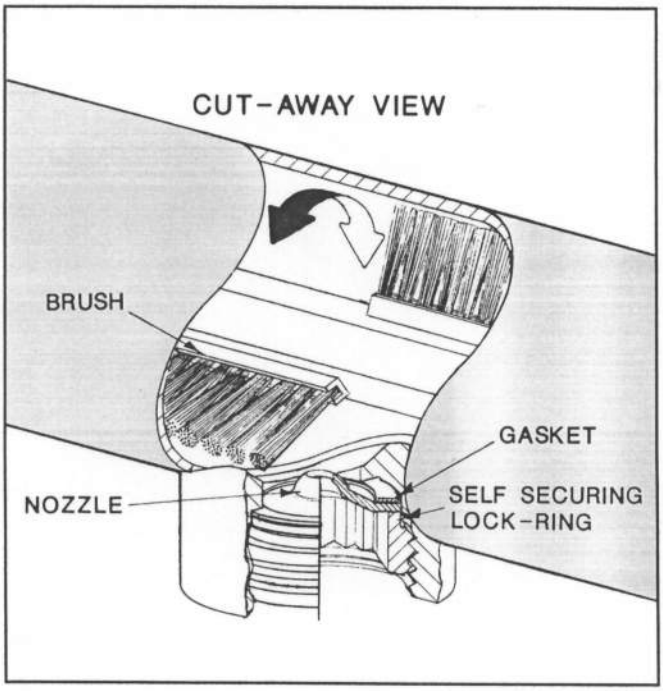

FIG 1 - Brush sections sweep the interior of the pipe and the nozzle orifice with each cleaning cycle.

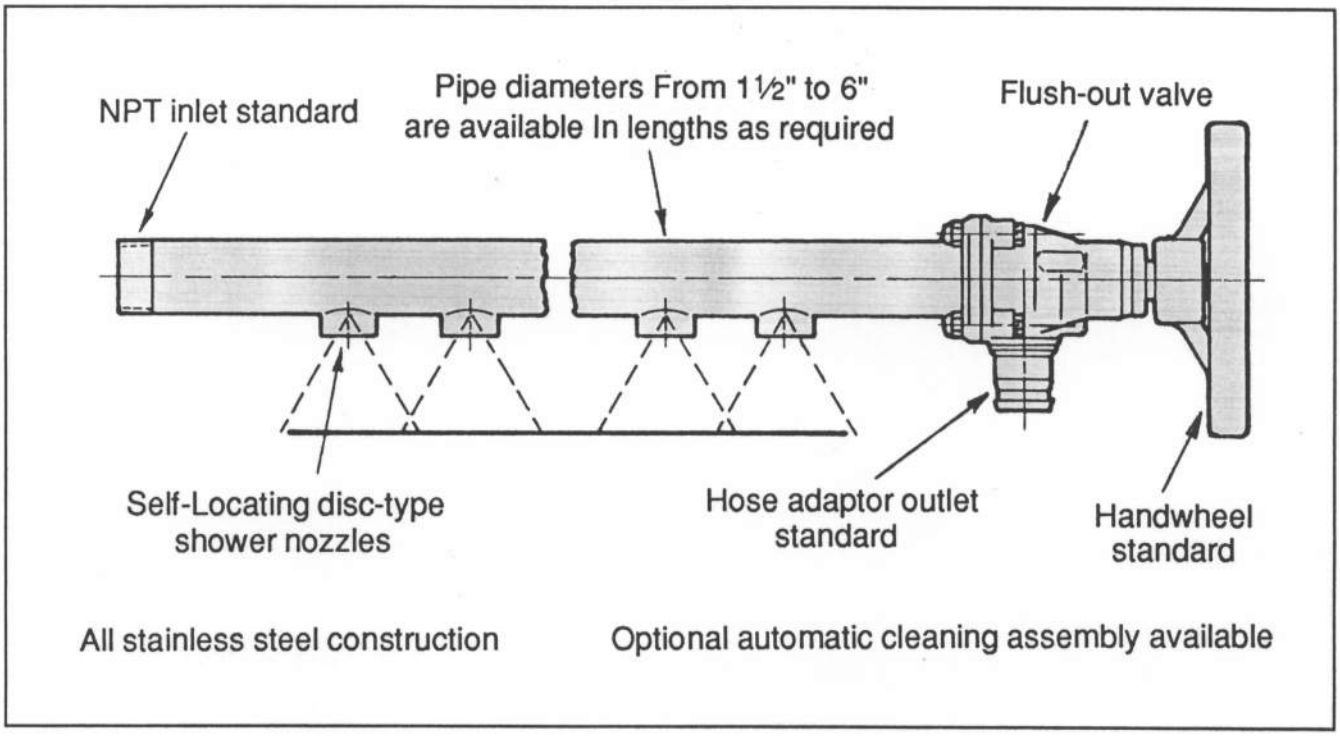

FIGURE 2

FLOW RATES per Nozzle in g.p.m. – l/min

Spray Angle at 60 PSI (4 bar)	Part #	ORIFICE DIAMETER		CAPACITY IN GALLONS PER MINUTE					CAPACITY IN LITERS PER MINUTE				
		INCHES	mm	20 PSI	40 PSI	100 PSI	250 PSI	800 PSI	1.5 bar	3 bar	7 bar	20 bar	55 bar
60°	6012	0.099	2.5	0.88	1.2	2.0	3.1	5.6	3.5	4.9	7.5	12.6	21

Minimum Water Pressure – 20 psig (1.5 bar)

$$\text{GPM REQ} = \sqrt{\frac{\text{PSI (REQ)}}{\text{PSI (GIVEN)}}} \times \text{GPM Given}$$

SPRAY SHOWER MILLING / FILTER BELT - DIMENSIONS

Belt Press Size	Part #	Document #	DIMENSIONS (from Figure 3)							# of Nozzle	Total Flow Rate (Gpm)	Header Angle H (Fig. 4)
			A (in)	B (in)	C (in)	D (in)	E (in)	F (in)	G (in)			
2.2 Meter	025-191-1487	P27242-25	112	104.5	82.63	4.6	9.125	87.25	11.4	19	34.4	180

SPRAY SHOWER GRAVITY BELT - DIMENSIONS

Belt Press Size	Part #	Document #	DIMENSIONS (from Figure 3)							# of Nozzle	Total Flow Rate (Gpm)	Header Angle H (Fig. 4)
			A (in)	B (in)	C (in)	D (in)	E (in)	F (in)	G (in)			
2.2 Meter	025-191-1487	P27242-25	112	104.5	82.63	4.6	9.125	87.25	11.4	19	34.4	180

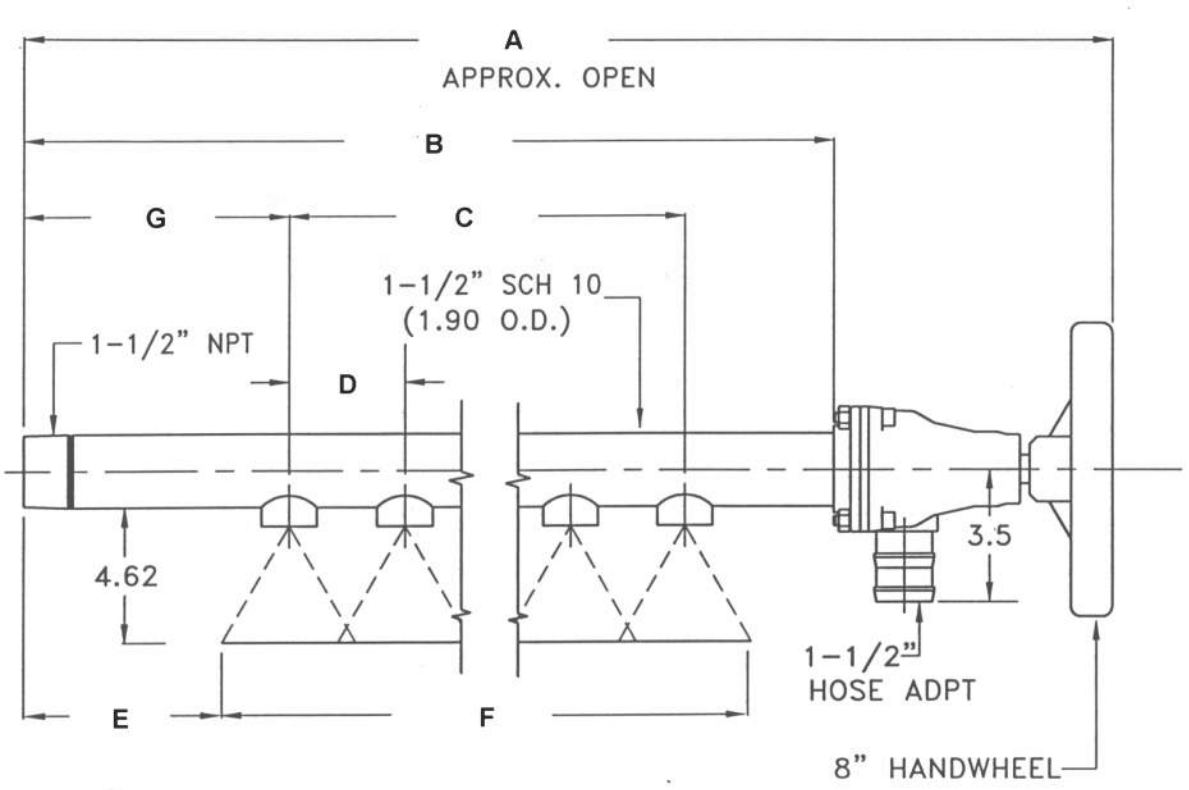

Operating Pressure - 85 Psig

Orifice Size - 0.099”

Spray Angle - 60°

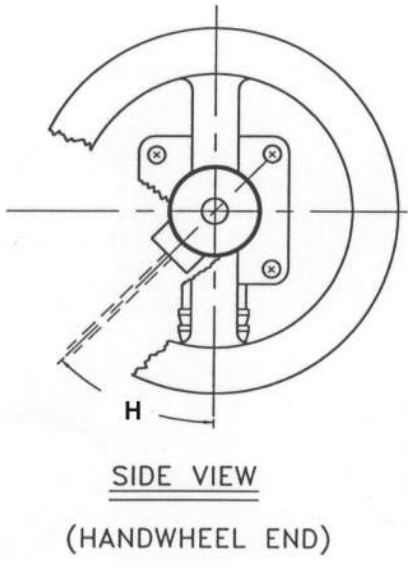

FIGURE3

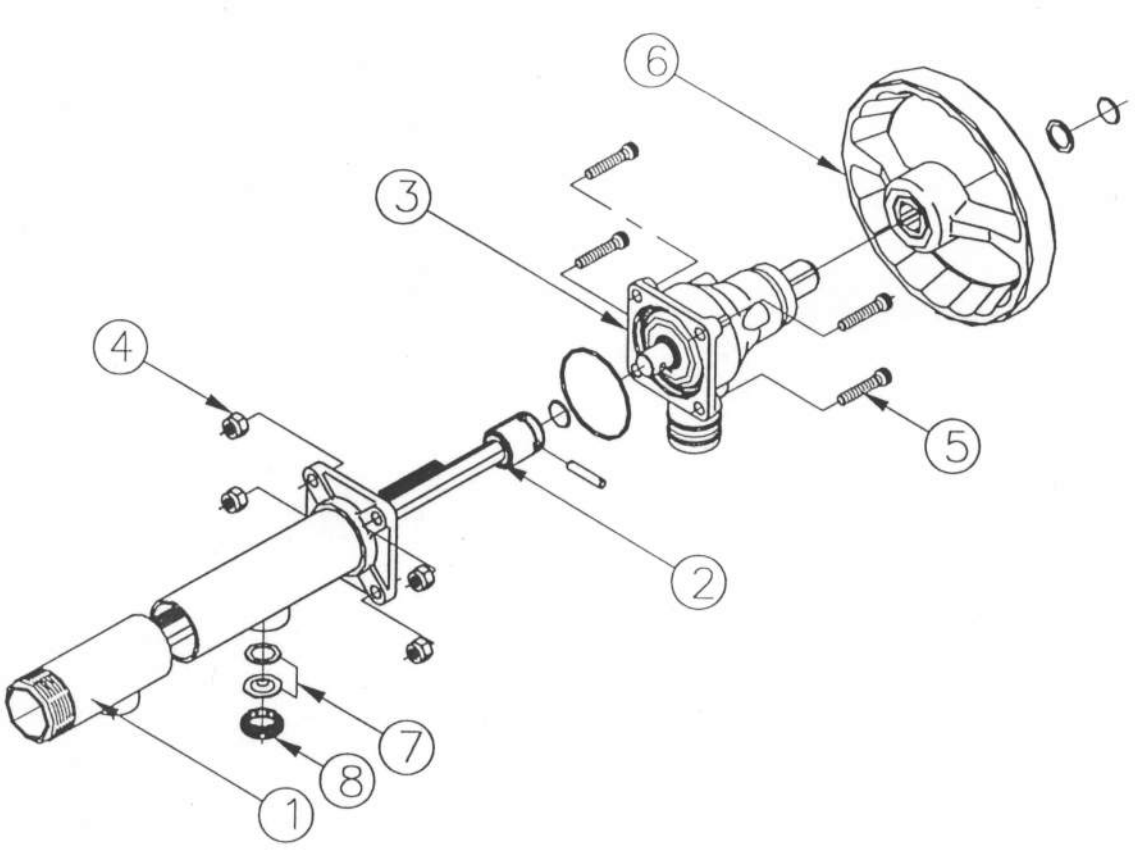

Item	Qty	2.2m Part #	Description
1	1		1 ½" Pipe Assembly
2	1	27449-RB-16-316L	Brush Assy 316L SS
3	1	CP27093-01-CB	Valve Housing Assy 316 SS
4	4	CP27095-13-CB	Self Locking Nut 316 SS
5	4	CP29805-209-CB	Cap Screw 316 SS
6	1	CP27099-01-AL	Handwheel Assy Aluminum
7	*	27149-6012-316L	Nozzle w/ Gasket
8	*	CP27044-001-316SS	LockRing 316 SS

* Refer to Nozzle Quantities in Previous Tables

Transamerica Delaval

Barksdale Controls Division•3211 Fruitland Ave. •PO Box 58843•Los Angeles, CA 90058•213-589-6181

ECON-O-TROL Dia-Seal Piston Models
Water Tight Housing (NEMA 4)

Pressure Switches
E1H Single Setting

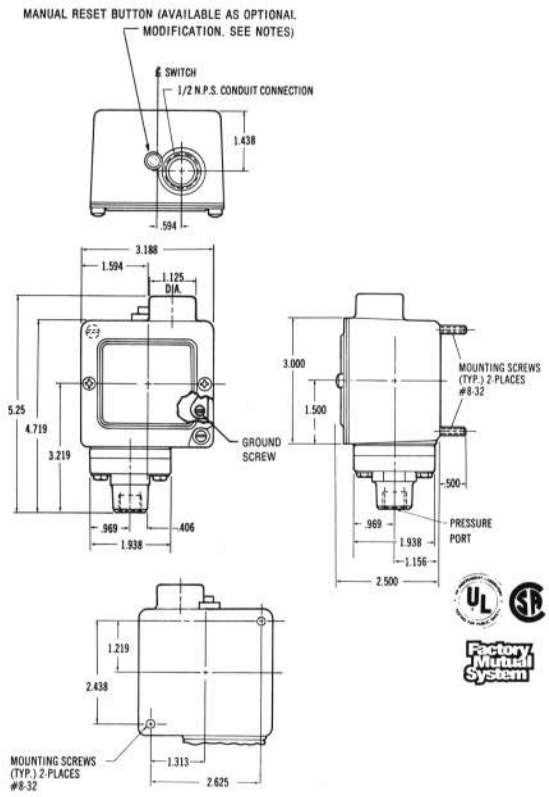

OPERATING CHARACTERISTICS • ORDERING DATA

PRESSURE SWITCHES – All values given in PSI (Gauge)

Proof (Test) Press	Adjustable Range				Approx. Actuation Value (Differential)	Catalog # ¼" NPT Internal
	Decreasing		Increasing			
	Min.	Max.	Min.	Max.		
1000	10.0	230	11.0	250	1.0 – 20.0	E1H-H250

DETAIL DATA

ELECTRICAL CHARACTERISTICS (Pressure Switches): All models incorporate Underwriter's Laboratories, Inc. listed single pole double throw snap-action switching elements. Electrical rating (continuous inductive) 10 amps 125 or 250 volts AC, 3 amps 480 volts AC. Automatically reset by snap-action of switch.

ELECTRICAL CONNECTION (Pressure Switches): Through ½" NPS Conduit Connection to screw terminals on switch. May be wired Normally Open or Normally Closed.

PRESSURE CONNECTION: ¼" NPT internal thread, standard. 1/8" NPT internal and ½" NPT external thread, P6 option.

ADJUSTMENT INSTRUCTIONS: Turn self locking adjustment nut clockwise to raise and counterclockwise to lower the actuation point. All dials are calibrated for increasing settings.

dia-seal piston

DIA-SEAL PISTON MODELS: This unique design combines diaphragm accuracy with piston switch long life and high proof pressure tolerance.

Econ-O-Trol pressure and vacuum switches (vacuum to 500 p.s.i. settings, 1,000 p.s.i. proof). A dia-seal piston direct acting on a snap-action switch.

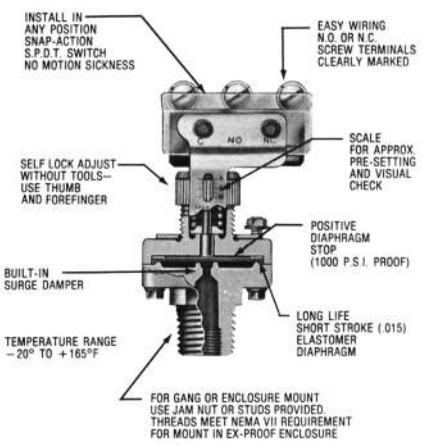

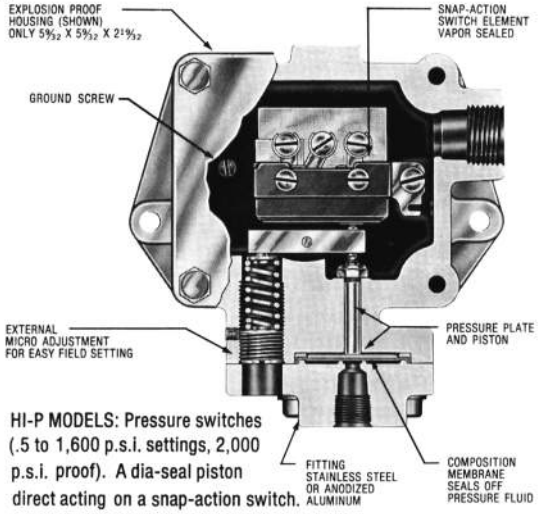

HI-P MODELS: Pressure switches (.5 to 1,600 p.s.i. settings, 2,000 p.s.i. proof). A dia-seal piston direct acting on a snap-action switch.

GENERAL OPERATING ENGINEERING AND SERVICE DATA

TEMPERATURE

Maximum recommended range of pressure media and ambient temperature.

Pressure Switch Type	Temperature Range
Bourdon Tube and Diaphragm	-65°F to 165°F
Dia Seal	-20°F to 165°F
Sealed Piston Standard “O”-ring	-40°F to 165°F

For other requirements consult factory. For best results ambient temperature should be kept as constant as possible.

LIFE EXPECTANCY

The same factors governing the life of gauges and other instruments, using bourdon tube or diaphragm sensing elements, apply to pressure switches.

If with each operating cycle the sensing element must flex over the entire operating range for which it was designed, or whether it flexes only over a small portion of that range considerably affects the life expectancy of the unit.

The second factor to speed up metal fatigue of the tube or diaphragm is the speed with which it must repeat the flexing cycles. At normal flexing rate (less that 25 cycles per minute) you may therefore find the following variance in the same type of sensing element:

At full range flexing up to 1,000,000 cycles depending on thickness of diaphragm. The thinner the material, the longer the life.

At 50% of its flexing range up to 3,500,000 cycles (see above).

At 10 to 20% of its flexing range up to 5,000,000 cycles (see above).

TAB 7

This Page Intentionally Left Blank

USED FOR:
BELT BREAK / BELT OVER-TRAVEL

OMRON

General - Purpose Limit Switch	D4A-N

Heavy - Duty Switch Features Plug-In Construction

- Oil-tight, watertight construction meets NEMA 4X
- Convenient front mounting, easy installation and maintenance
- Wide temperature range: -40°C to 100°C (-40°F to 212°F)
- Side rotary switches accept a wide selection of levers
- Increased mechanical durability

Ordering Information

SIDE ROTARY SWITCHES

Descripton	SPDT double break No indicator	Part Number
High precision	D4A-1102N	035-225-0175

Adjustable rod lever

Lever radius	Material	Diameter	Catalog #	Part #
150 mm (5.91) L	Stainless Steel	3 mm (0.12 in)	D4A-D00	035-221-0176

Specifications

CONTACT CONFIGURATION

SPDT Double Break with Same Polarity

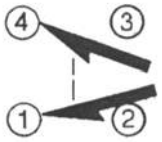

Construction

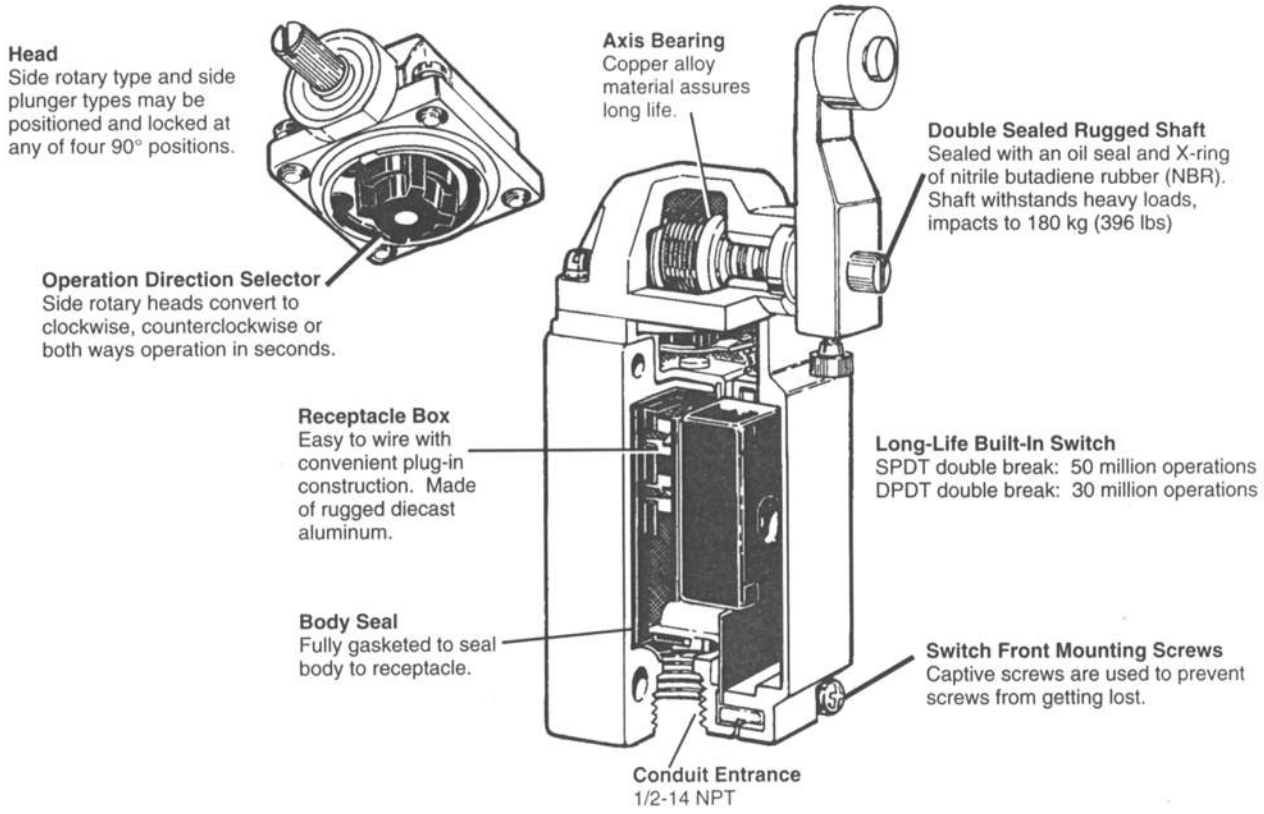

TERMINAL ARRANGEMENT

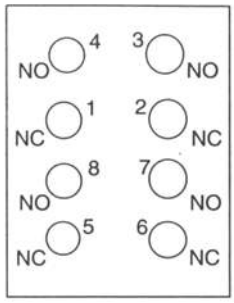

ELECTRICAL SPECIFICATIONS

NEMA A600 Rating (UL/CSA)

Circuit	Rated Voltage	Amperes		Continuous carrying current	Voltamperes	
		Make	Break		Make	Break
SPDT double break	120 VAC	60	6	10	7200	720

Contact Ratings – 25 mΩ maximum (initial)

MATERIAL CONTROL, INC.

One Smoke Tree Plaza, Suite 115, North Aurora, Illinois 60542
Telephone (312) 892-9767 - 892-4274

For emergency or normal shutdown of conveyor systems, elevator equipment, bulk handling systems, cranes, production and assembly lines, or any other equipment which may require immediate, positive shutdown.

Switch

Part #	Catalog #	SP/ST Switch
035-225-0247	PCL2S	Single end left – 2 sw.
035-225-0347	PCR2S	Single end right – 2 sw.

Installation Instructions

1. Switch should be mounted on a flat surface by using two or more of the four 13/32" dia. mounting holes provided. One fastener in each end of the mounting bar will be sufficient.
2. Distances between switches should not exceed 200 ft. We suggest you do not use more than 100 ft. of cable per switch end. This suggestion is for maximum safety purposes. Too much cable can result in a "long pull" situation due to slackness in the cable.
3. Recommended spacing of cable support eye bolts is 10 ft. Care should be taken to keep the cable from becoming too slack. Care must also be taken that the cable is not so "tight" as to be pulling out the cable end connection clevis.
4. Wiring should be through the motor control circuit.
5. After supply power, actuate by pulling cable to check switch. This will insure that there is not too much slack in the cable and that there are no obstructions to the cable or flag arm.

Typical Wiring

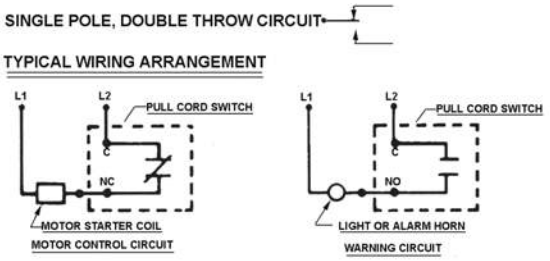

MODEL PC Dimensions

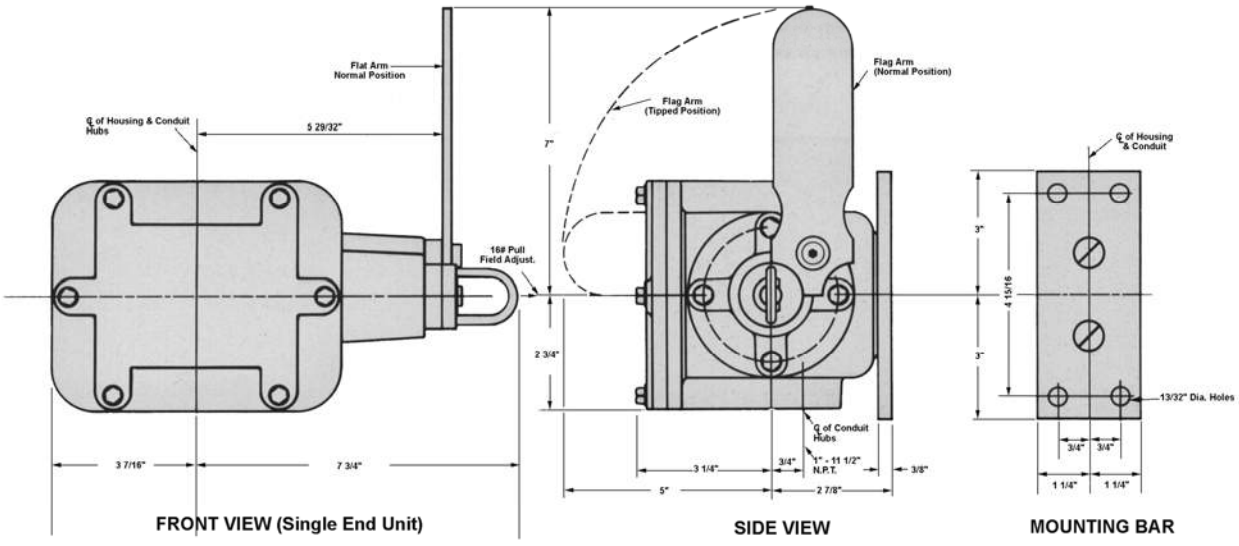

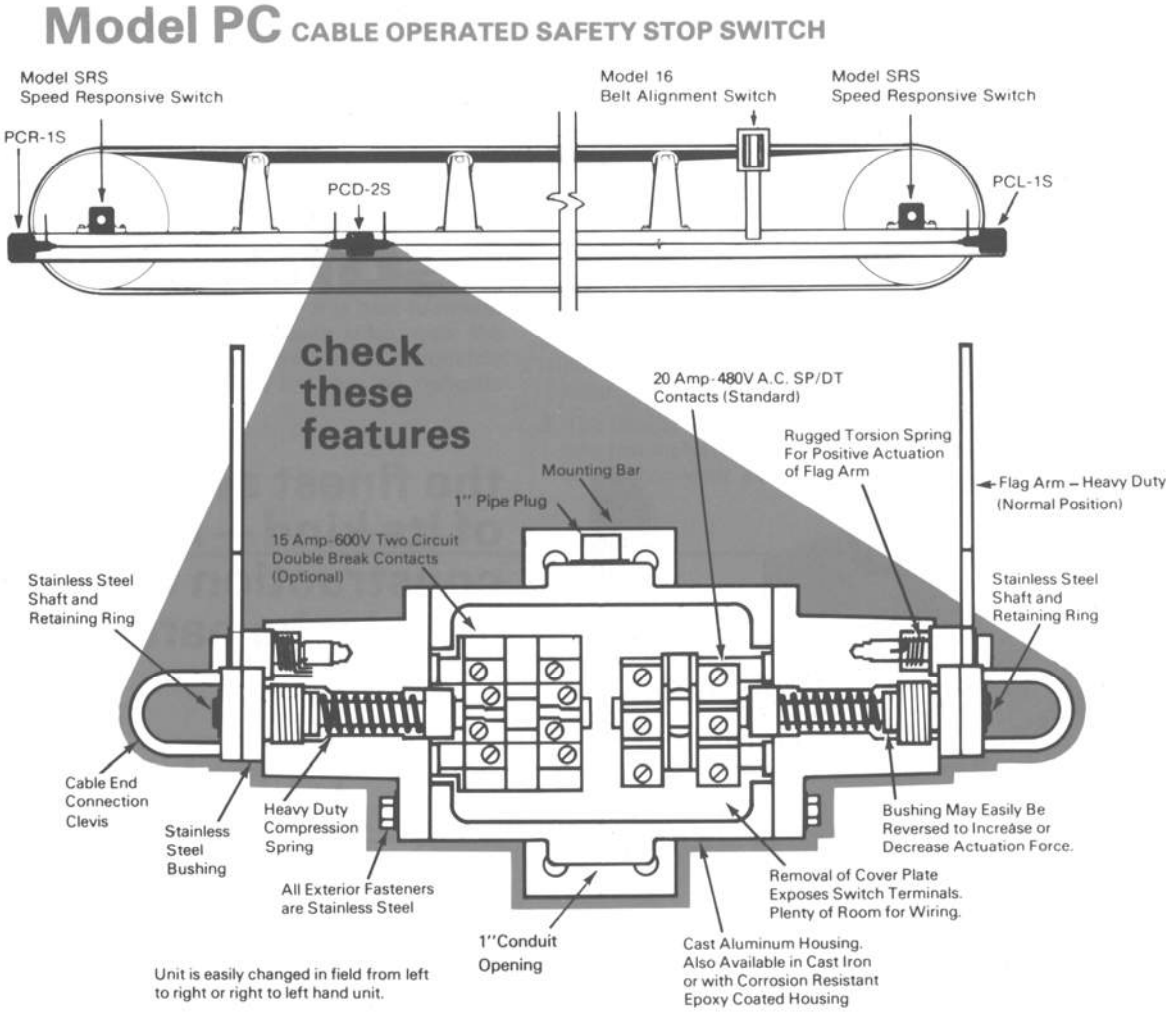

OPERATIONS

A cable is connected from a fixed point to the cable end connecting clevis on the end of the unit. A pull on the cable (16 lb. force standard –25 lb. optional) with a movement of less than ½" will actuate the switch and trip the flag arm down, into the walkway, and lock the switch (and flag arm) in the actuated position. Unit is reset by returning the flag arm to the normal position.

TECHNICAL INFORMATION

Enclosure sealed for outside applications.
Standard unit meets NEMA 1, 3, 4X, and 12 requirements.
Conduit opening – 1 inch hole.

Housing – Cast aluminum (Std.)
Flag arm – Steel with red epoxy paint coating

STANDARD SWITCH

Two SP.DT switch per side.
20 amps, 125, 250, or 480 vac;
10 amps, 125 vac "L" (tungsten lamp load);
1 hp, 125 vac; ¼ amp, 250 vdc
Use two SP/DT switches per end when separate light or audible alarm is required.

Olympic Wire and Cable
7 Madison Road • Fairfield, NJ 07004
973.227.7996 800.526.2269 • Fax: 973.227.1606
email: sales@olympicwire.com

Olympic P/N 144V, VFD and Motor Supply Cable

VFD and Motor Supply Cable

UL TC-ER, WTTC, CSA, CE, Direct Burial, Sunlight Resistant

Tinned copper, PVC/Nylon insulated, Foil and Tinned Copper Braid Shielded, Black PVC Jacket.

SPECIFICATIONS

Conductor Size	14 AWG
No. of Conductors	4
Stranding	41 Tinned Copper
Insulation	PVC / Nylon
Jacket	PVC, Black
Nom. O.D.	0.417 in
UL Style	1277, TC-ER, WTTC
CSA Flame Test	C(UL) TC, FT4
CSA Type	CIC
Capacitance	21.6 pF/ft
Temperature	-40ºC to 90ºC
Voltage	1000 Flexible VFD Servo 1000 WTTC 600 UL TC
Approval	Flexible VFD Servo MSHA NEC: Class 1, Div. 2 Oil Res II

Color Code	Black with White Numbers &One Green/Yellow

Olympic Wire and Cable
7 Madison Road • Fairfield, NJ 07004
973.227.7996 800.526.2269 • Fax: 973.227.1606
email: sales@olympicwire.com

Olympic P/N 8302S, 16 AWG, Stranded 7 X .0192, Tray Cable

16 AWG, Stranded 7 X .0192 Cable

UL SUBJECT 1277
OSHA ACCEPTABLE
IEEE-383

UL FLAME TEST IEEE 1202, 1581, 1685

CSA FLAME TEST FT4

Stranded bare Copper conductors, color coded PVC insulation with overall Nylon jacket, sizes 18 and 16 AWG are rated TFFN, sizes 14, 12 and 10 AWG are rated VW-1 THHN/THWN, conductors are twisted with fillers as needed, Polyester binder tape, stranded tinned Copper drain wire, Alum-Mylar shield (100% coverage), black PVC jacket.

Application: For use in Class 1, Division 2 hazardous locations; for installation in trays, wireways, ducts, conduit and aerially when properly supported by a messenger; approved for direct burial, wet or dry locations and outdoors in cable trays where a sunlight and oil resistant rating is required

SPECIFICATIONS

Conductor Size	16 AWG
Stranding	7/.0192 Bare Copper
No. of Conductors	3
Insulation	PVC/Nylon
Insulation Thickness	0.020 in
Shielding	Aluminum Mylar with Stranded Tinned Copper Drain Wire
Jacket	PVC, Black
Jacket Thickness	0.045 in
Nom. O.D.	0.306 in
UL Style	TC-ER
Color Code	Black Blue Red
Voltage	600 V
Dry Temperature	-25 to 90 ºC

Wet Temperature	75 ºC
RoHS Compliant	 RoHS Compliant

Olympic Wire and Cable
7 Madison Road • Fairfield, NJ 07004
973.227.7996 800.526.2269 • Fax: 973.227.1606
email: sales@olympicwire.com

Olympic P/N 8305S, 16 AWG, Stranded 7 X .0192, Tray Cable

16 AWG, Stranded 7 X .0192 Cable

UL SUBJECT 1277
OSHA ACCEPTABLE
IEEE-383

UL FLAME TEST IEEE 1202, 1581, 1685

CSA FLAME TEST FT4

Stranded bare Copper conductors, color coded PVC insulation with overall Nylon jacket, sizes 18 and 16 AWG are rated TFFN, sizes 14, 12 and 10 AWG are rated VW-1 THHN/THWN, conductors are twisted with fillers as needed, Polyester binder tape, stranded tinned Copper drain wire, Alum-Mylar shield (100% coverage), black PVC jacket.

Application: For use in Class 1, Division 2 hazardous locations; for installation in trays, wireways, ducts, conduit and aerially when properly supported by a messenger; approved for direct burial, wet or dry locations and outdoors in cable trays where a sunlight and oil resistant rating is required

SPECIFICATIONS

Conductor Size	16 AWG
Stranding	7/.0192 Bare Copper
No. of Conductors	6
Insulation	PVC/Nylon
Insulation Thickness	0.020 in
Shielding	Aluminum Mylar with Stranded Tinned Copper Drain Wire
Jacket	PVC, Black
Jacket Thickness	0.045 in
Nom. O.D.	0.370 in
UL Style	TC-ER
Color Code	Black Blue Brown Orange Red Yellow
Voltage	600 V
Dry Temperature	-25 to 90 ºC

Wet Temperature	75 ºC
RoHS Compliant	 RoHS Compliant

VFD Combo DS

Type TC-ER and MTW

Variable frequency drive - VFD cable with one or two shielded pairs

Marking for VFD Combo DS 08530444: SAB BRÖCKSKES · D-VIERSEN · VFD Combo DS 4 AWG/4c + 16 AWG/2pr 08530444
THHN + TFFN (UL) Type TC-ER 90°C 600V, Oil I, Sunlight Resistant, Direct Burial, FT4 (UL) WTTC 90°C 1000V (UL) MTW 600V flexing AWM Style 21179
1000V c(UL) Type CIC SHIELDED 4 AWG/4c + 16 AWG/2pr 90°C dry 600V FT1, FT2, FT4 CSA AWM I/II A/B 90°C 1000V FT1 FT2 CE

VFD Combo DS is a flexible shielded motor supply cable designed for automated servo systems. VFD Combo DS comes with one or two shielded pairs for use with a braking mechanism or temperature sensor. It is also a machine tool cable for use as specified in the National Electrical Code (NFPA 70) and in the National Fire Protection Association Electrical Standard for Industrial Machinery (NFPA 79). This cable can be used without conduit (exposed runs). Its unique flame retardant jacket makes the VFD Combo DS rated for 600V suitable for tray cable application and also as Control and Instrumentation Cable, UL AWM recognized and CSA approved for 1000 Volt. The VFD Combo DS has an outer PVC jacket and both a foil and a braid shield which helps with problems related to voltage spikes, harmonics, and power distortions frequently associated with variable frequency drives. The VFD Combo DS can be used to connect alternating current variable frequency drives to alternating current variable frequency motors and is recommended to make installations less cumbersome. This motor supply cable is also suitable for installation in wet or dry locations and is UV resistant. The VFD Combo DS can be used in indoor or outdoor applications and is rated for direct burial. The combination of the braid and foil shield makes the cable 100% shielded from excessive interference. VFD Combo DS is permitted to be used in hazardous (classified) locations Class I, Division 2 per NEC Article 501.4 (B), UL Type TC is in acc. to UL standard 1277 and NEC Article 336 (392, 501). Wind turbine power and control cable is intended to be installed in cable trays or raceways within a wind turbine generator. MTW listed cables can be used in NFPA 79 Machine areas.

Construction:

Conductor:	tinned copper strands acc. to DIN VDE 0295 class 5 + IEC 60228 class 5 + HD 383 class 5 from 18 AWG - 12 AWG, from 10 AWG - 2 AWG class k in acc. to ASTM B 172
Insulation:	special formulated PVC/Nylon
Color code:	black conductors with consecutive white numbers and a green-yellow earth wire pairs: black conductors with white numbers 5, 6, 7, 8
Stranding:	signal conductors in pairs
Screen:	pairwise with alu foil, tinned copper drain wire AWG 26 and braided with tinned copper wires
Wrapping:	pairwise with PETP foil
Stranding:	screened signal pair(s) and power conductors in layers
Wrapping:	non-woven tape
Screen:	double shield, alu foil and tinned copper braiding
Jacket material:	special sunlight and oil resistant PVC

Technical data:

Voltage:	**(UL) / c(UL):** 600 V **UL-AWM/CSA-AWM:** 1000 V **(UL) WTTC:** 1000 V
Testing voltage:	conductor/conductor 7500 V conductor/screen 3000 V
Min. bending radius:	12 x O.D.
Temperature:	**UL-AWM:** up to +105°C; **(UL) / c(UL) / CSA-AWM:** up to +90°C
static:	-25°C
Burning characteristics:	(UL) / c(UL) FT4, c(UL) / CSA-AWM FT1, FT2
Oil resistance:	yes
Sunlight resistance:	yes
Exposed Runs:	yes
Direct Burial:	yes
Machinery Area:	yes
Absence of harmful substances:	acc. to RoHS directive of the European Union see page O/29

item no.	dimensions	nominal outer-ø inch	nominal outer-ø mm	cable weight ≈ lbs/mft
► 08531614	16 AWG/4c + 18 AWG/1pr	0.469	11.9	140
► 08531604	16 AWG/4c + 14 AWG/1pr	0.516	13.1	174
► 08531464	14 AWG/4c + 18 AWG/2pr	0.693	17.6	262
► 08531414	14 AWG/4c + 18 AWG/1pr	0.504	12.8	170
► 08531404	14 AWG/4c + 14 AWG/1pr	0.555	14.1	207
► 08531264	12 AWG/4c + 18 AWG/2pr	0.724	18.4	300
► 08531214	12 AWG/4c + 18 AWG/1pr	0.563	14.3	224
► 08531204	12 AWG/4c + 14 AWG/1pr	0.610	15.5	269
► 08531004	10 AWG/4c + 14 AWG/1pr	0.689	17.5	344
► 08530864	8 AWG/4c + 18 AWG/2pr	0.937	23.8	541
► 08530804	8 AWG/4c + 14 AWG/1pr	0.878	22.3	520
► 08530644	6 AWG/4c + 16 AWG/2pr	1.043	26.5	733
► 08530604	6 AWG/4c + 14 AWG/1pr	1.024	26.0	705
► 08530444	4 AWG/4c + 16 AWG/2pr	1.217	30.9	1015
► 08530404	4 AWG/4c + 14 AWG/1pr	1.157	29.4	982

Other dimensions and colors are possible on request.

Outstanding features:

- **Interconnection of variable frequency drive control device to variable frequency motors**
- **NFPA 79 for Industrial Machinery**
- **Shielded pairs for brake or temperature sensor**
- **WTTC: UL Subject 2277**
- **TC: UL Standard 1277**
- **(UL)/(cUL) listed**

CG 100 N SERIES PLASTIC CABLE GLANDS

NPT thread

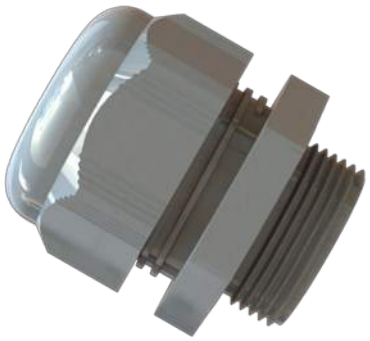

Technical Data:	
Material	Polyamide 6
Seal	Chloroprene (CR)
Color	RAL 7001 (Gray)
	RAL 9005 (Black)
Protection Class	IP 68 - 5 Bar
Temperature Range	-20°C to +100°C permanent
	-30°C to +150°C intermittent
Flammabilty	V2 (According to UL 94)
Approvals	UR, UL, CSA

Liquid tight seal, fast & easy installation, wide clamping range, multi-purpose applications, easy handling.

Part Number		Thread Size	Clamping Range Ø (min-max)		Thread Diameter (TD)		Wrenching Flats (SW)		Thread Length	Height (H)	UL[1]
Gray	Black		inches	mm	inches	mm	inches	mm	inches	inches	
NPT											
PNG-3/8	PNB-3/8	NPT 3/8	.197 - .394	5.0 - 10.0	0.653	17.0	0.866	22.0	0.590	1.102	UR
PNG-1/2	PNB-1/2	NPT 1/2	.236 - .472	6.0 - 12.0	0.809	21.0	0.945	24.0	0.590	1.141	UL
PNG-1/2C	PNB-1/2C	NPT 1/2	.394 - .551	10.0 - 14.0	0.809	21.0	1.063	27.0	0.590	1.220	UL
PNG-3/4	PNB-3/4	NPT 3/4	.512 - .709	13.0 - 18.0	1.020	26.0	1.299	33.0	0.590	1.377	UL
PNG-1	PNB-1	NPT 1	.709 - .984	18.0 - 25.0	1.275	32.0	1.654	42.0	0.709	1.574	UL
NPT with Reducing Bushings†											
PNG-3/8R	PNB-3/8R	NPT 3/8	.118 - .276	3.0 - 7.0	0.653	17.0	0.866	22.0	0.590	1.102	-
PNG-1/2R	PNB-1/2R	NPT 1/2	.197 - .354	5.0 - 9.0	0.809	21.0	0.945	24.0	0.590	1.141	-
PNG-1/2RC	PNB-1/2RC	NPT 1/2	.276 - .472	7.0 - 12.0	0.809	21.0	1.063	27.0	0.590	1.220	-
PNG-3/4R	PNB-3/4R	NPT 3/4	.354 - .630	9.0 - 16.0	1.020	26.0	1.299	33.0	0.590	1.377	-
PNG-1R	PNB-1R	NPT 1	.472 - .787	12.0 - 20.0	1.275	32.0	1.654	42.0	0.709	1.574	-

NPT PLASTIC LOCK NUTS

Part Number		Thread Size	Height		Diameter		Wrenching Flats		UL
Gray	Black		inches	mm	inches	mm	inches	mm	
NPT									
LNG-3/8	LNB-3/8	NPT 3/8	0.197	5.0	0.984	25.0	0.866	22.0	-
LNG-1/2	LNB-1/2	NPT 1/2	0.197	5.0	1.201	30.5	1.064	27.0	-
LNG-3/4	LNB-3/4	NPT 3/4	0.197	5.0	1.476	37.5	1.299	33.0	-
LNG-1	LNB-1	NPT 1	0.236	6.0	1.831	46.5	1.850	47.0	-

[1]Additional UL approvals in process

† Not currently CSA approved

Saginaw Control & Engineering
95 Midland Road
Saginaw, MI 48638
Phone: (989)799-6871
Fax: (989)799-4524
http://www.saginawcontrol.com

Part Details - SCE-1412ELJSS6

Part Number: SCE-1412ELJSS6
Description: S.S. ELJ Enclosure
Height: 14.00 inches
Width: 12.00 inches
Depth: 6.00 inches
Page Number: 211
List Price: $453.85
Panel: SCE-14P12J
Product Code: S7
Est. Shipweight: 13.00 lbs.
NEMA Rating: ~~12~~, 4, 4X

CAD Package (STP, PDF, DWG)

Having trouble downloading drawings? Click Here for help.

Construction -

- 0.063 Stainless Steel Type 316
- Seams continuously welded and ground smooth.
- Flange trough collar around all sides of door opening
- Oil-resistant gasket
- Standoffs provided for mounting optional panels
- Removable hinges.
- Doors open 180 degrees
- Black mini quarter turn latches
- Latches are opened or closed with a screwdriver
- Sealing washers and hole plugs included
- Ground stud on door and body
- Optional mounting feet available

Application -
Designed to house electrical controls, instruments and components in areas which may be regularly hosed down or are in very wet or oily conditions. Provides protection from dust, dirt, oil, and water.

Finish -
#4 brushed finish on all exterior surfaces. Optional subpanels are powder coated white.

Industry Standards -
NEMA Type 4, 4X, 12 & 12
UL Listed Type 4, 4X, & 12
CSA Type 4, 4X & 12
IEC 60529 IP 66

Similar Part Numbers -

- SCE-10086ELJSS6
- SCE-1008ELJSS6
- SCE-12108ELJSS6
- SCE-1210ELJSS6
- SCE-1212ELJSS6
- SCE-14128ELJSS6
- SCE-16148ELJSS6
- SCE-1614ELJSS6
- SCE-604ELJSS6
- SCE-606ELJSS6
- SCE-8066ELJSS6
- SCE-806ELJSS6

Copyright © 2000 - 2009 - Saginaw Control & Engineering

This Page Intentionally Left Blank

TAB 8

This Page Intentionally Left Blank

UNICASE™ Construction

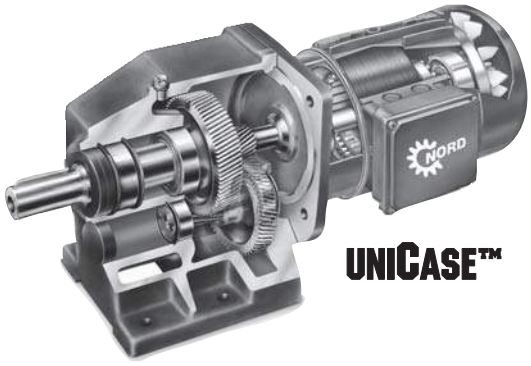

UNICASE™ Construction refers to an overall design concept that allows proper alignment of the gear meshes and the bearings. All of the main drive train components are contained in a one-piece housing. All bearing bores, pilots, and registers of the housing are machined in one set-up. First, the foot or inspection cover is machined. The housing is then positioned from this first cut to machine all remaining features. Specially designed, dedicated fixtures are used to hold the castings rigidly and accurately for machining. This assures positive bearing and gear alignment.

Covers or openings are minimized, reducing the number of potential leak paths, and subsequently the probability of a leak occurring. A standard Failure Effects and Modes Analysis (FEMA) shows that this is the best design. Although this type of design tends to make assembly more difficult, it results in a superior product. Fortunately, NORD has specially designed tools to assure proper, efficient assembly.

All covers and openings are un-stressed access panels, or are positioned with a large pilot diameter. An un-stressed access panel is the best, because there are no forces trying to break the seal between the components.

In no case is a bearing bore split even if it is internal to the reducer. Designs with split bearing bores require bolts to hold the bore together. It is common for bearings to fail due the outer face being improperly supported, causing a stress riser at seams in bearing bores.

AUTOVENT ™ Breather

When a gear reducer is operated intermittently, it warms up while operating and cools down after being shut off. The oil expands when it heats up and compresses the air inside the housing, resulting in a positive pressure that could cause the oil seals to rupture if left unregulated. Conversely, when the oil is cooling, it will reduce in volume, and outside air, and potentially humidity and dirt, will enter the reducer. A small concentration of water in mineral oil will cause foaming, will reduce the lubricating properties of the oil, and will promote a rapid degradation of the lubricant's chemistry. Internal components, such as bearings and gears, may quickly be damaged by a small quantity of these contaminants alone or in combination with caustic or corrosive fluids.

The Autovent™ operates like a check-valve to allow the reducer to dissipate internal pressure during warm-up, while preventing lubricant contamination during cooling. A spring presses a ball against a machined orifice until the heating of the oil and air inside the reducer exceeds 2 psi. Between 2 and 3 psi, the spring compresses and the ball is displaced, allowing pressure to escape. The internal pressure then drops below 2 psi, the spring elongates, and the ball returns to its initial position, sealing the unit. As the reducer continues to cool, the unit will temporarily develop a slight vacuum.

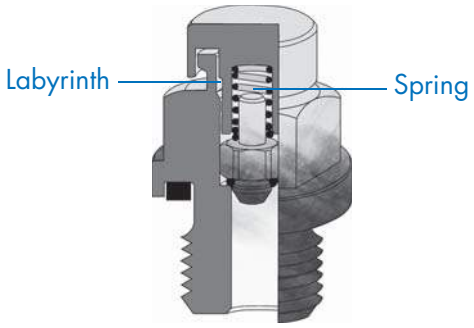

NORD Gear supplies all reducers, except those that are "lubricated for life", with an Autovent™ as a standard feature. In addition, the Autovent™ gives NORD Gear the ability to ship reducers and gear motors with factory-filled lubricant. Since the spring keeps the valve tightly closed regardless of the reducer's orientation, the unit can be inverted during shipment and not develop an oil leak. A metal canopy protects the ball and spring from damage. During operation, oil splash and mist are generated. In contrast to the Autovent™ breather, an open breather can allow these to migrate out, resulting in an undesirable brownish stain around the vent plug.

Quadrilip™ Seals

Quadrilip™ seals are standard for most UNICASE™ gear frame sizes. The smaller gear units do not have dual seals, but the quality of shaft preparation and seal installation is universal.

The Quadrilip™ system is a sign of quality. The seal system consists of two sealing lips, a dust lip, and a grease chamber between the seals. The grease chamber functions as an additional barrier: it helps protect the inner seal lip from damage, and helps prevent external contamination from working its way in. The grease also lubricates the seal lips and keeps them soft and flexible, and prevents them from wearing quickly by reducing friction between the seal lip and shaft surface.

All shaft seal surfaces are either roller burnished or plunge ground, and are an important part of the seal system. With these processes a smooth surface finish of 12-24 pinch rms can be achieved without machine lead that causes the seal surface to act as a pump to force oil out from the reducer or gearmotor.

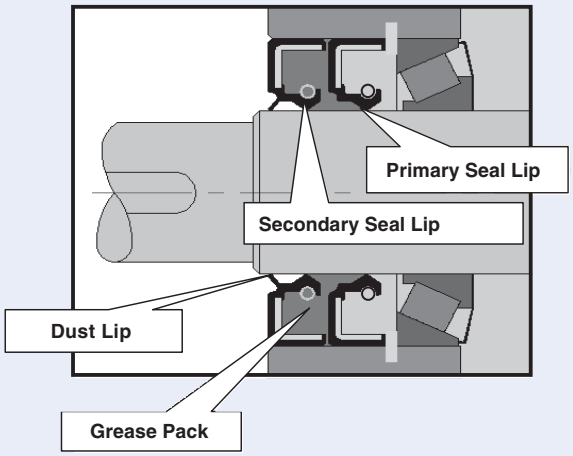

Modular Design

NORD's modular design philosophy provides you with a competitive edge by allowing you to configure drive systems to exactly fit to your applications. More than 20,000,000 combinations of totally unique gearmotors and speed reducers are possible - assembled in-line or right-angle, mounted by foot or flange, featuring solid or hollow shafts with either metric or inch extensions - to give you complete freedom to specify a drive solution that's perfect for you.

Benefits

- More output speeds
- More mounting arrangements/Greater flexibility
- Fewer gear stages/Lower costs
- Metric and inch products

NORD engineers stand ready to assist you with your custom applications. Most standard drives can be modified to your purposes, and custom designs can be developed for special applications.

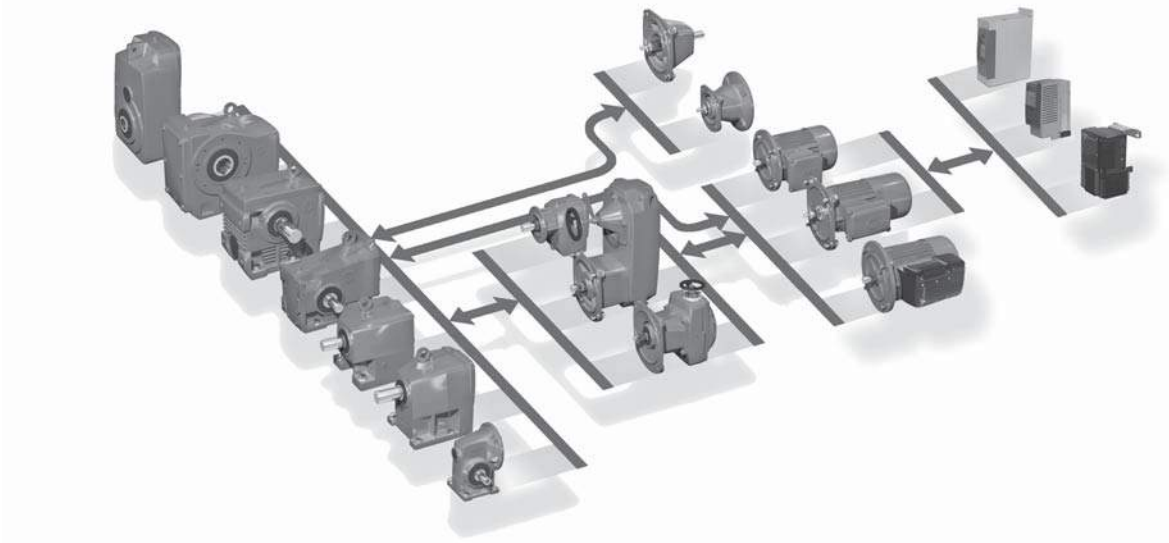

Key Features

Gearing

The gears are made from high strength steel forgings. The teeth are case-hardened then precision finished using either grinding or skive-hobbing methods. As a result, high tooth-to-tooth accuracy is ensured which delivers steady output motion. Tooth stresses are controlled to assure very long durability with infinite life of the gear teeth. Gear torque ratings are thus optimized for a high degree of reliability.

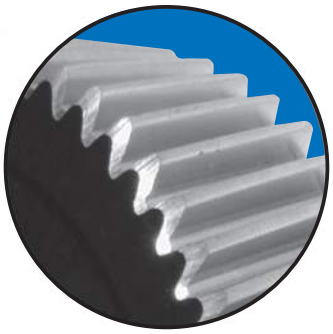

Gear Quality Level: AGMA Class 11-13.

Gear Hardness: Case hardened to 58-62 Rockwell-C.

Gear Finish: All high-speed gears are ground; low-speed gears are skive finished after hardening.

Edge Deburred Gearing.

Designed for infinite life

High-Strength Gearcases

Standard housing material is Class 35 Cast Iron. Some units utilize a corrosion resistant aluminum alloy or diecast aluminum alloy housing material.

NORD's robust housings maintain heavy wall sections. Some competitors have reduced material used in their housings for cost savings. Material has been reduced to the point that the walls are too thin and can flex under load. This will misalign the gears and bearings. In addition, bearing outer races need to be supported with a stiff backing to achieve their rating. Thin housings may not properly support the outer bearing races. Housings are internally painted with a primer to seal casting process residue and fill any surface imperfections.

Lubrication

NORD Gear supplies most all gear units factory-filled with the appropriate oil lubrication type and fill-level per the specified reducer mounting position. The current exceptions include Clincher™ Series parallel-shaft gear units: SK10282, SK10382, SK11282, SK11382, SK12382, and SK9096.1 which are supplied without oil.

It is important that proper oils are used in a gear reducer. By supplying the appropriate lubricant type and amount, NORD Gear eliminates the "guess work" for the consumer.

Properly selected oil will have the required additives to prevent the unwanted formation of foam, oxidation, and rust. As well, the proper extreme pressure additive may be used for hardened alloy steels, or more importantly, not used when it will be a detriment to the bronze gearing in worm reducers. For additional technical information please reference the Lubrication section of this catalog beginning on page 36.

Please see the lubrication table on page 42 for the standard and optional reducer lubrication types, and their service temperature ranges.

High-Performance Motors & Brakemotors

NORD motors are designed to run cool for longer service life. Low rotor inertia and high starting torque allow peak performance in the most difficult applications for inverter and vector duty per NEMA MG 1-2006 Section 31.4.4.2 voltage spikes. Our motors are internationally accepted, conforming to North American NEMA MG 1 and international IEC electrical specifications. High performance options include brakes, encoders, and forced cooling fans.

Compact Coupled (NEMA C-face Input)

NORD Gear supplies reducers with special couplings that eliminate the need for quill-type input with NEMA and IEC frame motors. This allows for superior input shaft alignment and smooth torque transfer, reducing incidents of bearing, shaft, and key failures. Smaller reducers use a proprietary one piece nylon, curved tooth gear coupling with a bronze insert. These materials were selected for their ability to accommodate misalignment, as well as corrosion protection. The bronze insert eliminates steel-to-steel contact allowing ease of motor disassembly even after years of service. Quill-type inputs have steel-to-steel contact between the motor shaft and the quill-input shaft of the reducer. This metal-to-metal contact will undergo fretting corrosion, especially in corrosive or moist environments. Each reducer is shipped from the factory with a sticker on the coupling that shows the proper coupling placement from the motor mounting surface.

Energy Efficient

Combining the UNICASE™ close dimension control and torsionally stiff, stable housings with high quality gearing results in higher operating efficiencies. Our industry leading 98.5% efficiency per gear stage results in significant power savings over the long haul.

Lowering your operating costs is one of our greatest goals! NORD research and development focuses on energy efficiency, with gearboxes, motors, and frequency inverters designed for lower energy consumption. Our fully diverse line of in-line or right-angle units and motors has been developed to suit your needs.

Stainless Steel Paint

NORD stainless steel paint is a plural component, aliphatic polyurethane paint with 316 stainless steel flakes with outstanding physical properties and excellent appearance. This paint has excellent adhesion to cast iron, steel, aluminum and most plastics and can be used as a topcoat or as a primer. The NORD stainless steel paint also has outstanding exterior durability and corrosion resistance, and superior chemical resistance when exposed to most industrial solvents, lubricants and cutting oils. The NORD stainless steel paint is excellent for both indoor and outdoor duty and is non-flammable.

It is designed as a USDA incidental contact coating acceptable for use in food, drug and cosmetic industries. Incidental contact means that the paint may not contain antimony: arsenic, cadmium, lead, mercury, selenium or other materials such as carcinogens, mutagens, or teratogens classified as hazardous substances.

Recapping NORD Stainless Steel Paint Features:

- Solvent based polyurethane paint for increased durability
- Outstanding exterior durability and corrosion resistance
- Superior chemical resistance when exposed to industrial solvents (laquer thinner, acetone, gasoline, Xylol), lubricants, and cutting oils
- Cured coating develops 2H hardness, yet exhibits excellent high impact resistance
- Heat and humidity resistant (tested for 500 hours at 100% humidity and 100°F)
- USDA/H1 compliant - incidental contact
- Colors – Stainless steel gray, white, blue, red, black, and orange

2.0 hp Gearmotors

GEARMOTORS

Motor Power P_n [hp]	Output Speed n_2 [rpm]	Output Torque T_a [lb-in]	Service Factor f_B	AGMA Class	Gear Ratio i_{tot}	Standard Bearings F_{QN} OHL [lb]	Standard Bearings F_{AN} Thrust [lb]	Heavy Duty Bearings (VL) F_{QVL} OHL [lb]	Heavy Duty Bearings (VL) F_{AVL} Thrust [lb]	Model Type	Weight [lb]	Dim. Page
2.0	80	1583	2.2	III	20.87	1550	3933	2025	3933	**SK 9012.1 - 90L/4**	97	484
	68	1861	1.9	II	24.53	1517	4075	2025	4075	SK 9012.1 - 90LH/4		
	60	2098	1.7	II	27.65	1483	4178	2025	4178			
	53	2386	1.5	II	31.45	1436	4295	2025	4295			
	48	2641	1.3	I	34.81	1386	4365	2025	4365			
	40	3160	1.1	I	41.65	1262	4500	2009	4500			
	34	3713	1.0	I	48.95	1085	4500	1904	4500			
	30	4185	0.8	*	55.17	878	4500	1793	4500			
	81	1556	3.0	III	20.51	2025	3902	2025	3902	**SK 9016.1 - 90L/4**	99	492
	72	1753	2.6	III	23.11	2025	4010	2025	4010	SK 9016.1 - 90LH/4		
	63	1994	2.7	III	26.29	2025	4120	2025	4120			
	54	2315	2.3	III	30.52	2025	4255	2025	4255			
	48	2641	2.0	III	34.81	2025	4365	2025	4365			
	41	3104	1.7	II	40.92	2025	4500	2025	4500			
	36	3498	1.5	II	46.11	2005	4500	2025	4500			
	32	3978	1.4	II	52.44	1931	4500	2025	4500			
	26	4853	1.1	I	63.97	1764	4500	2025	4500			
	23	5453	1.0	I	71.88	1618	4500	2025	4500			
	20	6174	0.9	*	81.38	1395	4500	2025	4500			
	153	825	3.0	III	10.88	1638	2567			**SK 92772 - 90L/4**	118	480
	134	943	3.0	III	12.43	1703	2700			SK 92772 - 90LH/4		
	119	1055	2.9	III	13.91	1757	2700					
	106	1183	2.7	III	15.6	1814	2700					
	93	1353	2.7	III	17.83	1827	2700					
	58	2158	2.5	III	28.44	1773	2700					
	52	2431	2.3	III	32.04	1748	2700					
	45	2777	2.1	III	36.61	1712	2700					
	41	3093	1.3	I	40.77	1674	2700					
	36	3484	1.3	I	45.93	1620	2700					
	32	3981	1.3	I	52.48	1537	2700					
	74	1700	3.1	III	22.41	1949	2700	2700	2363	~~SK 9022.1 - 90L/4~~	115	500
	68	1863	2.8	III	24.56	1982	2700	2700	2403	SK 9022.1 - 90LH/4		
	64	1978	3.0	III	26.07	2018	2700	2700	2444			
	57	2215	2.8	III	29.2	2034	2700	2700	2507			
	53	2381	3.0	III	31.38	2018	2700	2700	2547			
	50	2523	2.5	III	33.26	2005	2700	2700	2563			
	42	3017	2.5	III	39.77	1953	2700	2700	2669			
	37	3392	2.2	III	44.71	1906	2700	2700	2725			
	34	3718	2.0	III	49.01	1859	2700	2700	2759			
	32	3946	1.9	II	52.02	1823	2700	2700	2795			
	~~28~~	~~4419~~	~~1.7~~	~~II~~	~~58.25~~	~~1737~~	~~2700~~	~~2660~~	~~2844~~			
	25	5039	1.5	II	66.42	1602	2700	2574	2905			
	~~21~~	~~5985~~	~~1.3~~	~~I~~	~~78.89~~	~~1330~~	~~2700~~	~~2414~~	~~2957~~			
	17	7501	1.0	I	98.88	450	2700	2066	3008			

(AGMA Class I = f_B 1.0 - 1.39 II = f_B 1.4 - 1.99 III = f_B ≥ 2.0 * = f_B < 1.0) **(Model Type in blue is an Energy Efficient motor)**

SK 9022.1 + Motor

SK 9022.1AZ

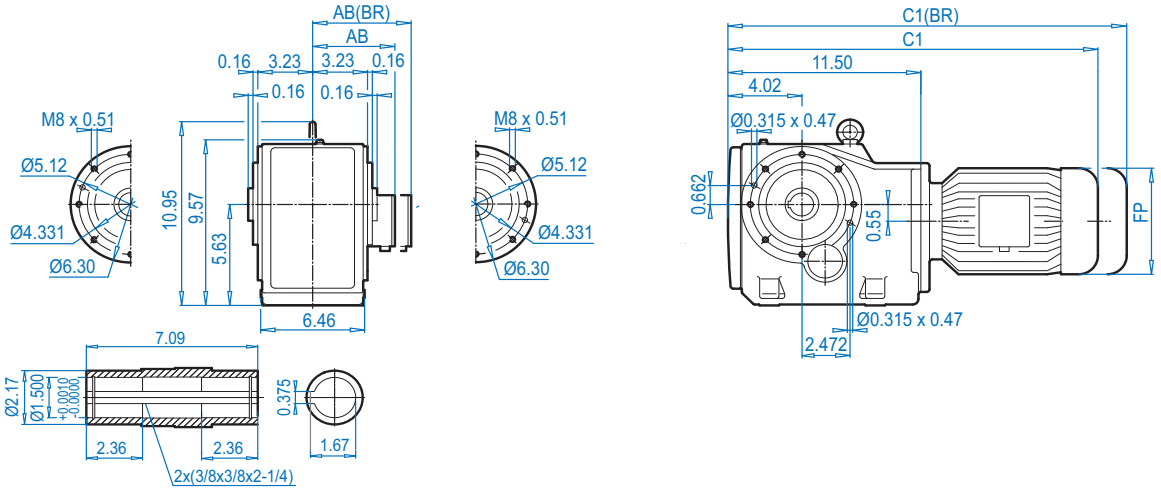

SK 9022.1AZ**K**

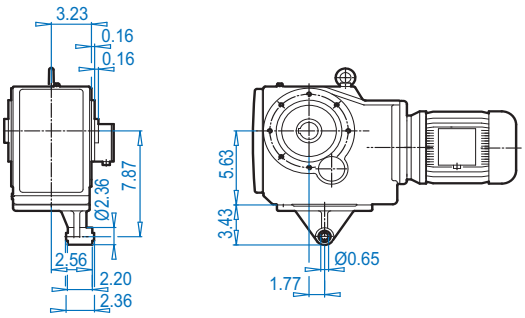

SK 9022.1AZ**D**

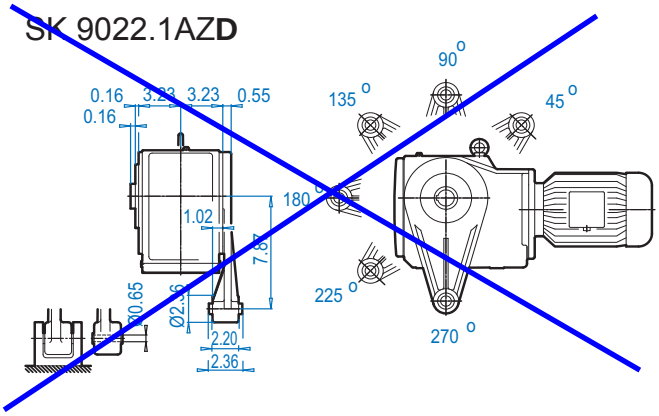

SK 9022.1AZ**B** ⇨🕮 574

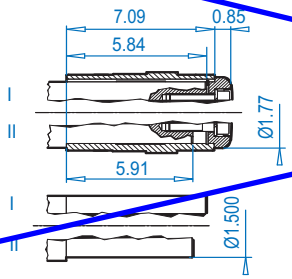

SK 9022.1AZ**S** ⇨🕮 73

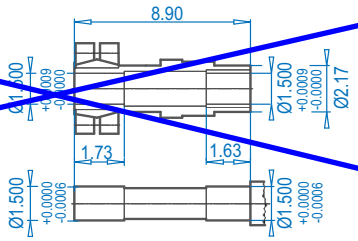

SK 9022.1AZ**SH**

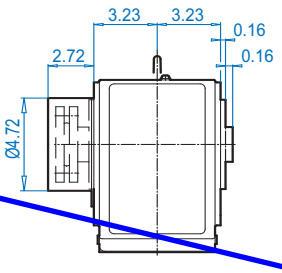

Motor dimensions

Standard efficiency	63S/L	71S/L	80S/L	90S/L	100L		For Other Connection Possibilities please see ⇨🕮 555 & 557
Energy efficiency			80LH	90SH/LH	100LH	112MH	
AB	4.53	4.88	5.59	5.79	6.65	7.05	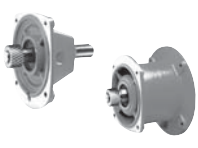
AB (BR)	4.84	5.24	5.63	5.83	6.26	6.69	
C1	19.21	20.79	21.77	23.39	24.57	25.47	
C1 (BR)	21.42	23.07	24.29	26.34	28.15	29.13	
FP	5.12	5.71	6.50	7.20	7.91	8.98	

(BR) denotes Brakemotor

Dimensions in Inches DIMENSIONS

ALTERNATE SHAFTS SEE PAGES 566 - 573

Performance Data

Energy Efficient (EPAct)

230/460V – 60Hz / EE

Inverter duty • TEFC
Synchronous speed 1800rpm @ 60Hz • 4-pole • Three-phase
Voltages: 230/460V – 60Hz • 1.15 Service Factor
Continuous Duty • 40°C Ambient • up to 3300ft Elevation
Class B temperature rise • Class F insulation

Motor Type	Power Pn		Nn Full-load	In Full-Load Current		Ia/In	Code Letter	Torque Tn	Ta/Tn	Tk/Tn	pf	Eff.	Jm Inertia
				230V[a]	460V[a]								
	[hp]	[kW]	[rpm]	[A]	[A]	[%]		[lb-in]				[%]	[lb-ft²]
80LH/4	1	0.75	1750	3.88	1.94	600	L	36.0	4.6	4.3	0.59	82.5	0.051
~~**90SH/4**~~	~~1.5~~	~~1.1~~	~~1740~~	~~4.3~~	~~2.15~~	~~630~~	~~J~~	~~53.1~~	~~3.5~~	~~3.8~~	~~0.76~~	~~84.0~~	~~0.085~~
90LH/4	2	1.5	1745	6.3	3.15	670	K	72.1	4.3	4.5	0.71	84.0	0.092
~~**100LH/4**~~	~~3~~	~~2.2~~	~~1765~~	~~8.6~~	~~4.3~~	~~790~~	~~L~~	~~105~~	~~3.6~~	~~4.7~~	~~0.73~~	~~87.5~~	~~0.179~~
112MH/4	5	3.7	1770	14.4	7.2	810	L	176	4.0	4.8	0.76	87.5	0.304
132SH/4	7.5	5.5	1780	20.9	10.5	820	L	259	4.3	4.6	0.74	89.5	0.75
132MH/4	10	7.5	1770	27.0	13.5	735	J	356	3.2	4.0	0.78	89.5	0.84
160MH/4	15	11	1765	35.8	17.9	810	J	527	2.6	3.2	0.85	91.0	1.23
160LH/4	20	15	1765	49	24.5	850	K	712	2.8	3.5	0.85	91.0	1.35
180MH/4	25	18.5	1770	61	30.5	840	K	879	2.8	3.6	0.83	92.4	3.56
180LH/4	30	22	1770	72	36	880	K	1046	3.1	3.9	0.83	92.4	4.51
200LH/4	40	30	1770	94	47	830	J	1424	3.0	3.6	0.86	93.0	7.60
225SH/4	50	37	1782	-	59	810	J	1758	3.0	3.4	0.84	94.1	9.5
225MH/4	60	45	1782	-	70	820	J	2109	3.0	3.5	0.85	94.3	11.6
250MH/4	75	55	1790	-	86	820	J	2619	2.9	3.4	0.86	95.1	20.4
280SH/4	100	75	1786	-	116	830	J	3506	2.9	3.5	0.85	94.5	36.3
280MH/4	125	90	1786	-	146	800	J	4385	2.8	3.3	0.85	94.9	43.4
315SH/4	150	110	1791	-	174	760	H	5246	2.8	3.1	0.85	95.5	58.8
315MaH/4	200	150	1791	-	225	890	J	6995	3.3	3.5	0.86	95.9	86.9

a) Motors frame 225 and larger are standardly provided as single-voltage 460V and not as dual voltage

Pn - **Full load power**
Nn - **Full load speed**
In - **Full load current**
Ia - **Locked-rotor current**
Ia/In - **Locked-rotor current ratio (%)**
Tn - **Full-load torque**
Ta - **Locked-rotor torque**
Ta/Tn - **Locked-rotor torque ratio**
Tk - **Break-down torque**
Tk/Tn - **Break-down torque ratio**
pf - **Power factor**
Eff - **Normal efficiency**
Jm - **Motor inertia**

MOTORS

This Page Intentionally Left Blank

5.0 hp Gearmotors

Motor Power P_n [hp]	Output Speed n_2 [rpm]	Output Torque T_a [lb-in]	Service Factor f_B	AGMA Class	Gear Ratio i_{tot}	Standard Bearings F_{QN} OHL [lb]	Standard Bearings F_{AN} Thrust [lb]	Heavy Duty Bearings (VL) F_{QVL} OHL [lb]	Heavy Duty Bearings (VL) F_{AVL} Thrust [lb]	Model Type	Weight [lb]	Dim. Page
5.0	55	5735	1.3	I	31.38	1411	2700	2459	2041	**SK 9022.1 - 100LA/4**	130	500
	52	6078	1.0	I	33.26	1296	2673	2396	2018	SK 9022.1 - 112MH/4		
	43	7268	1.0	I	39.77	684	2700	2129	2034			
	39	8171	0.9	*	44.71	-	2673	1861	2018			
	35	8957	0.8	*	49.01	-	2567	1559	1960			
	33	9507	0.8	*	52.02	-	2597	1285	1980			
	203	1550	2.3	III	8.48	1472	2174	3375	1742	**SK 9032.1 - 100LA/4**	174	508
	161	1961	2.2	III	10.73	1559	2333	3375	1832	SK 9032.1 - 112MH/4		
	136	2317	2.1	III	12.68	1613	2455	3375	1895			
	128	2465	2.3	III	13.49	1667	2556	3375	1946			
	110	2875	2.3	III	15.73	1728	2673	3375	2009			
	101	3121	2.2	III	17.08	1746	2720	3375	2036			
	85	3697	2.2	III	20.23	1809	2860	3375	2102			
	72	4370	2.1	III	23.91	1856	2977	3375	2153			
	69	4574	1.9	II	25.03	1863	2977	3375	2160			
	58	5420	1.9	II	29.66	1908	3103	3375	2212			
	48	6508	1.5	II	35.61	1924	3164	3375	2241			
	45	6954	1.6	II	38.05	1944	3200	3375	2266			
	43	7376	1.9	II	40.36	1949	3231	3375	2266			
	36	8717	1.6	II	47.7	1944	3263	3375	2273			
	35	9127	1.5	II	49.94	1922	3231	3375	2266			
	29	10814	1.3	I	59.17	1906	3231	3375	2255			
	27	11711	1.2	I	64.08	1865	3164	3375	2219			
	23	13873	1.0	I	75.91	1694	3103	3375	2180			
	20	15382	0.9	*	84.17	907	3011	3375	2133			
	18	17087	0.8	*	93.5	-	2833	2977	2045			
	50	6285	2.1	III	34.39	6269	9000	6300	3753	~~SK 9042.1 - 100LA/4~~	278	516
	43	7409	2.5	III	40.54	6235	9000	6300	3857	SK 9042.1 - 112MH/4		
	36	8712	2.4	III	47.67	6188	9000	6300	3958			
	31	10178	2.3	III	55.69	6127	9000	6300	4046			
	27	11559	2.0	III	63.25	6059	9000	6300	4079			
	25	12539	2.0	III	68.61	6005	9000	6300	4151			
	23	13922	1.8	II	76.18	5922	9000	6300	4185			
	20	15795	1.6	II	86.43	5794	9000	6300	4219			
	18	17464	1.4	II	95.56	5661	9000	6300	4239			
	~~15~~	~~21527~~	~~1.0~~	~~I~~	~~117.79~~	~~5265~~	~~9000~~	~~6300~~	~~4226~~			
	13	24268	1.0	I	132.79	4930	9000	6300	4120			
	~~11~~	~~29230~~	~~0.8~~	~~*~~	~~159.94~~	~~4131~~	~~9000~~	~~6300~~	~~4086~~			
	28	11407	2.5	III	62.42	8550	10125	8550	6935	**SK 9052.1 - 100LA/4**	443	524
	24	13202	2.4	III	72.24	8503	10125	8550	7171	SK 9052.1 - 112MH/4		
	20	16113	2.2	III	88.17	8397	10125	8550	7502			
	17	18714	1.9	II	102.4	8282	10125	8550	7733			
	14	21936	1.9	II	120.03	8116	10125	8550	7972			
	12	26529	1.2	I	145.16	7823	10125	8550	8258			
	10	30929	1.4	II	169.24	7477	10125	8550	8431			
	8.7	36255	1.2	I	198.38	6959	10125	8550	8651			

(AGMA Class I = f_B 1.0 - 1.39 II = f_B 1.4 - 1.99 III = f_B ≥ 2.0 * = f_B < 1.0) **(Model Type in blue is an Energy Efficient motor)**

SK 9042.1 + Motor

SK 9042.1AZ

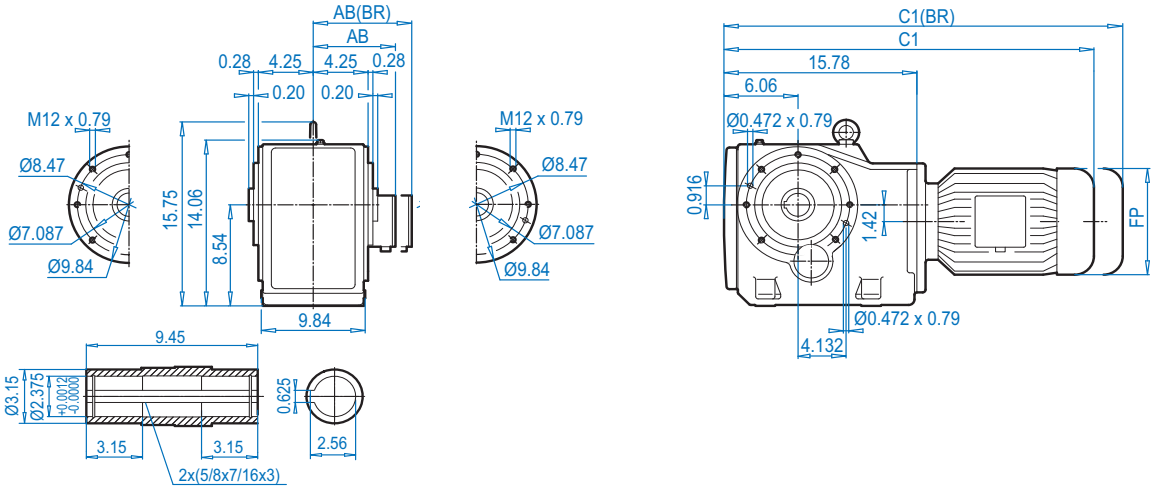

SK 9042.1AZ**K**

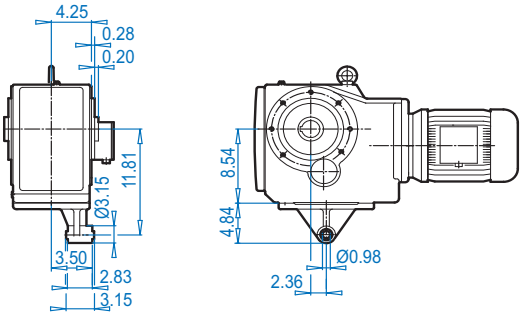

SK 9042.1AZ**D**

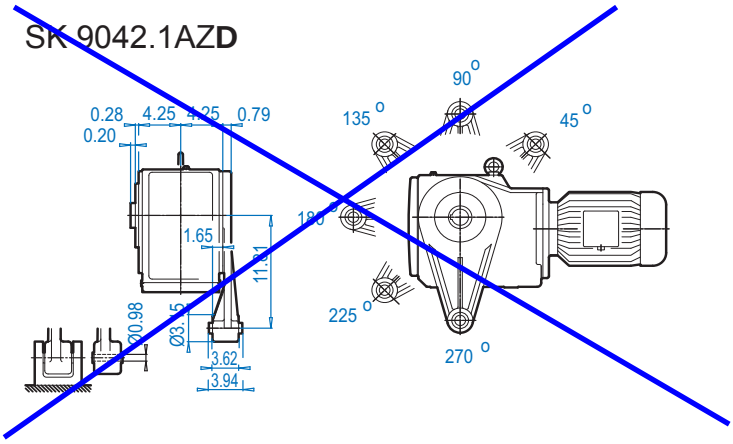

SK 9042.1AZ**B** ⇨🕮 574

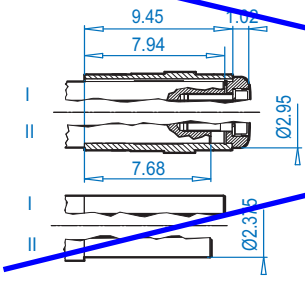

SK 9042.1AZ**S** ⇨🕮 73

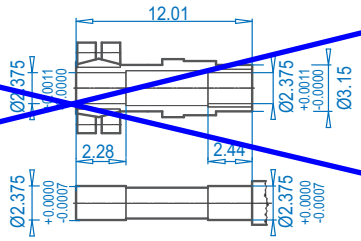

SK 9042.1AZ**SH**

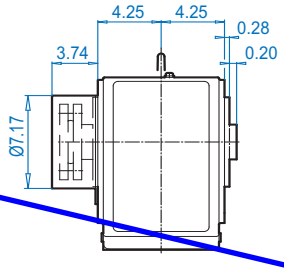

Motor dimensions

Standard efficiency	90S/L	100L		132S/M	160M/L		For Other Connection Possibilities please see ⇨🕮 555 & 557
Energy efficiency	90SH/LH	100LH	112MH	132SH/MH	160MH	160LH	
AB	5.79	6.65	7.05	8.03	8.90	8.90	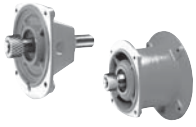
AB (BR)	5.83	6.26	6.69	7.72	8.90	8.90	
C1	26.65	27.83	28.74	32.13	34.61	34.61	
C1 (BR)	29.61	31.42	32.40	36.34	41.19	41.19	
FP	7.20	7.91	8.98	10.47	12.60	12.60	

(BR) denotes Brakemotor

Performance Data

Energy Efficient (EPAct)

230/460V – 60Hz / EE

Inverter duty • TEFC
Synchronous speed 1800rpm @ 60Hz • 4-pole • Three-phase
Voltages: 230/460V – 60Hz • 1.15 Service Factor
Continuous Duty • 40°C Ambient • up to 3300ft Elevation
Class B temperature rise • Class F insulation

Motor Type	Power Pn		Nn Full-load	In Full-Load Current		Ia/In	Code Letter	Torque Tn	Ta/Tn	Tk/Tn	pf	Eff.	Jm Inertia
				230V[a]	460V[a]								
	[hp]	[kW]	[rpm]	[A]	[A]	[%]		[lb-in]				[%]	[lb-ft²]
80LH/4	1	0.75	1750	3.88	1.94	600	L	36.0	4.6	4.3	0.59	82.5	0.051
90SH/4	1.5	1.1	1740	4.3	2.15	630	J	53.1	3.5	3.8	0.76	84.0	0.085
90LH/4	2	1.5	1745	6.3	3.15	670	K	72.1	4.3	4.5	0.71	84.0	0.092
~~**100LH/4**~~	~~3~~	~~2.2~~	~~1765~~	~~8.6~~	~~4.3~~	~~790~~	~~L~~	~~105~~	~~3.6~~	~~4.7~~	~~0.73~~	~~87.5~~	~~0.178~~
112MH/4	5	3.7	1770	14.4	7.2	810	L	176	4.0	4.8	0.76	87.5	0.304
~~**132SH/4**~~	~~7.5~~	~~5.5~~	~~1780~~	~~20.9~~	~~10.5~~	~~820~~	~~L~~	~~259~~	~~4.3~~	~~4.6~~	~~0.74~~	~~89.5~~	~~0.75~~
132MH/4	10	7.5	1770	27.0	13.5	735	J	356	3.2	4.0	0.78	89.5	0.84
160MH/4	15	11	1765	35.8	17.9	810	J	527	2.6	3.2	0.85	91.0	1.23
160LH/4	20	15	1765	49	24.5	850	K	712	2.8	3.5	0.85	91.0	1.35
180MH/4	25	18.5	1770	61	30.5	840	K	879	2.8	3.6	0.83	92.4	3.56
180LH/4	30	22	1770	72	36	880	K	1046	3.1	3.9	0.83	92.4	4.51
200LH/4	40	30	1770	94	47	830	J	1424	3.0	3.6	0.86	93.0	7.60
225SH/4	50	37	1782	-	59	810	J	1758	3.0	3.4	0.84	94.1	9.5
225MH/4	60	45	1782	-	70	820	J	2109	3.0	3.5	0.85	94.3	11.6
250MH/4	75	55	1790	-	86	820	J	2619	2.9	3.4	0.86	95.1	20.4
280SH/4	100	75	1786	-	116	830	J	3506	2.9	3.5	0.85	94.5	36.3
280MH/4	125	90	1786	-	146	800	J	4385	2.8	3.3	0.85	94.9	43.4
315SH/4	150	110	1791	-	174	760	H	5246	2.8	3.1	0.85	95.5	58.8
315MaH/4	200	150	1791	-	225	890	J	6995	3.3	3.5	0.86	95.9	86.9

a) Motors frame 225 and larger are standardly provided as single-voltage 460V and not as dual voltage

Pn - **Full load power**
Nn - **Full load speed**
In - **Full load current**
Ia - **Locked-rotor current**
Ia/In - **Locked-rotor current ratio (%)**
Tn - **Full-load torque**
Ta - **Locked-rotor torque**
Ta/Tn - **Locked-rotor torque ratio**
Tk - **Break-down torque**
Tk/Tn - **Break-down torque ratio**
pf - **Power factor**
Eff - **Normal efficiency**
Jm - **Motor inertia**

This Page Intentionally Left Blank

TAB 9

This Page Intentionally Left Blank

ITEM No.	ROLLER DIA	BEARING SIZE
1	26"	75 mm
2	20"	75 mm
3	14"	75 mm
4	10 3/4"	75 mm
5	10 3/4"	75 mm
6	10 3/4"	75 mm
7	10 3/4"	75 mm
8	9 3/8"	75 mm
9	8 5/8"	75 mm
10	8 5/8"	75 mm
11	8 5/8"	75 mm
12	8 5/8"	75 mm
13	7 3/8"	75 mm
14	8 5/8"	75 mm
15	8 5/8"	75 mm
16	7 3/8"	75 mm
17	8 5/8"	75 mm
18	8 5/8"	75 mm
19	8 5/8"	75 mm
20	8 5/8"	75 mm
21	7 3/8"	75 mm
22	9 3/8"	75 mm

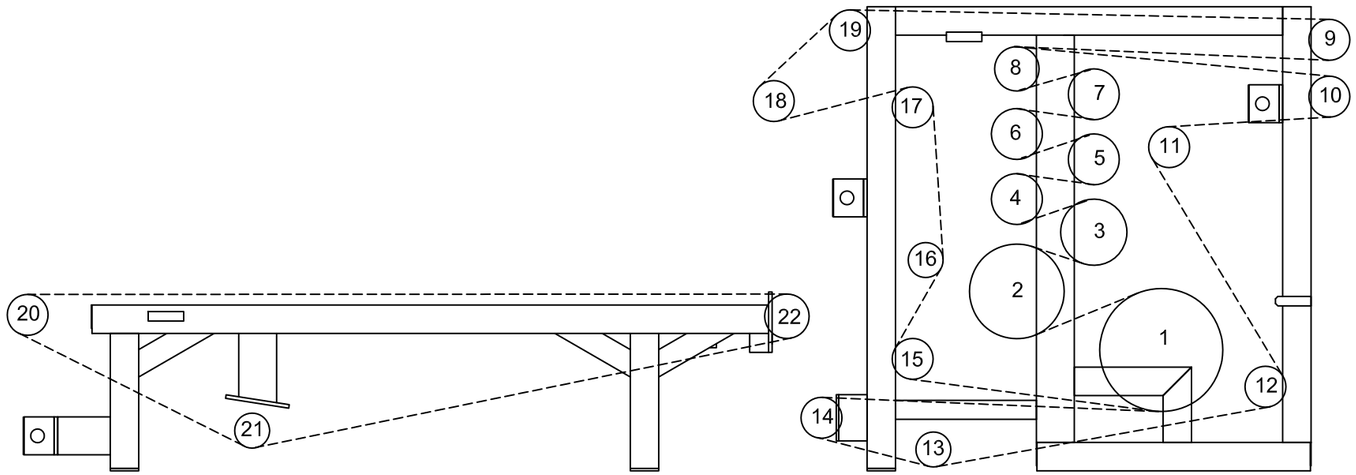

DRAWN TMP	9/28/09
APPROVED	

G.E.C. TOLERANCES UNLESS OTHERWISE SPECIFIED

FRACTIONAL DIM ±1/64
DECIMAL DIM ±.005
ANGLE ± 1/2
SURFACE FINISH 125

CHARTER MACHINE COMPANY
55 WESTER AVE METUCHEN N.J. 08840

TITLE
3 BELT TOWER PRESS 00.93S
ROLLER &
BEARING LOCATIONS

SIZE		DWG NO.	REV
B		3BTP00.93S-04	1

SCALE NONE SHEET 1 OF 1

This Page Intentionally Left Blank

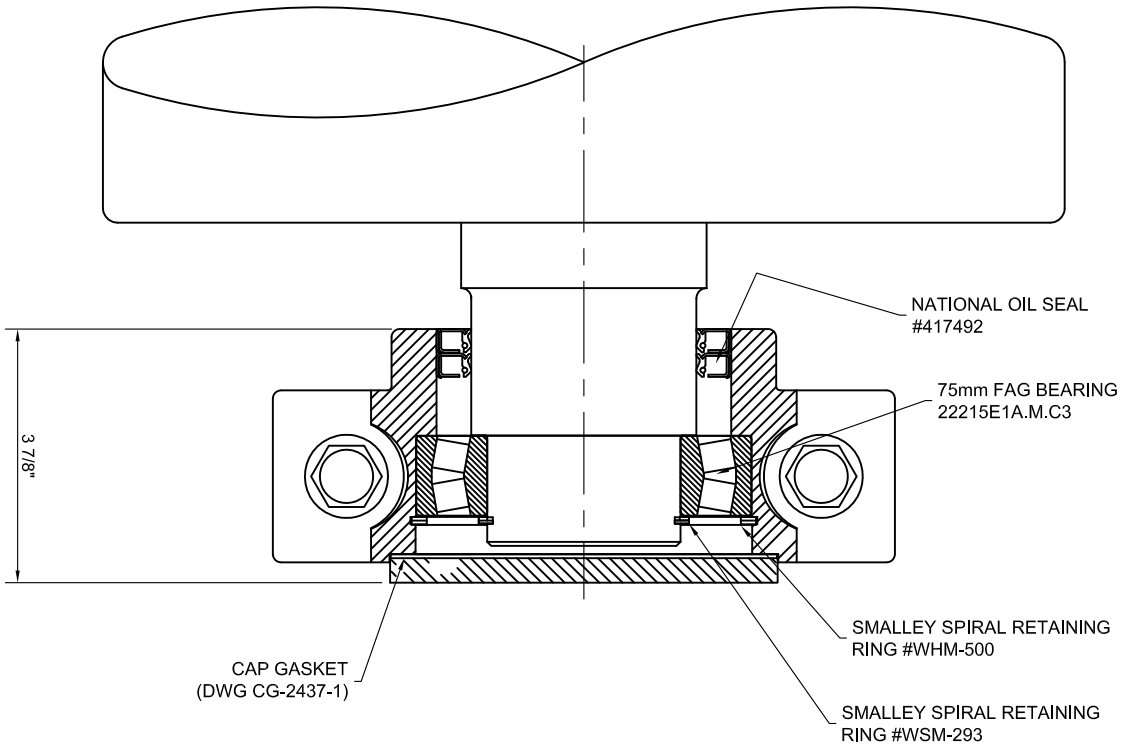

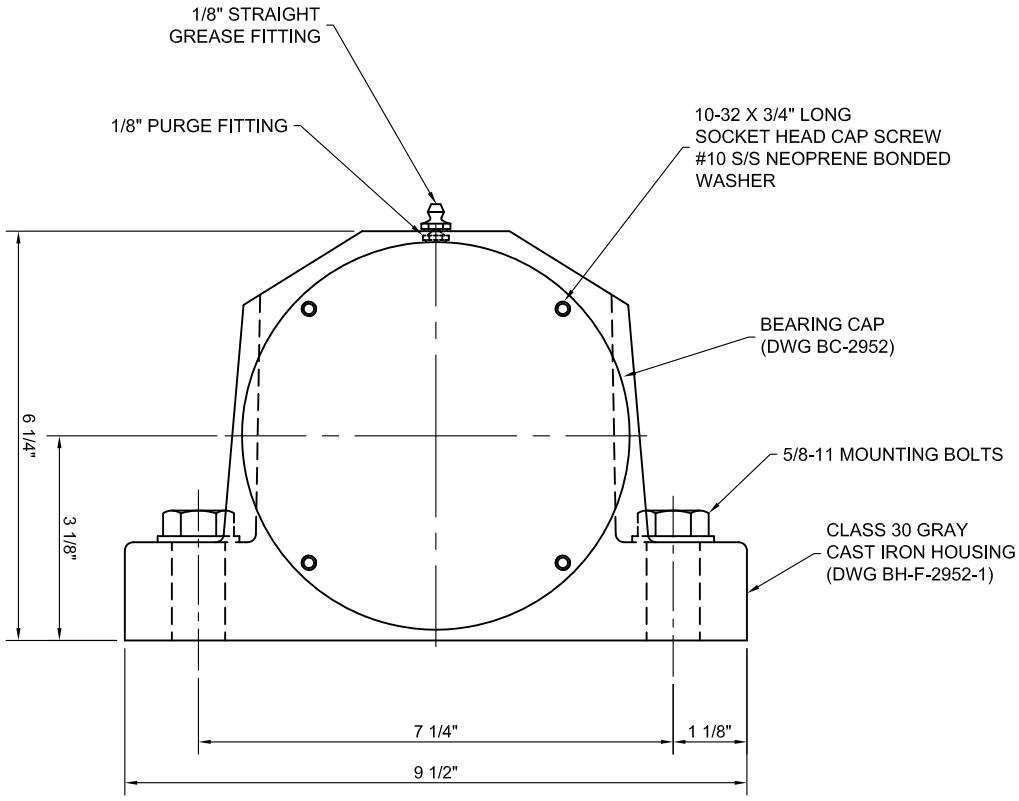

DRAWN TMP	10/28/08	CHARTER MACHINE COMPANY
APPROVED		55 WESTER AVE METUCHEN N.J. 08840
		TITLE: TP 00.43S 75mm BEARING CLOSED CAP ASSEMBLY
G.E.C. TOLERANCES UNLESS OTHERWISE SPECIFIED		SIZE B / DWG NO. TP00.43S-B-2952-1 / REV 1
FRACTIONAL DIM ±1/64		SCALE NTS / SHEET 1 OF 1
DECIMAL DIM ±.005		
ANGLE ± 1/2		
SURFACE FINISH 125		

This Page Intentionally Left Blank

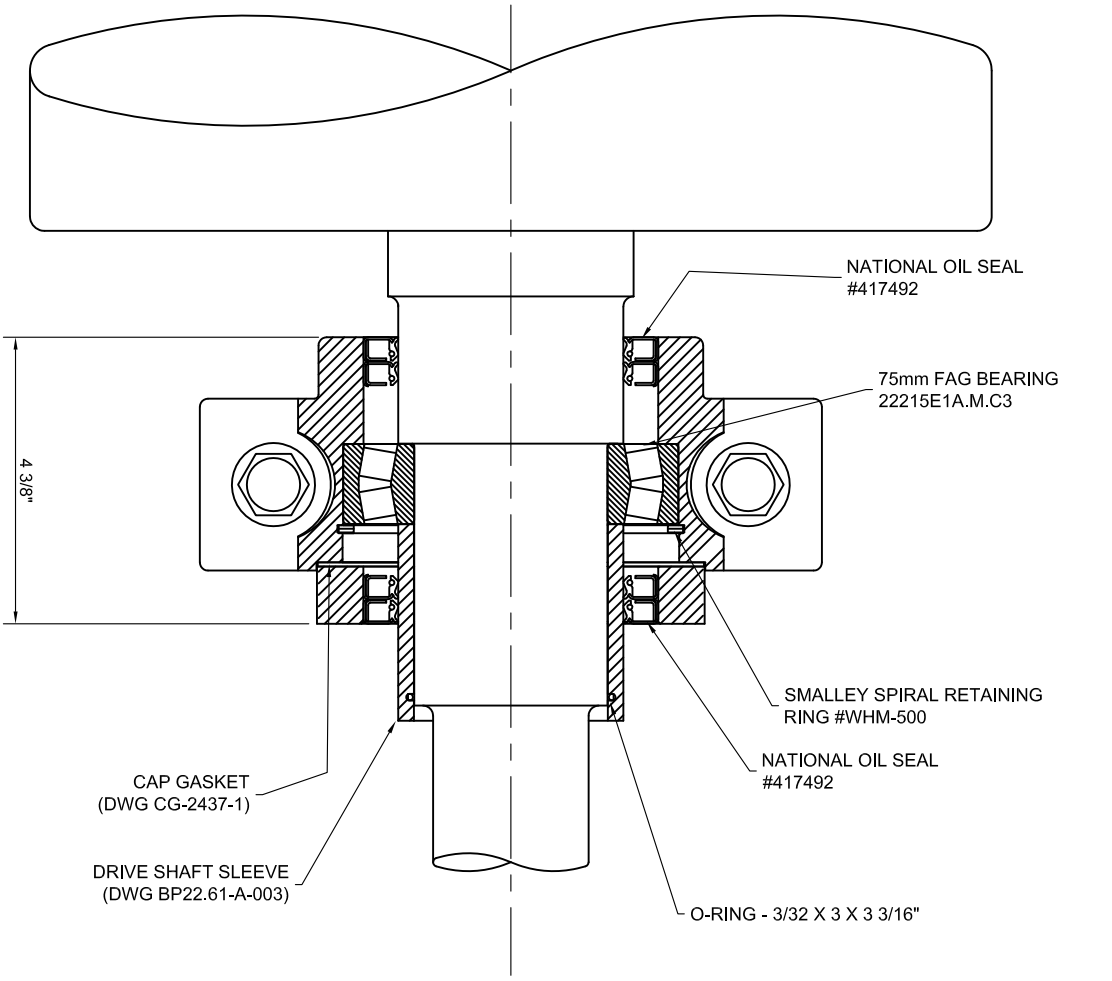

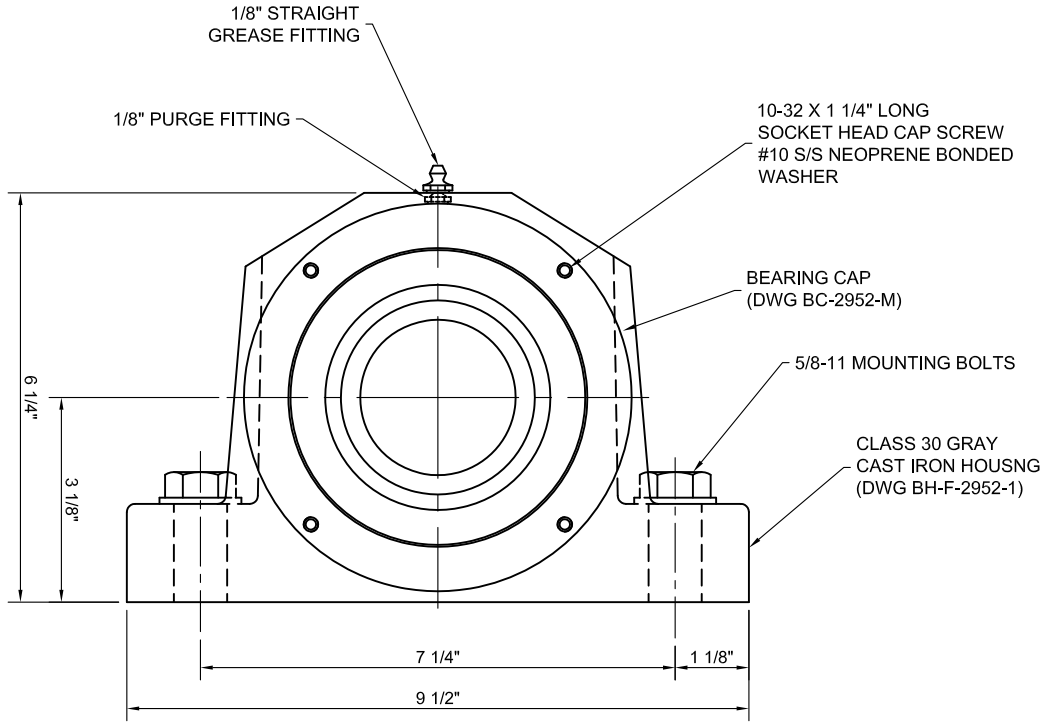

DRAWN TMP	10/28/08	CHARTER MACHINE COMPANY
APPROVED		55 WESTER AVE METUCHEN N.J. 08840
		TITLE: TP 00.43S 75mm BEARING DRIVE BEARING ASSEMBLY
G.E.C. TOLERANCES UNLESS OTHERWISE SPECIFIED FRACTIONAL DIM ±1/64 DECIMAL DIM ±.005 ANGLE ± 1/2 SURFACE FINISH 125		SIZE B | DWG NO. TP00.43S-B-2952-2 | REV 2 SCALE NTS | SHEET 1 OF 1

This Page Intentionally Left Blank

FAG Spherical Roller Bearings

The FAG spherical roller bearing is well known for its heavy-duty capabilities. It incorporates two rows of symmetrical barrel-shaped rollers, which can align themselves freely in the spherical outer ring raceway, thereby providing compensation for shaft deflection and bearing seat misalignment.

FAG spherical roller bearings are produced in E1-type design depending on their size and series. Unlike other spherical roller bearings, these bearings have no center lip on the inner ring, allowing for a maximum number of longer rollers with a large diameter. The close contact between the rollers and the raceways yields a uniform stress distribution, and the optimization of roller size permits distinctly higher load carrying capacity than conventional spherical roller bearings.

FAG E1 spherical roller bearings are designed for exposure to high radial, or axial loads, unbalanced forces, vibration stress, angular misalignment, and constant high temperature.

FAG Spherical Roller Bearing E1

E1A.M.C3 – E1-type, maximum capacity, modified internal design, lubricating groove and three lubricating holes in the outer ring, machined brass cage, roller riding, and radial clearances larger than normal.

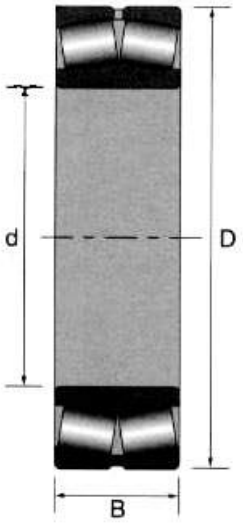

Shaft	FAG Part No.	Part No.	Dimension			Load Rating (lbs.)	Weight (lbs)
			d (mm)	D	B		
2.95”	22215E1A.M.C3	045-243-0113	75	130	31	48,558	3.79

NATIONAL OIL SEAL

Shaft	Hsg. Bore	Seal O.D.	Seal Width	Lip Mat'l	Part #	Type/ Illus.
3.437"	4.501	4.506	.375	Nitrile	417492	41
2.437	3.125	3.130	.375	Nitrile	471887	47

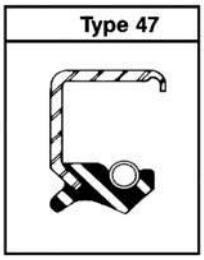

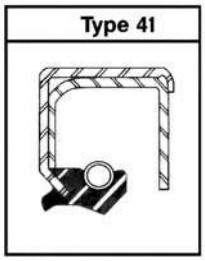

NITRILE LIP SEAL PROPERTIES			
Durometer	Oil Resistance	Abrasion Resistance	Service Temp.
60 -80	Very Good	Excellent	-50° / 250°F

Spring loaded – preferred industrial design
Dual Lip – extra contaminate exclusion
Shaft Speeds - 0 - 1000 feet per minute
Max. Pressure - 7 PSI
Shaft Finish - 15 to 25 micro-inch
Shaft Hardness - Abrasive Above C-45 Rockwell
Shaft Run Out - 0 - 800 rpm, .025" TIR
Shaft to Bore Misalignment - 0 to 800 rpm,.015" ECC.

RILSAN RILSAN CORPORATION 139 Harristown Road, Glen Rock, New Jersey 07452 (201) 447-3300
In Canada: Rilsan Limited, 1262 Don Mills Road, Suite 91, Don Mills, Ontario M3B2W7 (416) 444-113

Protecting Metal Surfaces with Nylon 11 Powder Coating

The weakest part of most metal components is the surface. It is here that corrosion and wear take their toll, and where most metals fail.

Corrosion alone is responsible for more than 5 ½ billion dollars damage to metal parts and structures in the United States each year. The effects of mechanical wear are incalculable.

One of the most effective methods of preventing metal failures is to protect their surface against corrosion and wear with a coating of nylon 11.

The coating is applied in powdered form either by electrostatic deposition or by the fluid bed process and fused on to the surface of the metal. Coating thickness can be as low as .0025" and as thick as .050.

Protection of a metal surface with Rilsan Nylon 11 coating offers the following advantages.

(a) **Excellent corrosion resistance**: Rilsan coatings resist a broad range of chemical environment. Salt spray testing in excess of 2000 hours and immersion in sea water for 6 years cause no corrosion of the metal substrates.

(b) **Improved abrasion resistance and longer life:** The low coefficient of friction of Rilsan can be used to advantage on such parts as cams, gears, sliding components, and other moving parts to reduce wear and suppress mechanical noise.

(c) **High impact resistance**: A coated steel tube with a 300 micron (12 mils or .012") thick layer was repeatedly struck with a 1 kg (2.2 lb.) weight, without the slightest sign of peeling or exposure of the base metal, even though tube was deformed.

(d) **Good sanitary properties**: Rilsan coatings are inert to fungus growth and are highly stain resistant. These properties are important for maintenance and clean up and the preservation of colorful and clear finishes.

(e) **Good outdoor weathering**: Rilsan Coatings are resistant to ultra-violet radiation. The degree of resistance may be enhanced by the incorporation of additives and colorants designed to counter the adverse effects of UV radiation. For applications where long-term UV resistance is important, we recommend you to consult with us to ensure the optimum formulation for your needs.

(f) **Good electrical properties**: Rilsan Nylon 11 coatings have good dielectric properties. The thicker the coating the better its insulating effect.

RILSAN Nylon 11 Coating Applications

Some of the applications for which Rilsan Nylon 11 powder coating will improve the performance, appearance or service life include:

(a) Institutional furniture – such as hospital beds to provide electrical insulation; office furniture to resist scratching and assure long life; playground equipment to eliminate maintenance.

(b) Industrial pipe and related fittings to resist corrosion and abrasion.

(c) Food processing machinery and equipment – such as racks, shelves, conveyors, mixing blades, etc. to reduce costs by replacing stainless steel, eliminate corrosion and staining, reduce cleaning costs.

(d) Farm equipment & fertilizer conveyor screws, scales, pipe, stalls, etc.

(e) Material handling equipment – racks, processing baskets, conveyor rollers.

(f) Dishwasher tubs and baskets.

(g) Outdoor furniture.

(h) Marine applications – rackings, hardware, etc.

(i) Miscellaneous – shopping carts, ornamental iron, high pressure gas tanks, and for replacing chrome plating and stainless steel for a broad range of industrial products.

Powder Coating Techniques

Two basic processes are used for powder coating metals with Rilsan fine powders: The Fluid Bed Process and the Electrostatic Deposition Process. Roediger shall use the Electrostatic Projection Process for the rolls.

Electrostatic Projection
In the electrostatic projection process, powders are passed through a nozzle carrying a high electrical potential. The powder particles become charged and are attracted to the metal part, which is at zero potential. The thickness of the coating is a function of spraying time and applied voltage.

Since Rilsan Nylon 11 is thermoplastic it is only necessary to melt the adhered powder in an oven to fuse the coating to the metal surface. Fusion temperatures range from 400°F to 450°F.

Most metal parts can be coated with Rilsan Nylon 11, provided they can be raised to the temperature necessary for the coating operation without undergoing a physical change or dimensional distortion.

The various steps in the preparation and coating of a metal part with Nylon 11 are illustrated on these pages. Preparation of the part for coating is basically the same whether the part is to be coated by the electrostatic or fluid bed process. All surfaces must be cleaned to remove oil, grease and rust. Also, a primer coat is often recommended to improve the adherence of the Nylon 11 powder to the surface of the metal. Primers marketed by Rilsan include Rilsan Primer P and Rilprim P104.

Rilsan Primer P is a one component, general purpose primer for parts to be subjected to moderate working conditions.

Advantages of the Electrostatic Process
- Best for thin decorative and functional coatings; .0025 to .008 inch.
- Ready masking on non-coated areas.
- Easy correction of coating errors prior to fusion
- Lower cost where thin films are adequate.

The application of Rilsan Nylon 11 powder coating – whether by fluid bed or electrostatic deposition – involves a number of process variables and powder selections that are beyond the scope of this brochure. Rilsan's technical personnel should be consulted on specific requirements and on how best to optimize either of these processes to meet those requirements.

Properties of Rilsan Coating Powders

Rilsan Nylon 11 is a thermoplastic polyamide produced by Rilsan Corporation from a vegetable source, rather than a petroleum source. It is one of the oldest coating powders in existence.

The most significant characteristic of Rilsan Nylon 11 powder is its ease of application due to its optimum melt zone, permitting latitude in processing and providing resistance to cratering and pinholes.

Particle size and viscosity characteristics of Rilsan powders are controlled so that the melt viscosity is high enough to prevent sagging and running, yet fluid enough to achieve proper leveling, flow-out and wetting of the substrate.

High gloss finishes (Gardner Gloss of 65-95%) are obtained by water quenching. Air cooling results in finishes of 30 to 70% gloss.

Rilsan fine powders are available in a wide range of standard colors, as well as in custom colors matched to customer requirements.

Some applications will require the use of a primer prior to the application of the final Rilsan coating to assure proper adhesion and uniformity of coating thickness.

Rilsan RDP-17-1 is a water based, non-flammable dispersion of Nylon 11 coating powder which can be applied by employing wet-paint, air spray equipment.

For optimum results, it should be applied as is, without thinning with water or any commercial solvent which may alter the viscosity or other liquid characteristics.

The film thickness, which is dependent upon spraying conditions, is comparable to most commodity powder coating material. Film properties are similar to those achieved by depositing Nylon 11 by the conventional electrostatic technique.

Economics of Rilsan Powder Coating

The true value of a surface coating is a function of how well it performs the job for which it was originally considered.

For example, a coating which fails prematurely, but which costs half as much as a coating that protected the metal surface for the life of the part, would hardly be called a bargain.

One must therefore carefully consider performance in conjunction with cost.

Since powder coatings are sold by the pound, yet are used to cover surfaces, an expression of the relationship between cost and coverage must be made. This relationship is as follows:

Coverage (ft^2 * mil/lb.)	=	192 / Spec. Gravity
Cost/ft^2 * mil	=	Cost/lb. / Coverage

The specific gravity of Nylon 11 powders varies according to the pigment used. These variations are not too great since minimal levels of pigment are used.

Coverage rates per pound for Rilsan Nylon 11 coatings range from 160 square feet per mil thickness to 185 square feet per mil thickness. Whites and tint colors usually fall in the lower range, while black and mass-tone colors are on the higher scale.

Since Rilsan Nylon 11 is thermoplastic, it offers savings in processing time that are often sufficient to justify its use where thermoset materials are currently being applied at a lower per-pound cost. Nylon 11 does not require post-curing, as do thermoset materials.

The most accurate information on the economics of Nylon 11 powder coating is obtainable from a qualified custom coater. Rilsan representatives will be glad to offer recommendations.

PROPERTIES	RDP Pigmented Electrostatic
60° Gloss – air cooled	68
Coverage, Ft^2 * mil/Pound	162
Coverage, Ft^2 * mil/Gallon	-
Film Thickness – Minimum Mils	2.5
- Maximum Mils	7-8
ELECTRICAL:	
Dielectric Strength	1600 (7)
PHYSICAL:	
Melt Point °C	190
Specific Gravity	1.19
Bulk Density, Kilogram/Liter	0.39
Coefficient of Friction (2)	.32/.17
Tabor Abrasion (3)	17
Impact – Primed (4)	100
- Unprimed	100
Adhesion, Initial – Primed (5)	4.0
- Unprimed	2.0
Adhesion after 1 hour water boil	
- Primed – Rilprim P104	-
- Unprimed -	-
Adhesion After 3 hour water boil	
- Primed	4.0
- Unprimed	0
THERMAL:	
Coefficient of Thermal Expansion	
-30°C to +30°C, in./in. = 10^{-5}/°C	9.4
Heat of Fusion (of powder) cal/gm	8.5
APPROVALS	
USDA	Yes
CHEMICAL RESISTANCE: (6)	
Strong Alkalies	A
Strong Acids	X
Weak Acids	B
Grease, Oil	A
Commercial Solvents	A
Weathering	A

(1) Volts/Mil at 13 mils Film Thickness – ASTM D149 – Short Time Method
(2) Against Steel – Static/Dynamic
(3) Tabor Abrasion – mg Loss/1000 Cycles, CS-17 Wheel, 1000 g Load.
(4) Direct and Reverse, 160 in. lb. Gardner, -Electrostatic – 0.032" Thick Mild Steel Panel
(5) Rating Scale is: 4 – Excellent, 3 – Good, 2 – Fair, 1 – Poor and 0 – None
(6) Rating Scale: A – Good; B – Should be checked by application tests; X – Poor
(7) Volts/Mil at 6 mils Film Thickness – ASTM D149 Short Time Method
(8) Up to 50 mils Depending on Preheating Conditions

This Page Intentionally Left Blank

TAB 10

This Page Intentionally Left Blank

RILSAN RILSAN CORPORATION 139 Harristown Road, Glen Rock, New Jersey 07452 (201) 447-3300
In Canada: Rilsan Limited, 1262 Don Mills Road, Suite 91, Don Mills, Ontario M3B2W7 (416) 444-113

Protecting Metal Surfaces with Nylon 11 Powder Coating

The weakest part of most metal components is the surface. It is here that corrosion and wear take their toll, and where most metals fail.

Corrosion alone is responsible for more than 5 ½ billion dollars damage to metal parts and structures in the United States each year. The effects of mechanical wear are incalculable.

One of the most effective methods of preventing metal failures is to protect their surface against corrosion and wear with a coating of nylon 11.

The coating is applied in powdered form either by electrostatic deposition or by the fluid bed process and fused on to the surface of the metal. Coating thickness can be as low as .0025" and as thick as .050.

Protection of a metal surface with Rilsan Nylon 11 coating offers the following advantages.

(a) **Excellent corrosion resistance**: Rilsan coatings resist a broad range of chemical environment. Salt spray testing in excess of 2000 hours and immersion in sea water for 6 years cause no corrosion of the metal substrates.

(b) **Improved abrasion resistance and longer life:** The low coefficient of friction of Rilsan can be used to advantage on such parts as cams, gears, sliding components, and other moving parts to reduce wear and suppress mechanical noise.

(c) **High impact resistance**: A coated steel tube with a 300 micron (12 mils or .012") thick layer was repeatedly struck with a 1 kg (2.2 lb.) weight, without the slightest sign of peeling or exposure of the base metal, even though tube was deformed.

(d) **Good sanitary properties**: Rilsan coatings are inert to fungus growth and are highly stain resistant. These properties are important for maintenance and clean up and the preservation of colorful and clear finishes.

(e) **Good outdoor weathering**: Rilsan Coatings are resistant to ultra-violet radiation. The degree of resistance may be enhanced by the incorporation of additives and colorants designed to counter the adverse effects of UV radiation. For applications where long-term UV resistance is important, we recommend you to consult with us to ensure the optimum formulation for your needs.

(f) **Good electrical properties**: Rilsan Nylon 11 coatings have good dielectric properties. The thicker the coating the better its insulating effect.

RILSAN Nylon 11 Coating Applications

Some of the applications for which Rilsan Nylon 11 powder coating will improve the performance, appearance or service life include:

(a) Institutional furniture – such as hospital beds to provide electrical insulation; office furniture to resist scratching and assure long life; playground equipment to eliminate maintenance.

(b) Industrial pipe and related fittings to resist corrosion and abrasion.

(c) Food processing machinery and equipment – such as racks, shelves, conveyors, mixing blades, etc. to reduce costs by replacing stainless steel, eliminate corrosion and staining, reduce cleaning costs.

(d) Farm equipment & fertilizer conveyor screws, scales, pipe, stalls, etc.

(e) Material handling equipment – racks, processing baskets, conveyor rollers.

(f) Dishwasher tubs and baskets.

(g) Outdoor furniture.

(h) Marine applications – rackings, hardware, etc.

(i) Miscellaneous – shopping carts, ornamental iron, high pressure gas tanks, and for replacing chrome plating and stainless steel for a broad range of industrial products.

Powder Coating Techniques

Two basic processes are used for powder coating metals with Rilsan fine powders: The Fluid Bed Process and the Electrostatic Deposition Process. Roediger shall use the Electrostatic Projection Process for the rolls.

Electrostatic Projection
In the electrostatic projection process, powders are passed through a nozzle carrying a high electrical potential. The powder particles become charged and are attracted to the metal part, which is at zero potential. The thickness of the coating is a function of spraying time and applied voltage.

Since Rilsan Nylon 11 is thermoplastic it is only necessary to melt the adhered powder in an oven to fuse the coating to the metal surface. Fusion temperatures range from 400°F to 450°F.

Most metal parts can be coated with Rilsan Nylon 11, provided they can be raised to the temperature necessary for the coating operation without undergoing a physical change or dimensional distortion.

The various steps in the preparation and coating of a metal part with Nylon 11 are illustrated on these pages. Preparation of the part for coating is basically the same whether the part is to be coated by the electrostatic or fluid bed process. All surfaces must be cleaned to remove oil, grease and rust. Also, a primer coat is often recommended to improve the adherence of the Nylon 11 powder to the surface of the metal. Primers marketed by Rilsan include Rilsan Primer P and Rilprim P104.

Rilsan Primer P is a one component, general purpose primer for parts to be subjected to moderate working conditions.

Advantages of the Electrostatic Process
- Best for thin decorative and functional coatings; .0025 to .008 inch.
- Ready masking on non-coated areas.
- Easy correction of coating errors prior to fusion
- Lower cost where thin films are adequate.

The application of Rilsan Nylon 11 powder coating – whether by fluid bed or electrostatic deposition – involves a number of process variables and powder selections that are beyond the scope of this brochure. Rilsan's technical personnel should be consulted on specific requirements and on how best to optimize either of these processes to meet those requirements.

Properties of Rilsan Coating Powders

Rilsan Nylon 11 is a thermoplastic polyamide produced by Rilsan Corporation from a vegetable source, rather than a petroleum source. It is one of the oldest coating powders in existence.

The most significant characteristic of Rilsan Nylon 11 powder is its ease of application due to its optimum melt zone, permitting latitude in processing and providing resistance to cratering and pinholes.

Particle size and viscosity characteristics of Rilsan powders are controlled so that the melt viscosity is high enough to prevent sagging and running, yet fluid enough to achieve proper leveling, flow-out and wetting of the substrate.

High gloss finishes (Gardner Gloss of 65-95%) are obtained by water quenching. Air cooling results in finishes of 30 to 70% gloss.

Rilsan fine powders are available in a wide range of standard colors, as well as in custom colors matched to customer requirements.

Some applications will require the use of a primer prior to the application of the final Rilsan coating to assure proper adhesion and uniformity of coating thickness.

Rilsan RDP-17-1 is a water based, non-flammable dispersion of Nylon 11 coating powder which can be applied by employing wet-paint, air spray equipment.

For optimum results, it should be applied as is, without thinning with water or any commercial solvent which may alter the viscosity or other liquid characteristics.

The film thickness, which is dependent upon spraying conditions, is comparable to most commodity powder coating material. Film properties are similar to those achieved by depositing Nylon 11 by the conventional electrostatic technique.

Economics of Rilsan Powder Coating

The true value of a surface coating is a function of how well it performs the job for which it was originally considered.

For example, a coating which fails prematurely, but which costs half as much as a coating that protected the metal surface for the life of the part, would hardly be called a bargain.

One must therefore carefully consider performance in conjunction with cost.

Since powder coatings are sold by the pound, yet are used to cover surfaces, an expression of the relationship between cost and coverage must be made. This relationship is as follows:

Coverage (ft^2 * mil/lb.)	=	192 / Spec. Gravity
Cost/ft^2 * mil	=	Cost/lb. / Coverage

The specific gravity of Nylon 11 powders varies according to the pigment used. These variations are not too great since minimal levels of pigment are used.

Coverage rates per pound for Rilsan Nylon 11 coatings range from 160 square feet per mil thickness to 185 square feet per mil thickness. Whites and tint colors usually fall in the lower range, while black and mass-tone colors are on the higher scale.

Since Rilsan Nylon 11 is thermoplastic, it offers savings in processing time that are often sufficient to justify its use where thermoset materials are currently being applied at a lower per-pound cost. Nylon 11 does not require post-curing, as do thermoset materials.

The most accurate information on the economics of Nylon 11 powder coating is obtainable from a qualified custom coater. Rilsan representatives will be glad to offer recommendations.

PROPERTIES	RDP Pigmented Electrostatic
60° Gloss – air cooled	68
Coverage, Ft^2 * mil/Pound	162
Coverage, Ft^2 * mil/Gallon	-
Film Thickness – Minimum Mils	2.5
- Maximum Mils	7-8
ELECTRICAL:	
Dielectric Strength	1600 (7)
PHYSICAL:	
Melt Point °C	190
Specific Gravity	1.19
Bulk Density, Kilogram/Liter	0.39
Coefficient of Friction (2)	.32/.17
Tabor Abrasion (3)	17
Impact – Primed (4)	100
- Unprimed	100
Adhesion, Initial – Primed (5)	4.0
- Unprimed	2.0
Adhesion after 1 hour water boil	
- Primed – Rilprim P104	-
- Unprimed -	-
Adhesion After 3 hour water boil	
- Primed	4.0
- Unprimed	0
THERMAL:	
Coefficient of Thermal Expansion	
-30°C to +30°C, in./in. = 10^{-5}/°C	9.4
Heat of Fusion (of powder) cal/gm	8.5
APPROVALS	
USDA	Yes
CHEMICAL RESISTANCE: (6)	
Strong Alkalies	A
Strong Acids	X
Weak Acids	B
Grease, Oil	A
Commercial Solvents	A
Weathering	A

(1) Volts/Mil at 13 mils Film Thickness – ASTM D149 – Short Time Method
(2) Against Steel – Static/Dynamic
(3) Tabor Abrasion – mg Loss/1000 Cycles, CS-17 Wheel, 1000 g Load.
(4) Direct and Reverse, 160 in. lb. Gardner, -Electrostatic – 0.032" Thick Mild Steel Panel
(5) Rating Scale is: 4 – Excellent, 3 – Good, 2 – Fair, 1 – Poor and 0 – None
(6) Rating Scale: A – Good; B – Should be checked by application tests; X – Poor
(7) Volts/Mil at 6 mils Film Thickness – ASTM D149 Short Time Method
(8) Up to 50 mils Depending on Preheating Conditions

This Page Left Blank Intentionally

EP RUBBER

The cost of neoprene is its greatest disadvantage. It is a good multipurpose rubber, but there are other types that offer much better oil, ozone, weather, and oxidation resistance at a lower cost when they are used for specific applications.

EP Rubber (chemical identification: ethylene propylene and methylene – EPR, ethylene propylene and terpolymer – EPDM)

Two basic types of EP rubber are available in today's market. They are ethylene propylene (EP) which uses a peroxide cure system and ethylene propylene diene methylene terpolymer (EPDM) which uses a sulfur cure system. These polymers are recognized for their resistance to weathering and high temperatures. The EP rubbers have slightly better heat resistance than the EPDM rubbers; however, the EPDM rubbers are easier to process and manufacture.

EPDM rubbers are used extensively in outdoor applications. They will withstand the abuse of all types of weather including sunlight, ozone and oxidants, and they exhibit excellent resistance to animal and vegetable oils, water, steam, oxygenated solvents (acetone, methyl ethyl ketone and other ketones). Color retention in colored compounds is excellent. Compounds exhibit good dielectric qualities and high heat resistance. Low temperature properties are excellent.

The resilience and tensile strengths of EPDM rubbers are low, and resistance to petroleum derivatives is extremely poor.

Technical Data	EPDM (Ethylene Propylene)
Relative Cost (Ref Cost SBR = 1.00)	1.80
Specific Gravity – base Polymer	0.86
Durometer Hardness Range	30-90
Maximum Tensile Strength (PSI)	3000
Elongation % (Max)	600
Abrasion Resistance	G
Tear Resistance	G
Maximum Service Temp (Deg F)	300
Minimum Service Temp (Deg F)	-70
Oil Resistance	F,P
Fuel Resistance	F,P
Weather Aging	X
Oxidation	X
Heat Aging	X
Water Swell Resistance	X
Flame Resistance	P
Adhesion to Metal	G
Electrical Resistivity	X

X = Excellent G = Good F = Fair P = Poor

This Page Left Blank Intentionally

GALVANIZING

Quality of galvanizing will meet or exceed A.S.T.M. A-123-53 specifications.

1. SOIL AND GREASE REMOVAL
   A hot alkaline cleaner is usually used to remove oil, grease, shop oil, and soluble paints. This will not however, remove such things as epoxies, vinyls, asphalt, or welding slag. These soils must be removed by grit blasting, sandblasting, or other mechanical cleaning.

2. PICKLING
   An acid bath is used to remove surface rust and mill scale to provide a chemically clean metallic surface.

3. PREFLUXING
   A steel article may be immersed in a liquid flux predip (zinc ammonium chloride solution) to remove oxides and to prevent oxidation prior to dipping into molten zinc.

4. GALVANIZING
   The article is immersed into molten zinc at approximately 850° F (455° C) which may be covered with an additional kettle flux. This results in a formation of a zinc and zinc-iron alloy coating which is metallurigcally bonded to the steel.

5. FINISHING
   After the article is withdrawn from the galvanizing bath, excess zinc is removed by draining, by vibrating or, for small items, by centrifuging. The galvanized item is then cooled in air or quenched in water.

6. INSPECTION
   Thickness and surface condition inspections are the final steps in the process.

Main frame coating is crucial to the protection of the main frame. The metal shall be prepared by angular steel grit blasting to near white metal (SSPC-SP10). The base coating shall be hot dip galvanized to a thickness of at least five (5) mil. Galvanized surfaces shall be cleaned in accordance with SSPC-SP1 and passivated.

TABLE I

COMPARISON OF COATING WEIGHT REQUIREMENTS
FOR HOT DIP GALVANIZED PRODUCTS
(ASTM Specifications)

Class of Material	ASTM SPEC.	Minimum Weight of Zinc Coating, oz. per sq. ft. of surface[a]	
		Average of Specimens Tested[b]	Any Individual Specimen
Iron & Steel Products (Except Hardware & Related Products)			
Specified Base Metal Thickness, in. (mm)			
22 gage (0.0299)(0.76) to under 1/16 (1.6)	A123	1.10	0.85
1/16 (1.6) to under 1/8 (3.2)		1.50	1.25
1/8 (3.2) to under ¼ (6.4)		2.00	1.80
¼ (6.4) or over		2.30	2.00
For wire in assemblies (diameters):			
Under 3/16 (4.8)		1.00	0.75
3/16 (4.8) to under 1.4 (6.4)		1.50	1.25
1.4 (6.4) or over		2.00	1.80
HARDWARE			
Class A. – Castings: gray iron, malleable iron, steel	A153	2.00	1.80
Class B. – Rolled, pressed, and forged articles (except those that would be included under classes C and D)			
B-1. – 3/16 in. (4.76 mm) and over in thickness and over 15 in. (381 mm) in length……		2.00	1.80
B-2. – under 3/16 in. (4.76 mm) in thickness and over 15 in. (381 mm) in length……..		1.50	1.25
B-3. – 15 in. (381 mm) and under in length and any thickness…….		1.30	1.10
Class C. – Fasteners over 3/8 in. (9.52 mm) in diameter and similar articles. Washers 3/16 and 1/4 in. (4.76 and 6.35 mm) thick…….		1.25	1.00
Class D. – Fasteners (3.8 in. and under in diameter), rivets, nails, and similar articles. Washers under 3/16 in. (4.76 mm) thick……		1.00	0.85
HIGH-STRENGTH BOLTS (A325)	A153 Class C	1.25	1.00
TOWER BOLTS (A394)	A153 Class C	1.65	1.50

[a] In the case of long pieces, such as anchor rods and similar articles over 5 ft. in length, the weight of coating and uniformity test shall be the average of the determination made at each end and the middle of the article. In no case shall the average of the measurements in any of the three areas be below the minimum shown in the " Any Individual Specimen" column.

[b] The number of specimens to be tested per order shall be as specified in ASTM A123, the product specification, or as specified by the purchaser.

TABLE II
CONVERSION FROM ZINC COATING WEIGHT TO COATING THICKNESS

Coating Weight			
Surface Oz/Ft^2	Surface g/m^2	Thickness Mils*	Thickness *u*m (microns)
1.00	305.2	1.70	43
1.10	335.7	1.87	47
1.25	381.5	2.12	54
1.30	396.8	2.21	60
1.50	457.8	2.55	65
1.80	549.4	3.06	77
2.00	610.3	3.40	86
2.50	762.9	4.25	108
3.00	915.5	5.10	130
* 1 mil = 0.001 inches			

TABLE III
COMPARISON OF THE COATING MASS REQUIREMENTS
FOR HOT DIP GALVANIZED PRODUCTS
(CSA SPECIFICATION G164-M)

Classification of Material	Minimum Mass of Zinc Coating g/m^2	Equivalent Minimum Thickness[1] um (microns)
1. Castings; Iron and Steel	550	78
2. Rolled, Drawn, Pressed and Forged Steel Articles (except Classifications 3, 4 and 5 listed below)		
1 mm and up to but not including 2 mm	260	37
2 mm and up to but not including 3 mm	400	57
3 mm and up to but not including 4 mm	500	71
4 mm and up to but not including 5 mm	560	80
5 mm thick and heavier	610	87
3. Screws, Bolts, Nuts, Rivets, Nails and similar fasteners 10 mm and under in diameter Washers 5 to 6 mm thick	260	37
4. Screws, Bolts, Nuts, Rivets, Nails and similar fasteners over 10 mm and up to 12 mm diameter Washers 5 to 6 mm thick	300	42
5. Bolts, Nuts, and Threaded Fasteners over 12 mm diameter Washers Over 6 mm thick	460	65

NOTES:
(1) Based upon mathematical calculations, 100 g of zinc per square meter of surface corresponds to a coating thickness of 14.3 *u*m.
(2) In the case of products galvanized after being assembled from various material classifications listed in Table III, the coating mass of each class shall be as shown in Table III.

This Page Left Blank Intentionally

TAB 11

This Page Intentionally Left Blank

Style # HF7-7041

Filter Fabric Specifications

Fiber :	**Polyester***
Color :	**White**
Count :	**64 X 24 (per inch)**
Weave :	**6 X 2 Modified Satin**
Warp Diameter :	**500 Microns**
Weft Diameter :	**800 Microns**
Weight :	**38.9 (oz. per square yard)**
Tensile Strength :	**1560 (lbs/inch)**
Air Permeability :	**385 CFM**
Water Permeability :	**345 (mm3/mm2/S)**
Thickness :	**.083”**
Micron Opening :	**0 X 325**
Micron Retention :	**260**
Open Area :	**19%**

***** **Constructed of special polyester monofilaments that have propriety additives offering enhanced cake release and resistance to abrasion.**

Recommended range of belt tensioning is 12-35 PLI with the recommended belt tension being 17 PLI.

Operate filter belt (bottom) 10-15 psi higher than milling belt (top)

This Page Intentionally Left Blank

TAB 12

This Page Intentionally Left Blank

POLYMER INJECTION POINT LOCATION IN SLUDGE PIPING SYSTEM

General Notes

Customer and Engineer are advised that the performance of the dewatering equipment is affected by the location of the polymer injection point.

Final location of the polymer injection point and mixer assembly can only be determined based upon actual testing of the dewatering system. Due to the variability of process parameters in any installation, Charter Machine recommends provisions be made in the sludge feed piping to allow location of the polymer injection points and mixer assembly at the following locations:

a. Approximately 15 to 20’ prior to the inlet of the dewatering equipment.
b. Approximately 30 to 40’ prior to the inlet of the dewatering equipment.
c. Approximately 45 to 60’ prior to the inlet of the dewatering equipment .
d. If practical, at the sludge pump inlet.

A 6” flanged polymer mixer assembly will be supplied. The mixer assembly is 19” long. The mixer assembly should be located at a convenient point in the sludge line, where a flanged connection would typically be installed.

Charter Machine requests that the polymer feed line be plumbed to each of the potential polymer injection points and that a ball valve be installed at each injection point. Upon start-up, the polymer injection ring and mixer assembly shall be moved to determine the best location for polymer application and the amount of mixing required for the particular sludge. Any unused polymer injection locations can be isolated from the sludge line and used as polymer sampling ports if so desired.

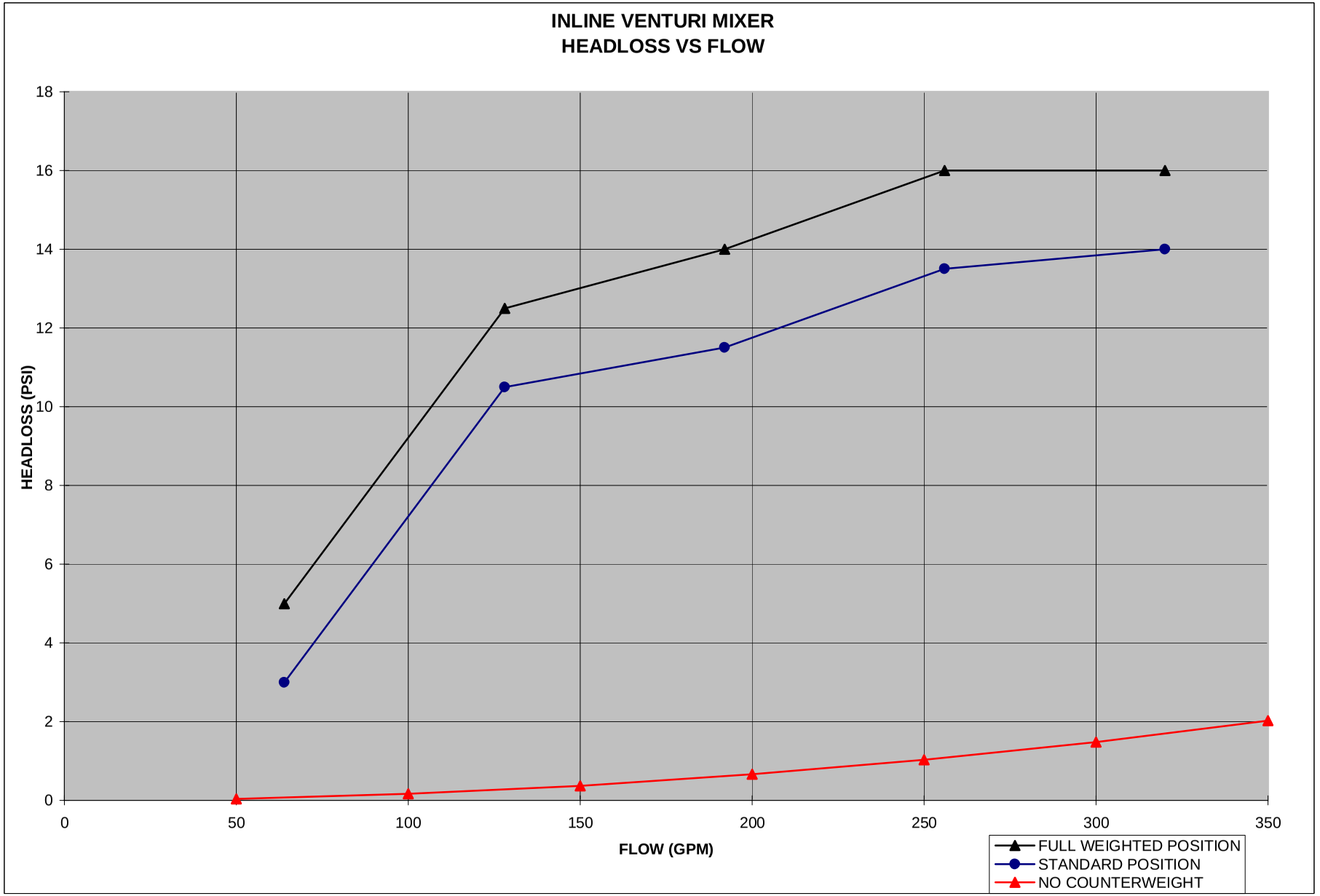
INLINE VENTURI MIXER
HEADLOSS VS FLOW
HEADLOSS (PSI)
18
16
14
12
10
8
6
4
2
0
0
50
100
150
200
250
300
350
FLOW (GPM)
FULL WEIGHTED POSITION
STANDARD POSITION
NO COUNTERWEIGHT

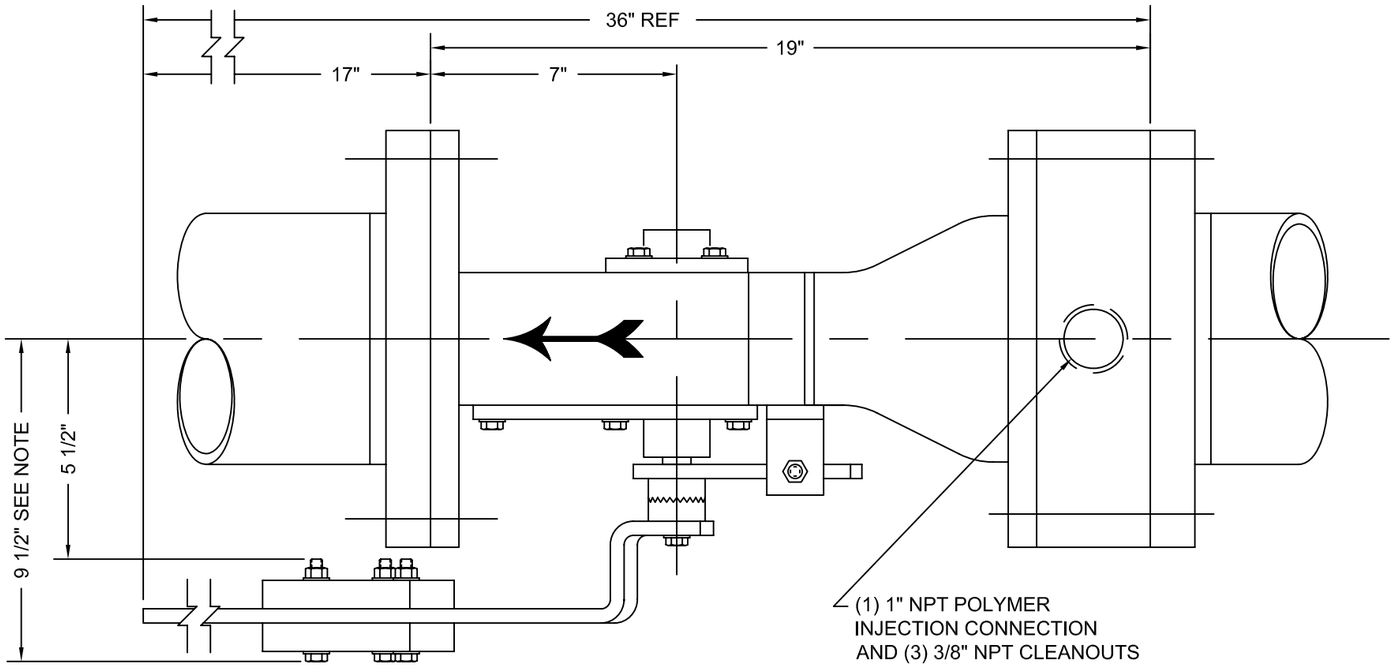

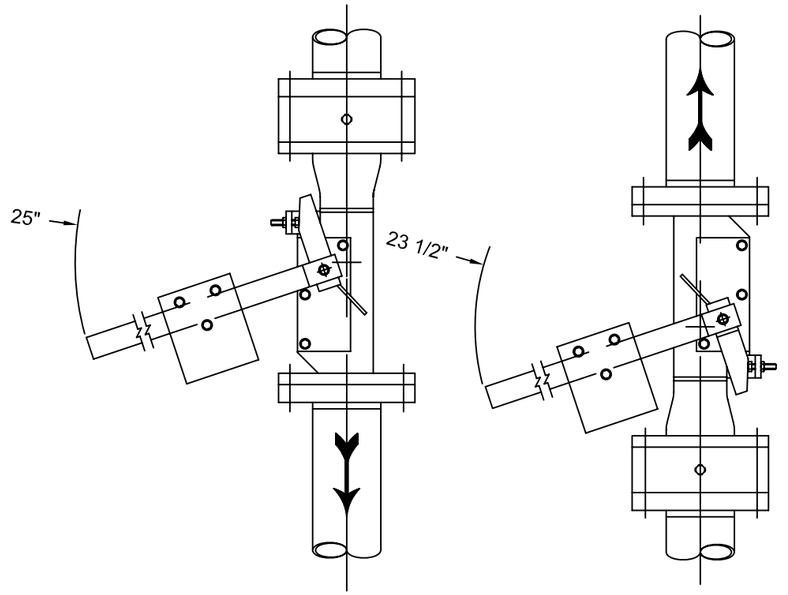

DOWNWARDS
FLOW
MOUNTING
CLEARANCE

UPWARDS
FLOW
MOUNTING
CLEARANCE

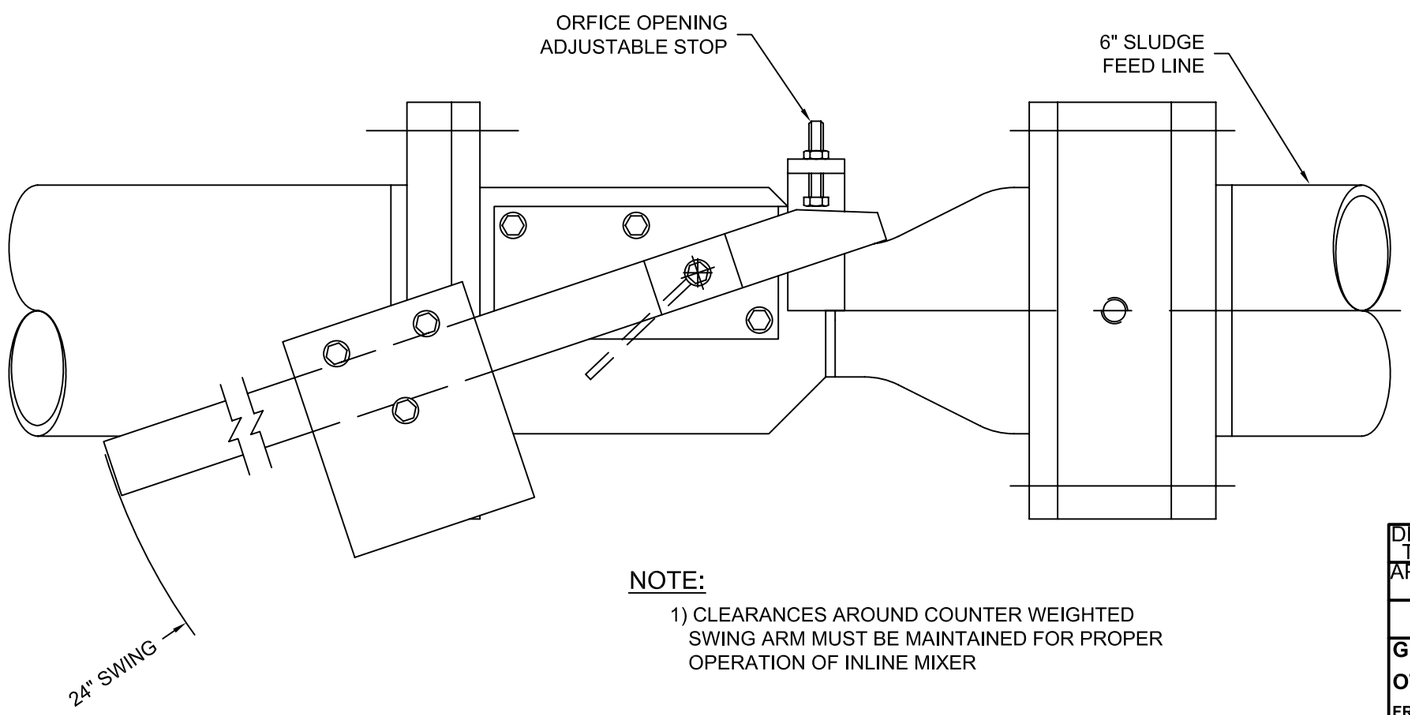

NOTE:

1) CLEARANCES AROUND COUNTER WEIGHTED SWING ARM MUST BE MAINTAINED FOR PROPER OPERATION OF INLINE MIXER

DRAWN TMP	8/21/06
APPROVED	

G.E.C. TOLERANCES UNLESS OTHERWISE SPECIFIED

FRACTIONAL DIM ±1/64
DECIMAL DIM ±.005
ANGLE ± 1/2
SURFACE FINISH 125

CHARTER MACHINE COMPANY
55 WESTER AVE METUCHEN N.J. 08840

TITLE
6" INLINE MIXER
MACHINE VIEWS

SIZE		DWG NO.	REV
B		TP00.4-B-031	0

SCALE 1:4 SHEET 1 OF 1

This Page Left Blank Intentionally

Parts List				
ITEM	QTY	DESCRIPTION	MATERIAL	WEIGHT (LBS)
1	1	PLATE- 3" X 11" DIA	UHMW	6.0

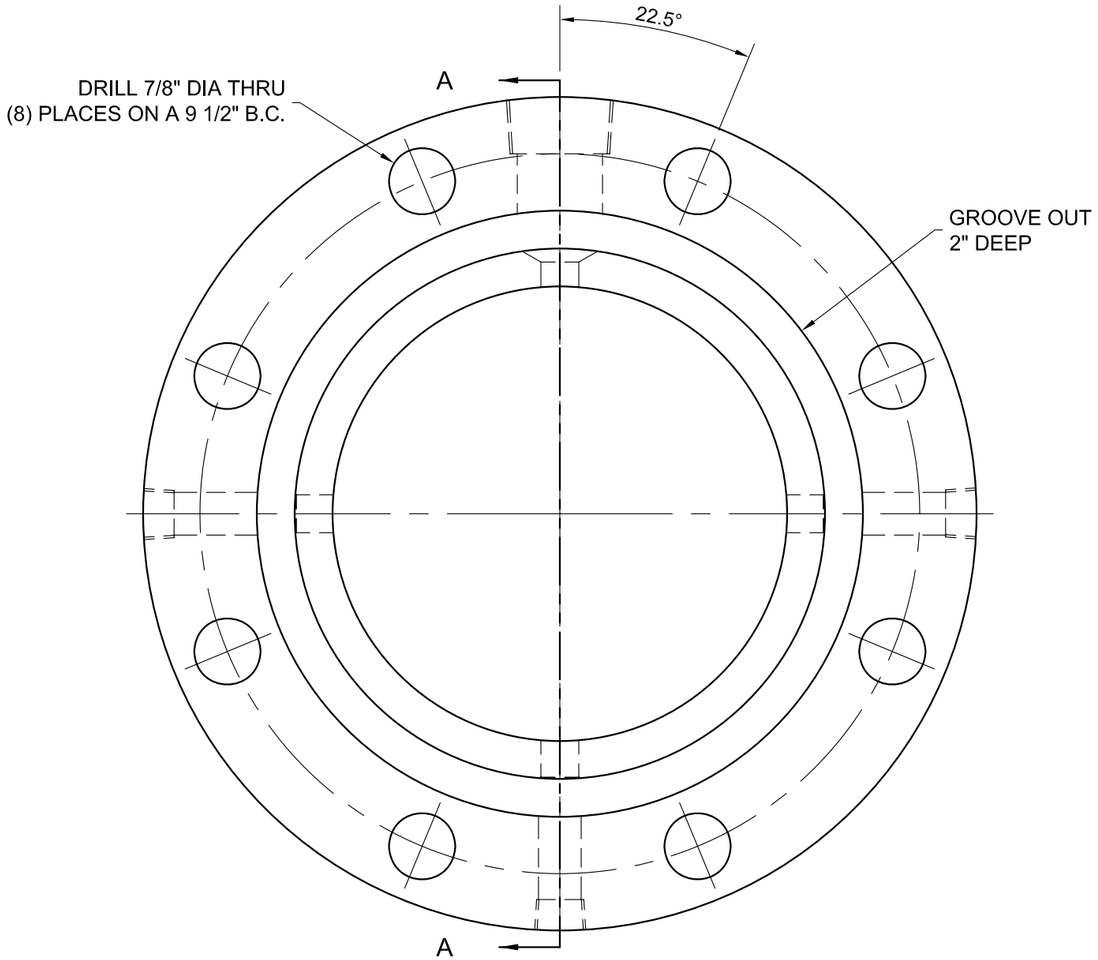

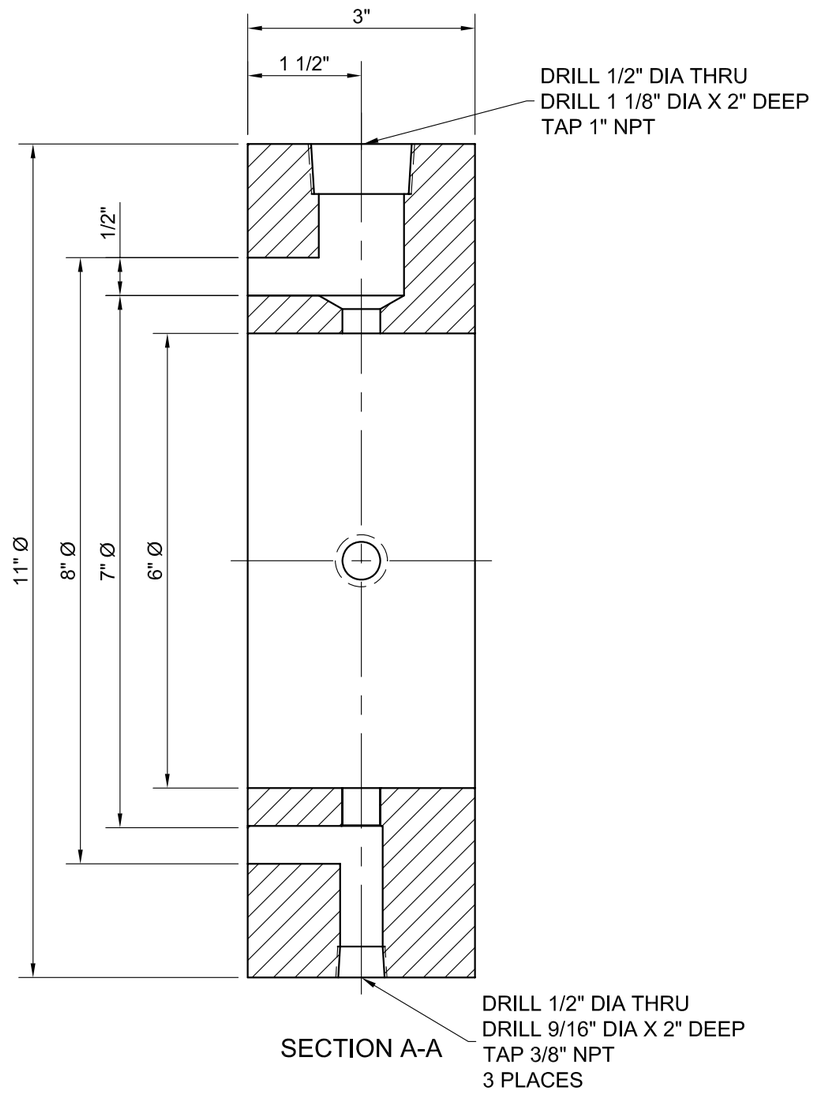

GENERAL NOTES:
1. BREAK ALL SHARP EDGES AND REMOVE ALL BURRS.

DRAWN TMP	8/21/06	CHARTER MACHINE COMPANY 55 WESTER AVE METUCHEN N.J. 08840
APPROVED		
		TITLE 6" INLINE MIXER POLYMER INJECTION RING
G.E.C. TOLERANCES UNLESS OTHERWISE SPECIFIED FRACTIONAL DIM ±1/64 DECIMAL DIM ±.005 ANGLE ± 1/2 SURFACE FINISH 125		SIZE B | DWG NO. TP00.4-B-014 | REV 0 SCALE 1:4 | SHEET 1 OF 1

This Page Left Blank Intentionally

TAB 13

This Page Intentionally Left Blank

CHARTER MACHINE COMPANY SUMMARIZED BILL OF MATERIAL

REQ QTY	PARENT ITEM# DESCRIPTION
1	770 IOWA CITY, IOWA
	3BTP22.93

COMPONENT ITEM NUMBER	COMPONENT DESCRIPTION/COMMENT	QTY REQUIRED	UM
#1492-HM1	TERMINAL BLOCK ALLEN-BRADLEY	80	EA
#1492-N22	TERMINAL BLOCK RIGID MTG RAIL	3	EA
	ALLEN-BRADLEY EACH(3FT PIECE)		
#1492-N23	TERMINAL BLOCK END ANCHOR	4	EA
	ALLEN-BRADLEY		
#1492-NM36	TERMINAL BLOCK END BARRIER	2	EA
	ALLEN-BRADLEY		
#199-DR1	A-B DIN MOUNTING RAIL	3	EA
1766-L32AWAA	AB MICROLOGIX 1400 PLC	1	EA
	32 I/O W/ ANALOG		
1762-IA8	AB MICROLOGIX 120VAC	1	EA
	8 INPUT MODULE		
1762-OW8	AB MICROLOGIX 120VAC	1	EA
	8 OUTPUT MODULE		
1762-IF4	AB MICROLOGIX ANALOG	1	EA
	INPUT MODULE		
1762-OF4	AB MICROLOGIX ANALOG	1	EA
	OUTPUT MODULE		
3RT1016-1AK61	SIEMENS 5 HP, 9 AMP IEC CONTACTOR	1	EA
	120VAC COIL		
3RU1116-1DB0	SIEMENS IEC OVERLOAD	1	EA
	2.2-3.2A		
#B075BTZ13JK	MICRON CONTROL TRANSFORMER	1	EA
	75 VA		
#B750BTZ13JKF	MICRON CONTROL TRANSFORMER	1	EA
	750 VA		
#PLT-SEC-T3-120-FM	PHOENIX SURGE ARRESTER 2905228	1	EA
	120VAC		
03400073A	CONTROL TECHNIQUES M200	1	EA
	DRIVE 480VAC, 3HP		
03400094A	CONTROL TECHNIQUES M200	1	EA
	DRIVE 480VAC, 7.5HP		
#TS3N030TW-U4	ABB 30 AMP 3 POLE CIRCUIT	1	EA
	BREAKER 480 VAC W/UV RELEASE		
#MKCT4	ABB DISC MECHANISM	1	EA
	FOR BREAKER		
#OXC1L48	ABB CABLE	1	EA
	FOR BREAKER		
#OHF1C4	ABB DISC HANDLE MECHANISM NEMA 4X	1	EA
	FOR BREAKER		
#MPDB67563	MERSEN 1(2/0-14GA)IN 6(2-14GA)OUT	1	EA
	3 POLE DIST. BLOCK 175AMP		
#MPDBC6667	MERSEN MEDIUM	3	EA
	PDB COVER		
#ATDR-1/2	FERRAZ SHAWMUT CLASS CC FUSE	2	EA
	1/2 AMP		

CHARTER MACHINE COMPANY SUMMARIZED BILL OF MATERIAL

REQ QTY	PARENT ITEM#	DESCRIPTION
1	770 IOWA CITY, IOWA	
	3BTP22.93	

COMPONENT ITEM NUMBER	COMPONENT DESCRIPTION/COMMENT	QTY REQUIRED	UM
#ATDR-1	FERRAZ SHAWMUT CLASS CC FUSE	1	EA
	10 AMP		
#ATDR-3	FERRAZ SHAWMUT CLASS CC FUSE	2	EA
	3 AMP		
#ATDR-5	FERRAZ SHAWMUT CLASS CC FUSE	5	EA
	5 AMP		
ATDR-10	FERRAZ SHAWMUT CLASS CC FUSE	1	EA
	10 AMP		
#ATDR-15	FERRAZ SHAWMUT CLASS CC FUSE	6	EA
	15 AMP		
#CS8-40E-120	SPRECHER & SCHUH RELAY	1	EA
	120VAC		
#LPSC001ID	LIT 1POLE CLASS CC FUSE HOLDER	4	EA
	LIGHTED		
#LPSC002ID	LIT 2POLE CLASS CC FUSE HOLDER	2	EA
	LIGHTED		
#LPSC003ID	LIT 3POLE CLASS CC FUSE HOLDER	3	EA
	LIGHTED		
#AJT40	FERRAZ SHEAWMUT CLASS JJ FUSE	3	EA
	40AMP		
#LPSJ60-3ID	LIT 3POLE CLASS J FUSE HOLDER	1	EA
	60 AMP		
#RH3B-UL120AC	IDEC 3PDT ICECUBE RELAY	9	EA
	120V W IND		
#SH3B-05	IDEC RELAY SOCKET 3PDT	9	EA
	DIN RAIL MOUNT		
#1595	PASS & SEYMOUR 115VAC 15A DUPLEX	1	EA
	RECEPTACLEW/ COVER		
#E980DFN	CARLON PVC FSE BOX	1	EA
	1 HOLE 1/2"		
#S8VSK-G01524	OMRON 24VDC POWER	1	EA
	SUPPLY		
#IES-150B	INDUSTRIAL ETHERNET	1	EA
	SWITCH		
#C2LG6	PANDUIT WIRE WAY COVER 2"	5	EA
	(6FT PIECE)		
#C3LG6	PANDUIT WIRE WAY COVER 3"	1	EA
	(6FT PIECE)		
#E2X3LG6	PANDUIT WIRE WAY 2" X 3"	5	EA
	(6FT PIECE)		
#E3X3LG6	PANDUIT WIRE WAY 3" X 3"	1	EA
	(6 FT PIECE)		
#876-N5	EDWARDS ALARM HORN	1	EA
	WEATHERPROOF 120VAC		
ABD111N-B	IDEC PUSHBUTTON BLACK FLUSH HEAD	2	EA
	1NO1NC		

CHARTER MACHINE COMPANY SUMMARIZED BILL OF MATERIAL

REQ QTY	PARENT ITEM#	DESCRIPTION
1	770 IOWA CITY, IOWA	
	3BTP22.93	

COMPONENT ITEM NUMBER	COMPONENT DESCRIPTION/COMMENT	QTY REQUIRED	UM
ABD110N-S	IDEC PUSHBUTTON BLUE FLUSH HEAD	1	EA
	1NO		
APD199DN-W-120	IDEC PILOT LIGHT WHITE	1	EA
	120VAC		
ASD211N	IDEC SELECTOR SWITCH 2 POSITION	1	EA
	1NO1NC		
AVD311NR	IDEC MUSH HEAD RED TWIST TO RELEASE	1	EA
	1NO1NC		
BST-001	IDEC CONTACT BLOCK	1	EA
	1NC		
#NAME TAG	CUSTOM ENGRAVED NAME	3	EA
	TAG SEE DRAWING FOR LEGEND		
800H-W100E*004	ENGRAVED LEGEND "SILENCE" 30 MM	1	EA
	WHITE LETTERS BLACK BACKGROUND		
800T-X646	YELLOW BLANG "EMERG STOP" 30 MM	1	EA
800H-W117	ENGRAVED LEGEND "ON" 30 MM	1	EA
	WHITE LETTERS BLACK BACKGROUND		
800H-W121	ENGRAVED LEGEND "RESET" 30 MM	1	EA
	WHITE LETTERS BLACK BACKGROUND		
800H-W133	ENGRAVED LEGEND "OFF ON" 30 MM	1	EA
	WHITE LETTERS BLACK BACKGROUND		
800H-W100E*023	ENGRAVED LEGEND "CB-A RESET" 30 MM	1	EA
	WHITE LETTERS BLACK BACKGROUND		
#2711P-T10C21D8S	ALLEN-BRADLEY PANEL VIEW PLUS 7	1	EA
	MODEL 1000		
#2711P-RSACDIN	ALLEN-BRADLEY POWER SUPPLY	1	EA
	28VDC		
#1784-SD1	ALLEN-BRADLEY SD CARD	1	EA
	1GB		
#H7ET-N-B	SELF POWERED TIMER COUNTER	2	EA
	NEMA 4 NON OR FRONT RESET SELC		
#SCE60XEL3712SSLP	SAGINAW 60 X 37 X 12 NEMA 4X SS	1	EA
	ENCLOSURE		
#SCE-60P36	SAGINAW 57X33 SUBPANEL	1	EA
#FKD001	CMC 12X12 SS FLOOR STAND KIT	1	EA
#CB-RESET-TAG	CIRCUIT BREAKER RESET TAG	1	EA
#44214	460 VOLT RED LABEL	1	EA
	1-1/8 IN X 4-1/2 IN		
#80026	ARC FLASH AND SHOCK HAZARD STICKER	1	EA
	3-1/2 IN X 5 IN		
#L123F	CAUTION LABEL	1	EA
	MULTIPLE POWER SOURCES		
#PESW-D-1	ISO TRIANGLE WARNING LABEL	1	EA

This Page Left Blank Intentionally

Rockwell Automation [+ Worldwide]

POWERED BY Google Search

Sign In | Become a Member

About Us | News & Events | Products | Services & Support | Industries & Solutions | LISTEN. THINK. SOLVE.®

Allen-Bradley

Terminal Blocks, NEMA/EEMAC

- Terminal Blocks, NEMA/EEMAC Overview
- NEMA/EEMAC Terminal Blocks
- Finger-Safe Terminal Blocks
- Panel Mount Blocks
- NEMA Terminal Block Accessories

Catalogs > Industrial Controls Catalog > Terminal Blocks and Wiring Systems > Terminal Blocks, NEMA/EEMAC > Finger-Safe Terminal Blocks

FINGER-SAFE TERMINAL BLOCKS

Introduction | High Density Blocks | Fuse and Surge Suppressor Blocks | Resistor, Voltage Indicating, and Component Blocks | Short-Circuit Current Ratings

High Density Blocks

	1492-HM1	1492-HM2	1492-HM3
Dimensions are not intended to be used for manufacturing purposes. **Note:** Height dimension is measured from top of rail to top of terminal block.	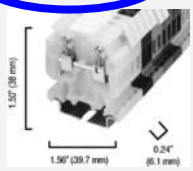	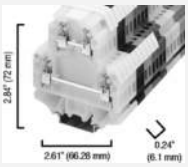	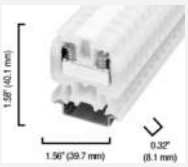
Specifications	*Finger-Safe terminal block, single-circuit, multi-rail mount.*	*Finger-Safe terminal block, two-circuit, multi-rail mount.*	*Finger-Safe terminal block, single-circuit, multi-rail mount.*
Approvals	/CSA/CE	/CSA/CE	/CSA/CE
Voltage Rating	600V AC/DC	600V AC/DC	600V AC/DC
Maximum Current	30 A	24 A [IEC: 30 A]	55 A [IEC: 57 A]
Wire Range (Rated Cross Section)	#30...#12 AWG (0.05...4 mm2)	#30...#12 AWG (0.05...4 mm2)	#22...#8 AWG (0.5...10 mm2)
Wire Strip Length	0.38 in. (9.7 mm)	0.38 in. (9.7 mm)	0.38 in. (9.7 mm)
Recommended Tightening Torque	3...7 lb-in. (0.3...0.8 N•m)	3...7 lb-in. (0.3...0.8 N•m)	8...16 lb-in. (0.9...1.8 N•m)
Density	50 pcs./ft (164/m)	50 pcs./ft (164/m)	37 pcs./ft (123/m)
Insulation Temperature Range	–40...+221°F (–40...+105°C)	–40...+221°F (–40...+105°C)	–40...+221°F (–40...+105°C)

Terminal Blocks	Cat. No.	Pcs./Pkg.	Cat. No.	Pcs./Pkg.	Cat. No.	Pcs./Pkg.
Color:White	1492-HM1	80	1492-HM3	50	1492-HM3	50
Color:Gold	1492-HM1GL	80	1492-HM2GL	50	—	—
Color:Red	1492-HM1RE	80	1492-HM2RE	50	1492-HM3RE	50
Color:Blue	1492-HM1B	80	1492-HM2B	50	1492-HM3B	50
Color:Black	1492-HM1BL	80	1492-HM2BL	50	1492-HM3BL	50

Color:Green	1492-HM1G	80	1492-HM2G	50	1492-HM3G	50
Color:Yellow	1492-HM1Y	80	1492-HM2Y	50	1492-HM3Y	50
Color:Brown	1492-HM1BR	80	1492-HM2BR	50	1492-HM3BR	50
Color:Violet	1492-HM1VT	80	1492-HM2VT	50	1492-HM3VT	50
Color:Grey	1492-HM1GY	80	1492-HM2GY	50	1492-HM3GY	50
Color:Orange	1492-HM1OR	80	1492-HM2OR	50	1492-HM3OR	50
Accessories (Accessories)	**Cat. No.**	**Pcs./Pkg.**	**Cat. No.**	**Pcs./Pkg.**	**Cat. No.**	**Pcs./Pkg.**
Mounting Rails: A-B Rail	1492-N1	20	1492-N1	20	1492-N1	20
3 ft Rigid A-B Rail	1492-N22	20	1492-N22	20	1492-N22	20
3 ft High-Rise A-B Rail	1492-N44	2	—	—	1492-N44	—
Standoff Brackets (use every 12 in.)	1492-N25	2	1492-N25	2	1492-N25	2
DIN Rail	199-DR1	10	199-DR1	10	199-DR1	10
1 m Symmetrical DIN (Aluminum)	1492-DR5	10	1492-DR5	10	1492-DR5	10
1 m Hi-Rise Sym. DIN (Aluminum)	1492-DR6	2	1492-DR6	2	1492-DR6	2
1 m Angled Hi-Rise Sym. DIN (Steel)	1492-DR7	2	1492-DR7	2	1492-DR7	2
End Barrier	1492-NM36	50	1492-NM40	50	1492-NM36	50
End Anchors: A-B Rail	1492-N23	10	1492-N23	10	1492-N23	10
A-B Rail — Normal Duty	1492-N47	50	—	—	1492-N47	50
A-B Rail — Retaining Clip — Light Duty	1492-N2	50	—	—	—	—
DIN Rail — Normal Duty	1492-EA35	50	1492-EA35	50	1492-EA35	50
DIN Rail — Heavy Duty	1492-EAH35	10	1492-EAH35	10	1492-EAH35	10
Color:=26,1165366	1492-N42	50	1492-N42	50	—	50
Color:=23,1165366	1492-SJ8-10	10	1492-SJ6-10	10	1492-SJ8-10	10
50-pole Uninsulated	1492-N39	10	1492-N39	10	—	—
Insulating Sleeve	1492-SJS	10	1492-SJS	10	—	—
Marking System	1492-	5	1492-	5	1492-	5

	MN81		MN81		MN81	

High Density Blocks

	1492-H1		1492-H2	
Dimensions are not intended to be used for manufacturing purposes. **Note:** Height dimension is measured from top of rail to top of terminal block.	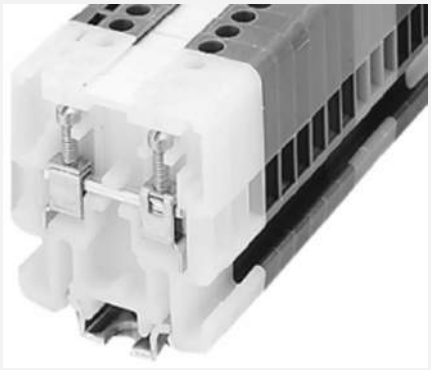		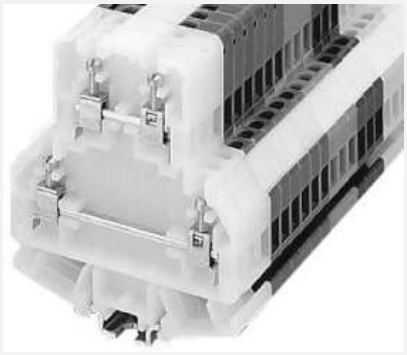	
Specifications	*Finger-Safe terminal block, single-circuit, screw with pressure plate*		*Finger-Safe terminal block, two-circuit, screw with pressure plate.*	
Approvals	/CSA/CE		/CSA/CE	
Voltage Rating	600V AC/DC		600V AC/DC	
Maximum Current	30 A		24 A [IEC: 30 A]	
Wire Range (Rated Cross Section)	#30...#12 AWG (0.05...4 mm2)		#30...#12 AWG (0.05...4 mm2)	
Wire Strip Length	0.38 in. (9.7 mm)		0.38 in. (9.7 mm)	
Recommended Tightening Torque	3...7 lb-in. (0.3...0.8 N•m)		3...7 lb-in. (0.3...0.8 N•m)	
Density	50 pcs./ft (164/m)		50 pcs./ft (164/m)	
Insulation Temperature Range	–40...+221°F (–40...+105°C)		–40...+221°F (–40...+105°C)	
Terminal Blocks	**Cat. No.**	**Pcs./Pkg.**	**Cat. No.**	**Pcs./Pkg.**
Color:White	1492-H1	80	1492-H2	50
Color:Gold	1492-H1GL	80	1492-H2GL	50
Color:Red	1492-H1RE	80	1492-H2RE	50
Color:Blue	1492-H1B	80	1492-H2B	50
Color:Black	1492-H1BL	80	1492-H2BL	50
Color:Green	1492-H1G	80	1492-H2G	50
Color:Yellow	1492-H1Y	80	1492-H2Y	50
Color:Brown	1492-H1BR	80	1492-H2BR	50
Color:Violet	1492-H1VT	80	1492-H2VT	50
Color:Gray	1492-H1GY	80	1492-H2GY	50
Color:Orange	1492-H1OR	80	1492-H2OR	50
Accessories (Accessories)	**Cat. No.**	**Pcs./Pkg.**	**Cat. No.**	**Pcs./Pkg.**

Mounting Rails: A-B Rail	1492-N1	20	1492-N1	20
3 ft Rigid A-B Rail	1492-N22	20	1492-N22	20
3 ft High-Rise A-B Rail	1492-N44	2	1492-N44	2
Standoff Brackets (use every 12 in.)	1492-N25	2	1492-N25	2
DIN Rail	—	—	—	—
1 m Symmetrical DIN (Aluminum)	—	—	—	—
1 m Hi-Rise Sym. DIN (Aluminum)	—	—	—	—
1 m Angled Hi-Rise Sym. DIN (Steel)	—	—	—	—
End Barrier	1492-N36	50	1492-N40	50
End Anchors: A-B Rail	1492-N23	10	1492-N23	10
A-B Rail — Normal Duty	1492-N47	50	—	—
A-B Rail — Retaining Clip — Light Duty	1492-N2	50	—	—
DIN Rail — Normal Duty	—	—	—	—
DIN Rail — Heavy Duty	—	—	—	—
Side Jumpers:2-Pole uninsulated	1492-N42	50	1492-N42	50
10-Pole uninsulated	1492-SJ6-10	10	1492-SJ6-10	10
50-pole Uninsulated	1492-N39	10	1492-N39	10
Insulating Sleeve	1492-SJS	10	1492-SJS	10
Marking Systems	1492-N41	50	1492-N41	50

Copyright © 2009 Rockwell Automation, Inc. All Rights Reserved.

LISTEN. THINK. SOLVE.®

PRODUCT PROFILE

No PLC shall be provided. See other comments.
-ZMC/SCI 20170816

MicroLogix™ 1400 / 1766

Small Programmable Logic Controller

Advantages

- Expand your application capabilities with up to 7 expansion I/O modules for a maximum of 144 discrete I/O
- Up to 6 embedded 100 kHz high-speed counters (on controllers with dc inputs)
- 2 Serial ports with DF1/ DH485/Modbus RTU/DNP3/ASCII protocol support
- Ethernet port provides you with peer-to-peer messaging, web server and email capabilities
- Built-in LCD with backlight allows you to view controller and I/O status, and provides a simple interface for messages, bit / integer monitoring and manipulation

Target Applications

- *General Industrial Machinery (Material Handling, Packaging, Assembly, etc.)*
- *HVAC/Building Automation*
- *SCADA (Oil & Gas, Water/Waste Water, and Electric Power)*
- *Food & Beverage*
- *Pharmaceutical*
- *Commercial Machinery (Vending, Industrial Washers & Dryers, etc.)*

Overview

The new Allen-Bradley® MicroLogix™ 1400 from Rockwell Automation complements the existing MicroLogix family of small programmable logic controllers. MicroLogix 1400 combines the features you demand from MicroLogix 1100, such as EtherNet/IP, online editing, and a built-in LCD, plus provides you with enhanced features, such as: higher I/O count, faster High Speed Counter/PTO and enhanced network capabilities

Take advantage of the built-in LCD with back lighting to set the Ethernet network configuration, display floating point values on a user configurable display, display OEM logos at startup and read or write any binary, integer and long file elements in the data table. Controllers without embedded analog come with 32 digital I/O count, while analog versions have 32 digital I/O and 6 analog I/O. All versions can be expanded using up to seven 1762 I/O modules - the same I/O modules that MicroLogix 1100 and 1200 utilize.

Three embedded communication ports provide you with superior communications capabilities. MicroLogix 1400 offers an isolated RS232C/RS485 combination port; a non-isolated RS232C port; and an RJ-45 port for 10/100 Mbps EtherNet/IP peer-to-peer messaging.

Similar to the rest of the MicroLogix family, MicroLogix 1400 is programmed with RSLogix 500 programming software (Version 8.1 and above) as well as new RSLogix Micro programming software.

SPECIFICATIONS

MicroLogix	1766-L32BWA	1766-L32AWA	1766-L32BXB	1766-L32BWAA	1766-L32AWAA	1766-L32BXBA
Input Power	120/240 VAC		24 VDC	120/240 VAC		24 VDC
Memory	non-volatile battery backed RAM					
User Program / User Data Space	10 K / 10K configurable					
Data Logging / Recipe Storage	128 K (without Recipe) / up to 64 K (after subtracting Data Logging)					
Battery Back-up	Yes					
Back-up Memory Module	Yes					
Digital Inputs	(12) Fast 24VDC (8) Normal 24VDC	(20) 120VAC	(12) Fast 24VDC (8) Normal 24VDC	(12) Fast 24VDC (8) Normal 24VDC	(20) 120VAC	(12) Fast 24VDC (8) Normal 24VDC
Digital Outputs	(12) Relay	(12) Relay	(6) Relay (3) Fast DC (3) Normal DC	(12) Relay	(12) Relay	(6) Relay (3) Fast DC (3) Normal DC
Analog Inputs / Outputs	None			(4) Voltage Inputs / (2) Voltage Outputs		
Serial Ports	(1)RS232C/RS485*, (1)RS232C**					
Serial Protocols	DF1 Full Duplex, DF1 Half Duplex Master/Slave, DF1 Radio Modem, DH-485, Modbus RTU Master/Slave, ASCII, DNP 3 Slave					
Ethernet Ports	(1) 10/100 EtherNet/IP port					
Ethernet Protocols	EtherNet/IP messaging only					
Trim Potentiometers	2 Digital					
High-Speed Inputs	Up to 6 channels @ 100 kHz	N/A	Up to 6 channels @ 100 kHz	Up to 6 channels @ 100 kHz	N/A	Up to 6 channels @ 100 kHz
Real Time Clock	Yes, embedded					
PID	Yes (limited by loop and stack memory)					
PWM /PTO	N/A		3 channel PTO (100kHz)\PWM (40kHz)	N/A		3 channel PTO (100kHz)\PWM (40kHz)
Dual Axis Servo control	N/A		Through embedded PTO	N/A		Through embedded PTO
Embedded LCD	Yes					
Floating Point Math	Yes					
Online Editing	Yes					
Operating Temperature	-20 °C to +60 °C					
Storage Temperature	-40 °C (or -30 °C) to +85 °C					

* Isolated. RS232/RS485 combo port. Same as MicroLogix 1100 Comm 0

** Non-isolated RS232. standard D-sub connector.

www.rockwellautomation.com

Power, Control and Information Solutions Headquarters

Americas: Rockwell Automation, 1201 South Second Street, Milwaukee, WI 53204 USA, Tel: (1) 414.382.2000, Fax: (1) 414.382.4444

Europe/Middle East/Africa: Rockwell Automation, Vorstlaan/Boulevard du Souverain 36, 1170 Brussels, Belgium, Tel: (32) 2 663 0600, Fax: (32) 2 663 0640

Asia Pacific: Rockwell Automation, Level 14, Core F, Cyberport 3, 100 Cyberport Road, Hong Kong, Tel: (852) 2887 4788, Fax: (852) 2508 1846

Publication 1766-PP001A-EN-P – July 2008

Copyright ©2008 Rockwell Automation, Inc. All Rights Reserved. Printed in USA.

Expansion I/O Modules

MicroLogix 1200 I/O expansion modules provide superior functionality at a low cost. With a variety of modules, they complement and extend the capabilities of the MicroLogix 1200 controllers by maximizing flexibility of the I/O count and type.

MicroLogix 1200 I/O has a modular, rackless design. Elimination of the I/O rack from the system enhances cost savings and reduces replacement parts inventory.

The MicroLogix I/O package design allows modules to be either DIN rail or panel mounted. The DIN latches and screw mounting holes are an integral part of the package design.

Features:

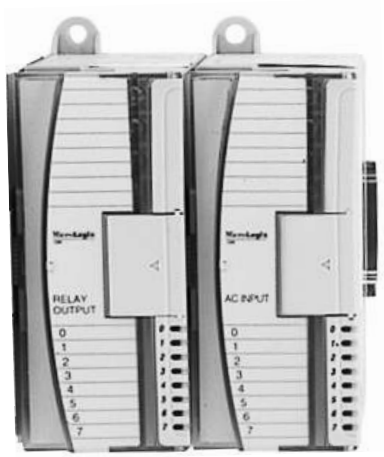

- Rackless design, eliminating added system costs and inventory
- Small footprint, shrinking panel space requirements
- Integral high-performance I/O bus
- Software keying to prevent incorrect positioning within the system
- Feature-rich I/O functionality addresses a wide range of applications
- AC/DC relay, 24V dc, and 120V ac voltages

Available modules include:

1762-IA8	8 point 120V ac Input Module
1762-IQ8	8 point 24V dc Sinking/Sourcing Input Module
1762-OW8	8 point ac/dc Relay Output Module
1762-IF2OF2	2 channel Inputs/2 channel Outputs Analog Module

For complete information on the MicroLogix 1200 I/O modules, refer to the *MicroLogix 1200 Programmable Controllers User Manual*, publication 1762-UM001A-US-P. To purchase this manual or download a free electronic version, visit us at http://www.theautomationbookstore.com. Or, for fast access to related publications, visit the MicroLogix Internet site http://www.ab.com/micrologix. Electronic versions of our manuals are available for you to search and download.

Expansion I/O Modules

Common Specifications

Specification	Value
Dimensions	90 mm (height) x 87 mm (depth) x 40 mm (width) height including mounting tabs is 110 mm 3.543 in. (height) x 3.425 in. (depth) x 1.575 in. (width) height including mounting tabs is 4.33 in.
Operating Temperature	0°C to +55°C (-32°F to +131°F)
Operating Humidity	5% to 95% non-condensing
Operating Altitude	2000 meters (6561 feet)
Noise Immunity	NEMA standard ICS 2-230
Radiated and Conducted Emissions	EN50081-2 Class A
Electrical /EMC:	*The module has passed testing at the following levels:*
ESD Immunity (IEC1000-4-2)	4 kV contact, 8 kV air, 4 kV indirect
Radiated Immunity (IEC1000-4-3)	10 V/m, 80 to 1000 MHz, 80% amplitude modulation, +900 MHz keyed carrier
Fast Transient Burst (IEC1000-4-4)	2 kV, 5 kHz
Surge Immunity (IEC1000-4-5)	2 kV common mode, 1 kV differential mode
Conducted Immunity (IEC1000-4-6)	10V, 0.15 to 80 MHz(1)

(1) Conducted Immunity frequency range may be 150 kHz to 30 MHz if the Radiated Immunity frequency range is 30 MHz to 1000 MHz.

Input Specifications

Specification	1762-IA8	1762-IQ8
Voltage Category	100/120V ac	24V dc (sink/source)(1)
Operating Voltage Range	79V ac to 132V ac at 47 Hz to 63 Hz	10 to 26.4V dc at 55°C (131°F) 10 to 30V dc at 30°C (86°F)
Number of Inputs	8	8
Bus Current Draw (max.)	50 mA at 5V dc (0.25W)	50 mA at 5V dc (0.25W)
Heat Dissipation (max.)	2.0 Total Watts	3.7 Total Watts
Signal Delay (max.)	On Delay: 20.0 ms Off Delay: 20.0 ms	On Delay: 8.0 ms Off Delay: 8.0 ms
Off-State Voltage (max.)	20V ac	5V dc
Off-State Leakage Current (max.)	2.5 mA	1.5 mA
On-State Voltage (min.)	79V ac (min.) 132V ac (max.)	10V dc
On-State Current	5.0 mA (min.) at 79V ac 47 Hz 12.0 mA (nominal) at 120V ac 60 Hz 16.0 mA (max.) at 132V ac 63 Hz	2.0 mA min. at 10V dc 8.0 mA nominal at 24V dc 12.0 mA max. at 30V dc
Inrush Current (max.)	250 mA	Not Applicable
Nominal Impedance	12K Ω at 50 Hz 10K Ω at 60 Hz	3K Ω
Power Supply Distance Rating	6	6

(1) Sinking/Sourcing Inputs - Sourcing/sinking describes the current flow between the I/O module and the field device. Sourcing I/O circuits supply (source) current to sinking field devices. Sinking I/O circuits are driven by a current sourcing field device. Field devices connected to the negative side (DC Common) of the field power supply are sinking field devices. Field devices connected to the positive side (+V) of the field supply are sourcing field devices.

Output Specifications

Specification	1762-OW8
Voltage Category	AC/DC normally open relay
Operating Voltage Range	5 to 265V ac 5 to 125V dc
Number of Outputs	8
Bus Current Draw (max.)	80 mA at 5V dc (0.40W) 90 mA at 24V dc (2.16W)
Heat Dissipation (max.)	2.9 Total Watts
Signal Delay (max.) - resistive load	On Delay: 10 ms Off Delay: 10 ms
Off-State Leakage (max.)	0 mA
On-State Current (min.)	10 mA at 5V dc
Continuous Current per Point (max.)	2.5A(1)
Continuous Current per Common (max.)	8A
Continuous Current per Module (max.)	16A
Power Supply Distance Rating	6

(1) See Relay Contact Rating Table on page page 7.

Analog I/O Module

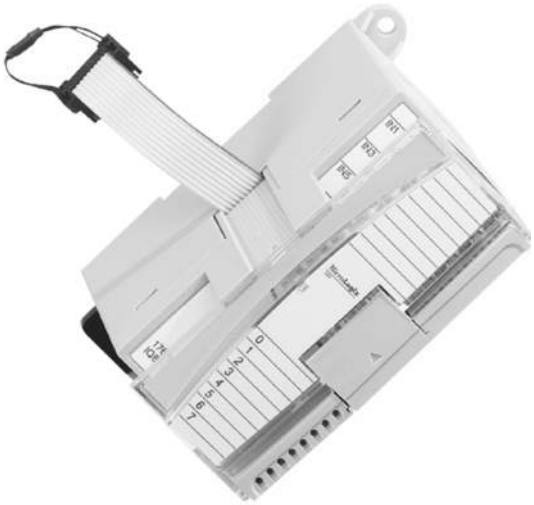

The 1762-IF2OF2 analog combination input/output module converts and digitally stores analog data for use by the MicroLogix 1200 controllers. The module supports connections from any combination of up to two voltage or current analog sensors. The two output channels provide two single-ended analog output channels, each individually configurable for voltage or current. This provides application flexibility, reduces stock inventory and lessens the learning curve.

MicroLogix 1200 I/O's analog module provides 12-bit resolution, making it an excellent choice for applications that monitor and control small changes in the analog value.

The MicroLogix 1200 analog module provides the following input/output types/ranges:

- 0 to 10V dc
- 0 to 20 mA
- 4 to 20 mA

Analog Specifications

Specification	Value
Analog Normal Operating Range	Voltage: 0 to 10V Current: 4 to 20 mA
Resolution[1]	12 bits
Repeatability[2]	±0.1% (max.)
Input and Output Group to Backplane Isolation	30V ac/30V dc rated working voltage[3] (IEC Class 2 reinforced insulation) ±0.1% type test: 500V ac or 707V dc for 1 minute

(1) Unipolar, over the full scale analog range.
(2) Repeatability is the ability of the input module to register the same reading in successive measurements for the same input signal.
(3) Rated working voltage is the maximum continuous voltage that can be applied at the input terminal, including the input signal and the value that floats above ground potential (for example, 10V dc input signal and 20V dc potential above ground).

Analog Input Specifications

Specification	Value
Number of Inputs	2 differential (unipolar)
Non-linearity (in percent full scale)	±0.1%
Input Impedance	Voltage Terminal: 200K Ω Current Terminal: 250 Ω
Channel Diagnostics	Over-or under-range or open-circuit condition by bit reporting for analog inputs.

Analog Output Specifications

Specification	Value
Number of Outputs	2 single-ended (unipolar)
Resistive Load on Current Output	0 to 500 Ω (includes wire resistance)
Load Range on Voltage Output	> 1K Ω
Non-linearity (in percent full scale)	±0.5% (max.)
Open and Short-Circuit Protection	Yes
Output Overvoltage Protection	Yes

3RT contactors, 3-pole
Size S00 to S3

• Revised •
09/22/15

SIRIUS

Selection and ordering data

3RT201.-1A

3RT201. -2A. . .

3RT2028-1N...

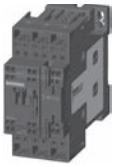
3RT2025-2B...

3RT2035-1A...

3RT1044-1A...

Frame Size	Amp Ratings AC3	AC1	Single-phase HP ratings 115V	208V	230V	Three-phase HP ratings 208V	230V	460V	575V	Auxiliary contacts NO	NC	Screw Terminals Order No.	Spring-Loaded Terminals[1] Order No.	Weight approx. kg
3RT 3-pole contactors														
S00	7	18	0.25	0.5	0.75	1.5	2	3	5	1	0	3RT2015-1□●●1	3RT2015-2□●●1	0.24/0.29
										0	1	3RT2015-1□●●2	3RT2015-2□●●2	
	9	22	0.33	1	1	2	3	5	7.5	1	0	3RT2016-1□●●1	3RT2016-2□●●1	
										0	1	3RT2016-1□●●2	3RT2016-2□●●2	
	12	22	0.5	1.5	2	3	3	7.5	10	1	0	3RT2017-1□●●1	3RT2017-2□●●1	
										0	1	3RT2017-1□●●2	3RT2017-2□●●2	
	16	22	1	2	2	3	5	10	10	1	0	3RT2018-1□●●1	3RT2018-2□●●1	
										0	1	3RT2018-1□●●2	3RT2018-2□●●2	
S0	9	40	1	1	1	2	3	5	7.5	1	1	3RT2023-1□●●0	3RT2023-2□●●0	0.42/0.60
	12	40	1	2	2	3	3	7.5	10	1	1	3RT2024-1□●●0	3RT2024-2□●●0	
	16	40	1	2	3	5	5	10	15	1	1	3RT2025-1□●●0	3RT2025-2□●●0	
	25	40	2	3	3	7.5	7.5	15	20	1	1	3RT2026-1□●●0	3RT2026-2□●●0	
	32	50	2	5	5	10	10	20	25	1	1	3RT2027-1□●●0	3RT2027-2□●●0	
	38	50	3	5	5	10	10	25	25	1	1	3RT2028-1□●●0	3RT2028-2□●●0	
S2	40	60	3	5	7.5	10	15	30	40	1	1	3RT2035-1□●●0	3RT2035-3□●●0	0.99/1.121
	50	70	3	7.5	10	15	15	40	50	1	1	3RT2036-1□●●0	3RT2036-3□●●0	
	65	80	5	10	10	20	20	50	50	1	1	3RT2037-1□●●0	3RT2037-3□●●0	
	80[2]	90	5	10	15	20	25	50	60	1	1	3RT2038-1□●●0	3RT2038-3□●●0	
S3	65	100	5	10	15	20	25	50	60	0	0	3RT1044-1□●●0	3RT1044-3□●●0	1.8/2.8
	80	120	7.5	15	15	25	30	60	75	0	0	3RT1045-1□●●0	3RT1045-3□●●0	
	95	120	10	15	20	30	30	75	100	0	0	3RT1046-1□●●0	3RT1046-3□●●0	

□
AC Coil = A
DC Coil = B
UC Coil = N

□
A
B
N

Size S0 and S2 only: UC Electronic with integrated varistor

NEMA SIze	Amp Ratings	Single-phase HP ratings 115V	230V	Three-phase HP ratings 208V	230V	460V	575V	Auxiliary contacts NO	NC	Screw Terminals with AC coil Order No.	Screw Terminals with 24 VDC coil Order No.	Weight approx. kg
NEMA Labeled Contactors												
0	18	1	2	3	3	5	5	1	0	3RT2018-1A●●1-0UA0	3RT2018-1BB41-0UA0	0.28
1	27	2	3	7.5	7.5	10	10	1	1	3RT2027-1A●●0-0UA0	3RT2027-1BB40-0UA0	0.42
2	45	3	7.5	10	15	25	25	0	0	3RT2036-1A●●0-0UA0	3RT2036-1NB30-0UA0	0.986/1.121
3	90	7.5	15	25	30	50	50	0	0	3RT1046-1A●●0-0UA0	3RT1046-1BB40-0UA0	1.8 / 2.8

1) All terminals are spring loaded on frame sizes S00 & S0.
Only the coil terminals are spring loaded on frame sizes S2 & S3.

2) Max UL FLA = 65A at 460V

Note: Ring lug terminals are also available in size S00 & S0 contactors, except contactors with communication interface or UC coil. Change the 8th digit of the order number to a "4", e. g. 3RT2015-4AK61.

For further coil voltages, see page 2/49.
For auxiliaries and accessories, see page 2/66-2/83.
For spare parts, see page 2/94-2/99.
For technical data, see page 2/121-2/142.
For description, see page 2/104-2/105.
For int. circuit diagrams, see page 2/190-2/197.
For dimension drawings, see page 2/209-2/212.

AC Coil Selection for 3RT201 through 3RT104

●●Coil Code	C2[2]	H2[3]	K6	P6	U6	V6	T6
60 Hz	24 V	48 V	120 V	240 V	277 V	480 V	600 V
50 Hz	24 V	48 V	110 V	220 V	—	—	—

[2] Use Code **B0** for 3RT201, S00
[3] Use Code **H0** for 3RT201, S00

DC Coil Selection for 3RT201, 3RT202, 3RT104 (for 3RT203 see UC)

●●Coil Code	A4[4]	B4	W4	E4	F4	G4	M4
DC	12 V	24 V	48 V	60 V	110 V	125 V	220 V

[4] 3RT201 and 3RT202 only

UC Coil Selection for 3RT202

●●Coil Code	B3	F3	P3[4]
UC	21-28V	95-130V	200-280V

UC Coil Selection for 3RT203

●●	B3	F3	P3[4]
	20-33V	83-155V	175-280V

[4] at upper limit = 1.1 x U_S

3RU11, 3RU21 up to 100 A, CLASS 10

Description

The 3RU thermal overload relays up to 100 A are designed for current-dependent protection of applications with normal start-up conditions (see "Trip classes") against impermissibly high rises in temperature as a result of overload or phase failure (see "Phase failure protection"). An overload or phase failure causes the motor current to rise above the set rated motor current (see "Setting"). This current rise heats up the bimetal strips within the relay via heating elements which, in turn, operate the auxiliary contacts via a tripping mechanism due to their deflection (see "Auxiliary contacts"). These switch the load off via a contactor. The switch-off time is dependent on the ratio of tripping current to operational current I_e and is stored in the form of a tripping characteristic with long-term stability (see "Tripping characteristics"). The "Tripped" state is signalled by means of a switching position indicator (see "Indication of status").

Resetting takes place manually or automatically (see "Manual and automatic resetting") after a recovery time has elapsed (see "Recovery time").

The 3RU thermal overload relays are electrically and mechanically optimised to the 3RT contactors such that, in addition to individual mounting, they can also be directly mounted onto the contactors to save space (see "Design and mounting"). The main and auxiliary circuits can be connected in various ways (see "Connection"), including the use of Cage Clamp terminals. When the overload relay has been connected, it can be tested for correct functioning using a TEST slide (see "TEST function"). In addition to the TEST function, the 3RU thermal overload relay is equipped with a STOP function (see "STOP function").

For a wide variety of application possibilities for the 3RU thermal overload relay, please refer to the sections "Application", "Ambient conditions", "Overload relays in WYE-delta combinations" and "Operation with frequency converters".

The 3RU thermal overload relays can protect your loads from overload and phase failure. You must implement short-circuit protection (see "Short-circuit protection") by means of a fuse or circuit-breaker.

The 3RU thermal overload relays are environmentally friendly (see "Environmental considerations") and comply with all the main international standards and approvals (see "Specifications" and "Increased safety type of protection EEx").

The accessories for the 3RU thermal overload relays have been designed on the principle that all requirements are covered by a small number of variants.

Application

The 3RU thermal overload relays are designed for the protection of three-phase and single-phase AC and DC motors.

If single-phase AC or DC loads are to be protected using 3RU thermal overload relays, all three bimetal strips should be heated. Therefore all main circuits of the relay must be connected in series.

Overload relays in WYE-delta combinations

When overload relays are used in WYE-delta combinations, it is important to note that only $1/\sqrt{3}$ of the motor current flows through the mains contactor. An overload relay mounted on the main contactor must be set to 0.58 times the motor current.

A second overload relay must be mounted on the star contactor if your load is also to be optimally protected in WYE operation. The WYE current is 1/3 of the rated motor current. The relevant relay must be set to this current.

Control circuit

An additional power supply is not required for operation of the 3RU thermal overload relays.

Ambient conditions

The 3RU thermal overload relays are temperature compensating according to IEC 60 947-4-1/DIN VDE 0660 Part 102 in the temperature range –20 °C to +60 °C. For temperatures from +60 °C to +80 °C, the upper setting value of the setting range must be reduced by a specific factor as given in the table below.

Ambient temperature in °C	Reduction factor for the upper setting value
+60	1.0
+65	0.94
+70	0.87
+75	0.81
+80	0.73

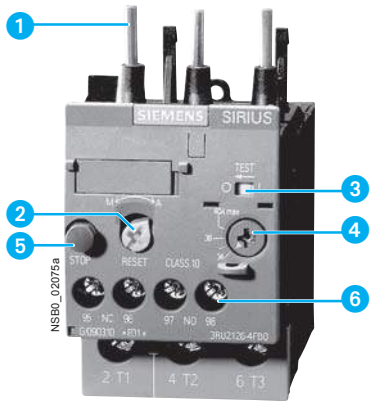

1 **Connection for mounting onto contactors:**
Optimally adapted in electrical, mechanical and design terms to the contactors. The overload relay can be connected directly to these contactor using these pins. Stand-alone installation is possible as an alternative (in conjunction with a terminal bracket for stand-alone installation).

2 **Selector switch for manual/automatic RESET and RESET button:**
With this switch you can choose between manual and automatic RESET. A device set to manual RESET can be reset locally by pressing the RESET button. A remote RESET is possible using the RESET modules (accessories), which are independent of size.

3 **Switch position indicator and TEST function of the wiring:**
Indicates a trip and enables the wiring test.

4 **Motor current setting:**
Setting the device to the rated motor current is easy with the large rotary knob.

5 **STOP button:**
If the STOP button is pressed, the NC contact is opened. This switches off the contactor downstream. The NC contact is closed again when the button is released.

6 **Supply terminals:**
Depending on the device version, the terminals for screw, spring-type or ring lug terminal connection are configured for the main and auxiliary circuit.

A sealable transparent cover can be optionally mounted (accessory). It secures the motor current setting against adjustment.

3RU21 26-4FB00 thermal overload relays

Trip classes

The 3RU thermal overload relay is available for normal start-up conditions in CLASS 10. For further details about trip classes, see "Tripping characteristics".

Tripping characteristics

The tripping characteristics show the relationship between the tripping time and the tripping current as a multiple of the operational current I_e and are specified for symmetrical three-pole and two-pole loading from cold.

The smallest current at which tripping occurs is called the limiting tripping current. In accordance with IEC 60 947-4-1/DIN VDE 0660 Part 102, this must lie within certain specified limits. The limits of the limiting tripping current lie, in the case of the 3RU11 thermal overload relay for symmetrical three-pole loading between 105 % and 120 % of the operational current. Starting from the limiting tripping current, the tripping characteristic moves on to larger tripping currents based on the characteristics of the so-called trip classes (CLASS 10, CLASS 20 etc.). The trip classes describe time-intervals within which the overload relay must trip with 7.2 times the operational current I_e for symmetrical three-pole loading from cold.

The tripping times are:

CLASS	Tripping times
10A	2 s to 10 s
10	4 s to 10 s
20	6 s to 20 s
30	9 s to 30 s

Description

This is the schematic representation of a characteristic. The characteristics of the individual 3RU thermal overload relays can be requested from Technical Assistance at the e-mail address: nst.technical-assistance@siemens.de

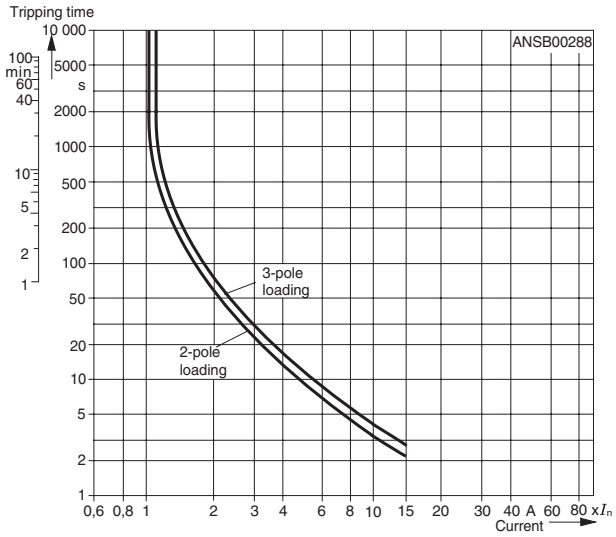

The tripping characteristic of a three-pole 3RU thermal overload relay (see characteristic for symmetrical three-pole loading from cold) is valid when all three bimetal strips are loaded with the same current simultaneously. If, however, only two bimetal strips are heated as a result of phase failure, these two strips would have to provide the force necessary for operating the release mechanism and, if no additional measures were implemented, they would require a longer tripping time or a higher current. These increased current levels over long periods usually result in damage to the consumer. To prevent damage, the 3RU thermal overload relay features phase failure sensitivity which, thanks to an appropriate mechanical mechanism, results in accelerated tripping according to the characteristic for two-pole loading from cold.

In contrast to a load in the cold state, a load at operating temperature has a lower heat reserve. This fact affects the 3RU thermal overload relay in that following an extended period of loading at operational current I_e, the tripping time reduces by about a quarter.

Phase failure protection

The 3RU thermal overload relays feature phase failure protection (see "Tripping characteristics") for the purpose of minimizing the heating of the load during single-phase operation as a result of phase failure.

Setting

The 3RU thermal overload relay is adjusted to the rated motor current using a rotary knob. The scale of the rotary knob is calibrated in Amperes.

Manual and automatic resetting

It is possible to switch between manual resetting and automatic resetting by depressing and rotating the blue button (RESET button). When manual resetting is selected, a reset can be performed directly on the device by pressing the RESET button. Remote resetting can be implemented by using the mechanical and electrical RESET modules from the range of accessories (see "Accessories"). When the blue button is set to Automatic RESET, the relay will be reset automatically.

A reset is not possible until the recovery time has elapsed (see "Recovery time").

Recovery time

After tripping due to an overload, it takes a certain length of time for the bimetal strips of the 3RU thermal overload relays to cool down. The relay can only be reset once it has cooled down. This time (recovery time) is dependent on the tripping characteristic and the level of the tripping current.

After tripping due to overload, the recovery time allows the load to cool down.

TEST function

Correct functioning of the ready 3RU thermal overload relay can be tested with the TEST slide. The slide is operated to simulate tripping of the relay. During this simulation, the NC contact (95-96) is opened and the NO contact (97-98) is closed whereby the overload relay checks that the auxiliary circuit is wired correctly. When the 3RU thermal overload relay is set to Automatic RESET, an automatic reset takes place when the TEST slide is released. The relay must be reset using the RESET button when it is set to Manual RESET.

STOP function

When the STOP button is pressed, the NC contact is opened and the series-connected contactor and therefore the load is switched Off. The load is reconnected via the contactor when the STOP button is released.

Status indication

The current status of the 3RU thermal overload relay is indicated by the position of the marking on the "TEST function/switching position indicator" slide. The marking on the slide is on the left at the "O" mark following a trip due to overload or phase failure and at the "I" mark otherwise.

Auxiliary contacts

The 3RU thermal overload relay is equipped with an NO contact for the tripped signal and an NC contact for switching off the contactor.

Connection

All the 3RU thermal overload relays have screw terminals for the main and auxiliary circuits. Once the box terminals have been removed from the main conductor connections of the overload relays of size S3, it is possible to connect busbars.

Alternatively the devices are available with either spring loaded or with ring lug terminals on both the control and the main terminals. For details of various connection possibilities, see the "Technical data" and "Selection and ordering data".

Design and mounting

The 3RU thermal overload relays are suitable for direct mounting on the 3RT contactors. They can also be mounted as single units if the appropriate adapters are used. For details of the mounting possibilities, see the "Selection and ordering data" and the "Technical data".

Operation with frequency converters

The 3RU thermal overload relays are suitable for operation with frequency converters. Depending on the frequency of the converter, a current higher than the motor current may have to be set due to the occurrence of eddy currents and skin effects.

Environmental considerations

The devices are manufactured taking environmental considerations into account and comprise environmentally-friendly and recyclable materials.

Specifications

The 3RU thermal overload relays comply with the requirements of:

- IEC 60 947-1/ DIN VDE 0660 Part 100
- IEC 60 947-4-1/ DIN VDE 0660 Part 102
- IEC 60 947-5-1/ DIN VDE 0660 Part 200
- IEC 60801-2, -3, -4, -5 and
- UL 508/CSA C 22.2.

The 3RU11 thermal overload relays are also safe from touch according to DIN VDE 0106 Part 100 and climate-proof to IEC 721.

Degree of protection "Increased safety" EEx

The 3RU thermal overload relay meets the requirements for overload protection of motors of the "Increased safety" type of protection EEx e IEC 50 019/ DIN VDE 0165, DIN VDE 0170, DIN VDE 171.
KEMA test certificate number Ex-97.Y.3235,
DMT 98 ATEX G001,
EN 50 019: 1977 + A1 ... A5,
Increased Safety "e": Appendix A, Guideline for temperature monitoring of squirrel cage motors during operation.

Accessories

For the 3RU thermal overload relay, there are:

- one adapter for each of the four overload relay sizes S00 to S3 for individual mounting
- one electrical remote RESET module for all sizes in three different voltage variants
- one mechanical remote RESET module for all sizes
- one cable release for all sizes for resetting inaccessible devices
- terminal covers

The accessories can also be used for the 3RB solid state overload relay.

3RU11, 3RU21 up to 100 A, CLASS 10

• Revised •
04/20/15

SIRIUS

Selection and ordering data

Features and technical characteristics
- Auxiliary contacts: 1 NO + 1 NC
- Manual/automatic RESET
- Switching position indication
- CLASS 10
- TEST function
- STOP button
- Phase failure sensitivity
- Sealable cover: optional in S00, S0 & S2. Integrated in S3

Ordering information

- Replace the (••) with the letter Number combination from the Terminal types I table
- Replace the (††) with the letter Number combination from the Terminal types II table
- For description, see page 3/8
- For technical data, see pages 3/12-3/15
- For circuit diagrams, see page 3/15
- For dimension drawings, see page 3/16-3/17.

•• Terminal Types I

Type	Mounting Type	Ltr
Screw	Direct to Contactor	B0
Screw[1]	Stand Alone	B1
Spring[2]	Direct to Contactor	C0
Spring[1] [2]	Stand Alone	C1
Ring Lug	Direct to Contactor	J0

†† Terminal Types II

Type	Mounting Type	Ltr
Screw	Direct to Contactor	B0
Screw [4]	Stand Alone	B1
Spring [3]	Direct to Contactor	D0
Spring [3] [4]	Stand Alone	D1

3RU2116-1GB0

3RU2116-1GC0

3RU2126-4NB0

3RU2136-4RB1

3RU1146-4DB0

Thermal Overload Relays up to 40A Frame Size S00 and S0 ••

Setting Range A	Order No.	Setting Range A	Order No.	Weight approx. (screw/ spring) kg
Frame Size S00: For mounting directly to 3RT201 contactors or for stand-alone installation				
0.11 - 0.16	**3RU2116-0A••**	1.4 - 2	**3RU2116-1B••**	0.13/0.15
0.14 - 0.2	**3RU2116-0B••**	1.8 - 2.5	**3RU2116-1C••**	
0.18 - 0.25	**3RU2116-0C••**	2.2 - 3.2	**3RU2116-1D••**	
0.22 - 0.32	**3RU2116-0D••**	2.8 - 4	**3RU2116-1E••**	
0.28 - 0.4	**3RU2116-0E••**	3.5 - 5	**3RU2116-1F••**	0.13/0.15
0.35 - 0.5	**3RU2116-0F••**	4.5 - 6.3	**3RU2116-1G••**	
0.45 - 0.63	**3RU2116-0G••**	5.5 - 8	**3RU2116-1H••**	
0.55 - 0.8	**3RU2116-0H••**	7 - 10	**3RU2116-1J••**	
0.7 - 1	**3RU2116-0J••**	9 - 12.5	**3RU2116-1K••**	0.13/0.15
0.9 - 1.25	**3RU2116-0K••**	11 - 16	**3RU2116-4A••**	
1.1 - 1.6	**3RU2116-1A••**			
Frame Size S0: For mounting directly to 3RT202 contactors or for stand-alone installation				
1.8 - 2.5	**3RU2126-1C••**	11 - 16	**3RU2126-4A••**	0.16/0.22
2.2 - 3.2	**3RU2126-1D••**	14 - 20	**3RU2126-4B••**	
2.8 - 4	**3RU2126-1E••**	17 - 22	**3RU2126-4C••**	
3.5 - 5	**3RU2126-1F••**	20 - 25	**3RU2126-4D••**	
4.5 - 6.3	**3RU2126-1G••**	23 - 28	**3RU2126-4N••**	0.16/0.22
5.5 - 8	**3RU2126-1H••**	27 - 32	**3RU2126-4E••**	
7 - 10	**3RU2126-1J••**	30 - 36	**3RU2126-4P••**	
9 - 12.5	**3RU2126-1K••**	34 - 40	**3RU2126-4F••**	

Thermal Overload Relays up to 100A Frame Size S2 and S3 ††

Setting Range A	Order No.	Setting Range A	Order No.	Weight approx. (screw/ spring) kg
Frame Size S2: For mounting directly to 3RT203 contactors [4]				
22 - 32	**3RU2136-4E††**	47 - 57	**3RU2136-4Q††**	0.34
28 - 40	**3RU2136-4F††**	54 - 65	**3RU2136-4J††**	
36 - 45	**3RU2136-4G††**	62 - 73	**3RU2136-4K††**	
40 - 50	**3RU2136-4H††**	70 - 80	**3RU2136-4R††**	
Frame Size S3: For mounting directly to 3RT104 contactors [4]				
18 - 25	**3RU1146-4D††**	45 - 63	**3RU1146-4J††**	0.55
22 - 32	**3RU1146-4E††**	57 - 75	**3RU1146-4K††**	
28 - 40	**3RU1146-4F††**	70 - 90	**3RU1146-4L††**	
36 - 50	**3RU1146-4H††**	80 - 100	**3RU1146-4M††**	

[1] Not available for size S0 3RU212 with current setting range below 14 A.

[2] Size S00 and S0: main and auxiliary conductor terminals are spring-type.

[3] Size S2 and S3 auxiliary terminals are spring-type only. Main conductor terminals are screw.

[4] 3RU Overloads in S2 and S3 frame are available preassembled with a terminal bracket for standalone mounting. S2 and S3 overloads can also be customer assembled to the terminal bracket (see Accessories).

Auxiliary switch blocks

Selection and ordering data

3RH2911-1HA01

3RH2911-2HA01

3RH19 21-1HA. .

3RH19 21-2HA . .

For contactors/ control relays	Rated operational Current [3] 6A NEMA A600/Q600	Contactor with HS block Ident. No.	Connections position	Auxiliary contacts Version NO	NC	NO	NC	Screw Terminals[1] Order No.	Spring Terminals[1] Order No.
Type									
Auxiliary switch blocks for snapping onto the front according to EN 50012 (also compliant with the requirements according to EN 50005)									
Size S00 [2]									
For assembling contactors with 2, 3, 4, or 5 auxiliary contacts									
3RT201., Ident. No. 10E 3RT231. 3RT251.	**11E**			—	1	—	—	**3RH2911-1HA01**	**3RH2911-2HA01**
	12E			—	2	—	—	**3RH2911-1HA02**	**3RH2911-2HA02**
	13E			—	3	—	—	**3RH2911-1HA03**	**3RH2911-2HA03**
	21E			1	—	—	—	**3RH2911-1HA10**	**3RH2911-2HA10**
	21E			1	1	—	—	**3RH2911-1HA11**	**3RH2911-2HA11**
	22E			1	2	—	—	**3RH2911-1HA12**	**3RH2911-2HA12**
	23E			1	3	—	—	**3RH2911-1HA13**	**3RH2911-2HA13**
	31E			2	—	—	—	**3RH2911-1HA20**	**3RH2911-2HA20**
	31E			2	1	—	—	**3RH2911-1HA21**	**3RH2911-2HA21**
	32E			2	2	—	—	**3RH2911-1HA22**	**3RH2911-2HA22**
	41E			3	—	—	—	**3RH2911-1HA30**	**3RH2911-2HA30**
	41E			3	1	—	—	**3RH2911-1HA31**	**3RH2911-2HA31**
Size S0 to S2									
For assembling contactors with 3, 4, or 5 auxiliary contacts									
3RT202. , Ident. No. 11E 3RT232. 3RT252. 3RT203. 3RT233. 3RT235.	**12E**			—	1	—	—	**3RH2911-1HA01**	**3RH2911-2HA01**
	13E			—	2	—	—	**3RH2911-1HA02**	**3RH2911-2HA02**
	14E			—	3	—	—	**3RH2911-1HA03**	**3RH2911-2HA03**
	21E			1	—	—	—	**3RH2911-1HA10**	**3RH2911-2HA10**
	22E			1	1	—	—	**3RH2911-1HA11**	**3RH2911-2HA11**
	23E			1	2	—	—	**3RH2911-1HA12**	**3RH2911-2HA12**
	24E			1	3	—	—	**3RH2911-1HA13**	**3RH2911-2HA13**
	31E			2	—	—	—	**3RH2911-1HA20**	**3RH2911-2HA20**
	32E			2	1	—	—	**3RH2911-1HA21**	**3RH2911-2HA21**
	33E			2	2	—	—	**3RH2911-1HA22**	**3RH2911-2HA22**
	41E			3	—	—	—	**3RH2911-1HA30**	**3RH2911-2HA30**
	42E			3	1	—	—	**3RH2911-1HA31**	**3RH2911-2HA31**
Auxiliary switch blocks for snapping onto the front according to EN 50012									
Sizes S3 to S12									
4-pole									
3RT1. 4 to 3RT1. 7, 3RT11.	**31**			3	1	—	—	**3RH1921-1HA31**	**3RH1921-2HA31**
	22			2	2	—	—	**3RH1921-1HA22**	**3RH1921-2HA22**
	13			1	3	—	—	**3RH1921-1HA13**	**3RH1921-2HA13**
	22	(with location digits 5, 6, 7, 8)		2	2	—	—	**3RH1921-1XA22-0MA0**	**3RH1921-2XA22-0MA0**

EN50005 and EN50012 designate the markings of the auxiliary terminal numbers.
For position of the terminals see pages 2/202-2/206.
For int. circuit diagrams see page 2/190.
3RH29 aux blocks are not intended for use with 3RT1 or 3RH1 contactors and relays.
3RH19 aux blocks are not intended for use with 3RT2 or 3RH2 contactors and relays.
For auxiliary switch blocks for 3RH2140 and 3RH2440 see page 2/51.

1) The 3RH2911-.HA.. aux. switches are available with ring-lug terminals. Replace the 8th digit of the Order No. with a "4".

2) Size S00 can be mounted according to EN 50012 only on basic units which have no integrated NC contact.

3) UL ratings: See appendix page 19/7

Selection and ordering data

3RH2911-1FA40

3RH2911-2FA40

3RH19 21-1C. . .

3RH19 21-2C . . .

3RH19 21-1LA . .

3RH19 21-1MA..

For contactors/ control relays	Rated operational Current [3] 6A NEMA A600/Q600	Contactor with HS block Ident. No.	Connections position	Auxiliary contacts Version				Screw Terminals[1] Order No.	Spring Terminals[1] Order No.
Type				NO	NC	NO	NC		
Auxiliary switch blocks for snapping onto the front according to EN 50005									
Sizes S00 to S2									
2- or 4-pole auxiliary switch blocks for assembling contactors with 3 and 5 or 4 and 6 auxiliary contacts									
3RT2. 1.,	**40**			4	—	—	—	**3RH2911-1FA40**	**3RH2911-2FA40**
3RT2. 2.,	**22**			2	2	—	—	**3RH2911-1FA22**	**3RH2911-2FA22**
3RT2. 3.,	**04** [1]			—	4	—	—	**3RH2911-1FA04**	**3RH2911-2FA04**
3RH21 ..,	**11** [2]			—	—	1	1	**3RH2911-1FB11**	**3RH2911-2FB11**
3RH24 ..	**22** [2]			1	1	1	1	**3RH2911-1FB22**	**3RH2911-2FB22**
	22 [2]			—	—	2	2	**3RH2911-1FC22**	**3RH2911-2FC22**
1- and 2- pole auxiliary switch blocks, cable entry from above or below									
3RT2. 1.,	**10**		Top	1	—	—	—	**3RH2911-1AA10**	—
3RT2. 2.,			Bottom	1	—	—	—	**3RH2911-1BA10**	—
3RT2. 3.,	**01**		Top	—	1	—	—	**3RH2911-1AA01**	—
3RH21 ..,			Bottom	—	1	—	—	**3RH2911-1BA01**	—
3RH24 ..	**11**		Top	1	1	—	—	**3RH2911-1LA11**	—
			Bottom	1	1	—	—	**3RH2911-1MA11**	—
	20		Top	2	—	—	—	**3RH2911-1LA20**	—
			Bottom	2	—	—	—	**3RH2911-1MA20**	—
Sizes S3 to S12									
4-pole auxiliary switch blocks									
3RT1. 4 to	**40**			4	—	—	—	**3RH1921-1FA40**	**3RH1921-2FA40**
3RT1. 7,	**31**			3	1	—	—	**3RH1921-1FA31**	**3RH1921-2FA31**
3RT11	**22**			2	2	—	—	**3RH1921-1FA22**	**3RH1921-2FA22**
	04			—	4	—	—	**3RH1921-1FA04**	**3RH1921-2FA04**
	22 U			—	—	2	2	**3RH1921-1FC22**	**3RH1921-2FC22**
Single-pole auxiliary switch blocks (also compliant with EN 5001[2])									
3RT1. 4 to	—			1	—	—	—	**3RH1921-1CA10**	**3RH1921-2CA10**
3RT1. 7,	—			—	1	—	—	**3RH1921-1CA01**	**3RH1921-2CA01**
3RT11	—			—	—	1	—	**3RH1921-1CD10**	—
	—			—	—	—	1	**3RH1921-1CD01**	—
2-pole auxiliary switch blocks with cable entry from one side									
3RT1. 4 to	—		Top	1	1	—	—	**3RH19 21-1LA11**	—
3RT1. 7,	—		Bottom	1	1	—	—	**3RH19 21-1MA11**	—
3RT11	—		Top	2	—	—	—	**3RH19 21-1LA20**	—
	—		Bottom	2	—	—	—	**3RH19 21-1MA20**	—
	—		Top	—	2	—	—	**3RH19 21-1LA02**	—
	—		Bottom	—	2	—	—	**3RH19 21-1MA02**	—

EN50005 and EN50012 designate the markings of the auxiliary terminal numbers.
For position of the terminals see pages 2/202-2/206.
For int. circuit diagrams see page 2/190.

1) Mounting is permitted only on basic units which have no integrated NC contact.

2) Version with early make and delayed break contacts

3) UL ratings: See appendix page 19/7

CONTROL TRANSFORMERS

GENERAL SPECIFICATIONS:

STYLE: SERIES 2 IMPERVITRAN
APPROVALS: UL/Cul FILE# E46323
TEMP CLASS: 105°C/130°C
VA SIZES: 50-1500

STYLE: IMPERVITRAN (NOT SERIES 2)
APPROVALS: UL LISTED FILE# E46323/ CSA APPROVED FILE# LR27533
TEMP CLASS: 105°C/130°C/180°C
VA SIZES: 1000-5000

TERMINAL TORQUE:
ALL IMPERVITRAN PRODUCT
≤30A: 20 INCH-POUNDS
>30A: 30 INCH-POUNDS

SUFFIX DESCRIPTION:

"R" IN SUFFIX DENOTES INSTALLED CLASS "CC" PRIMARY FUSE BLOCK
TWO LETTER SUFFIX = TEMP CLASS 105C
THREE LETTER SUFFIX ENDING "F" = TEMP CLASS 130C
THREE LETTER SUFFIX ENDING "H" = TEMP CLASS 180C

GROUP "A"

VOLTAGE:
PRI: 220x440, 230x460, 240x480
SEC: 110/115/120

CATALOG NUMBER	VA	AMPS
B050BTZ13JK	50	0.43
B050BTZ13RB		
B075BTZ13JK	75	0.65
B075BTZ13RB		
B100BTZ13JK	100	0.87
B100BTZ13RB		
B150BTZ13JKF	150	1.30
B150BTZ13RBF		
B200BTZ13JKF	200	1.74
B200BTZ13RBF		
B250BTZ13JKF	250	2.17
B250BTZ13RBF		
B300BTZ13JKF	300	2.61
B300BTZ13RBF		
B350BTZ13JKF	350	3.04
B350BTZ13RBF		
B500BTZ13JKF	500	4.35
B500BTZ13RBF		
B750BTZ13JKF	750	6.52
B750BTZ13RBF		
B1K0BTZ13JKF	1000	8.70
B1K0BTZ13RBF		
B1K5BTZ13JKF	1500	13.04
B1K5BTZ13RBF		
B2K0BTZ13JKH	2000	17.39
B2K0BTZ13RBH		
B3K0BTZ13JXH	3000	26.09
B5K0BTZ13JXH	5000	43.48

GROUP "B"

VOLTAGE:
PRI: 240x480
SEC: 24

CATALOG NUMBER	VA	AMPS
B050PU7JK	50	2.08
B050PU7RB		
B075PU7JK	75	3.13
B075PU7RB		
B100PU7JK	100	4.17
B100PU7RB		
B150PU7JKF	150	6.25
B150PU7RBF		
B200PU7JKF	200	8.33
B200PU7RBF		
B250PU7JKF	250	10.42
B250PU7RBF		
B300PU7JKF	300	12.50
B300PU7RBF		
B350PU7JKF	350	14.58
B350PU7RBF		
B500PU7JKF	500	20.83
B500PU7RBF		
B750PU7JKF	750	31.25
B750PU7RBF		

GROUP "C"

VOLTAGE:
PRI: 120x240
SEC: 24

CATALOG NUMBER	VA	AMPS
B050LP7JK	50	2.08
B050LP7RB		
B075LP7JK	75	3.13
B075LP7RB		
B100LP7JK	100	4.17
B100LP7RB		
B150LP7JKF	150	6.25
B150LP7RBF		
B200LP7JKF	200	8.33
B200LP7RBF		
B250LP7JKF	250	10.42
B250LP7RBF		
B300LP7JKF	300	12.50
B300LP7RBF		
B350LP7JKF	350	14.58
B350LP7RBF		
B500LP7JKF	500	20.83
B500LP7RBF		
B750LP7JKF	750	31.25
B750LP7RBF		

GROUP "E"

VOLTAGE:
PRI: 550/575/600
SEC: 110/115/120

CATALOG NUMBER	VA	AMPS
B050WZ13XK	50	0.43
B050WZ13RK		
B075WZ13XK	75	0.65
B075WZ13RK		
B100WZ13XK	100	0.87
B100WZ13RK		
B150WZ13XKF	150	1.30
B150WZ13RKF		
B200WZ13XKF	200	1.74
B200WZ13RKF		
B250WZ13XKF	250	2.17
B250WZ13RKF		
B300WZ13XKF	300	2.61
B300WZ13RKF		
B350WZ13XKF	350	3.04
B350WZ13RKF		
B500WZ13XKF	500	4.35
B500WZ13RKF		
B750WZ13XKF	750	6.52
B750WZ13RKF		

GROUP "F"

VOLTAGE:
PRI: 208/277
SEC: 120

CATALOG NUMBER	VA	AMPS
B050MQ15XK	50	0.42
B050MQ15RK		
B075MQ15XK	75	0.63
B075MQ15RK		
B100MQ15XK	100	0.83
B100MQ15RK		
B150MQ15XKF	150	1.25
B150MQ15RKF		
B200MQ15XKF	200	1.67
B200MQ15RKF		
B250MQ15XKF	250	2.08
B250MQ15RKF		
B300MQ15XKF	300	2.50
B300MQ15RKF		
B350MQ15XKF	350	2.92
B350MQ15RKF		
B500MQ15XKF	500	4.17
B500MQ15RKF		
B750MQ15XKF	750	6.25
B750MQ15RKF		

GROUP "G"

VOLTAGE:
PRI: 208/230/460
SEC: 115

CATALOG NUMBER	VA	AMPS
B050MBT13XK	50	0.43
B050MBT13RK		
B075MBT13XK	75	0.65
B075MBT13RK		
B100MBT13XK	100	0.87
B100MBT13RK		
B150MBT13XKF	150	1.30
B150MBT13RKF		
B200MBT13XKF	200	1.74
B200MBT13RKF		
B250MBT13XKF	250	2.17
B250MBT13RKF		
B300MBT13XKF	300	2.61
B300MBT13RKF		
B350MBT13XKF	350	3.04
B350MBT13RKF		
B500MBT13XKF	500	4.35
B500MBT13RKF		
B750MBT13XKF	750	6.52
B750MBT13RKF		
B1K0MBT13XKF	1000	8.70
B1K0MBT13RKF		
B1K5MBT13XKF	1500	13.04
B1K5MBT13RKF		
B2K0MBT13XKH	2000	17.39
B2K0MBT13RKH		
B3K0MBT13XXH	3000	26.09
B5K0MBT13XXH	5000	43.48

Type 3 surge protection device - PLT-SEC-T3-120-FM - 2905228

Please be informed that the data shown in this PDF Document is generated from our Online Catalog. Please find the complete data in the user's documentation. Our General Terms of Use for Downloads are valid (http://phoenixcontact.com/download)

The illustration shows version PLT-SEC-T3-230-FM

Pluggable device protection, according to type 3/class III, for 1-phase power supply networks with separate N and PE (3-conductor system: L1, N, PE), with integrated surge-proof fuse and remote indication contact. Also suitable for DC applications.

Why buy this product

- Varistor-based device protection
- Can be used without separate backup fuse thanks to integrated overcurrent protection
- For 1-phase power supply units (AC/DC)
- Pluggable
- Optical status indicator via LED
- With floating remote indication contact
- Plugs can be checked with CHECKMASTER 2

Key Commercial Data

Packing unit	1 STK
GTIN	4 046356 939690
GTIN	4046356939690
Weight per Piece (excluding packing)	91.600 g
Custom tariff number	85363030
Country of origin	Germany

Technical data

Dimensions

Height	90 mm
Width	17.7 mm

Type 3 surge protection device - PLT-SEC-T3-120-FM - 2905228

Technical data

Dimensions

Horizontal pitch	1 Div.

Ambient conditions

Degree of protection	IP20
Ambient temperature (operation)	-40 °C ... 70 °C
Ambient temperature (storage/transport)	-40 °C ... 70 °C
Altitude	≤ 2000 m (amsl (above mean sea level))
Permissible humidity (operation)	5 % ... 95 %
Shock (operation)	30g (half sinus / 11 ms / 3x ±X, ±Y, ±Z)
Vibration (operation)	5g (10 ... 150 Hz/20 cycles/axis/X, Y, Z)

General

IEC test classification	III
	T3
EN type	T3
Number of ports	One
Mode of protection	L-N
	L-PE
	N-PE
	(L+) - (L-)
	(L+/L-) - PE
Mounting type	DIN rail: 35 mm
Color	light grey RAL 7035
	traffic grey A RAL 7042
Housing material	PA 6.6-FR 20% GF
	PA 6.6-FR
Degree of pollution	2
Flammability rating according to UL 94	V-0
Design	DIN rail module, two-section, divisible
Number of positions	2
Surge protection fault message	Optical, remote indicator contact

Protective circuit

Nominal voltage U_N	120 V AC (TN-S)
	120 V AC (TT - only in use with RCD)
Nominal frequency f_N	50 Hz (60 Hz)
Maximum continuous voltage U_C	150 V AC
	150 V DC
Rated load current I_L	26 A (30 °C)

Type 3 surge protection device - PLT-SEC-T3-120-FM - 2905228

Technical data

Protective circuit

Residual current I_{PE}	≤ 5 µA
Nominal discharge current I_n (8/20) µs	3 kA
Standby power consumption P_C	≤ 150 mVA (at U_{REF})
	≤ 175 mVA (at U_C)
Reference test voltage U_{REF}	132 V AC
Combination wave U_{OC}	6 kV
Voltage protection level U_p (L-N)	≤ 0.85 kV
Voltage protection level U_p (L-PE)	≤ 0.95 kV
Voltage protection level U_p (N-PE)	≤ 0.95 kV
TOV behavior at U_T (L-N)	240 V AC (5 s / withstand mode)
	240 V AC (120 min / withstand mode)
TOV behavior at U_T (L-PE)	240 V AC (5 s / withstand mode)
	240 V AC (120 min / withstand mode)
	1332 V AC (200 ms / safe failure mode)
TOV behavior at U_T (N-PE)	1200 V AC (200 ms / safe failure mode)
Response time t_A (L-N)	≤ 25 ns
Response time t_A (L-PE)	≤ 100 ns
Response time t_A (N-PE)	≤ 100 ns
Short-circuit current rating I_{SCCR}	1.5 kA AC
	0.25 kA DC
Max. backup fuse with branch wiring	not required
Maximum backup fuse for through wiring	25 A (gG / B / C)

Indicator/remote signaling

Switching function	N/C contact
Operating voltage	250 V AC
	125 V DC (200 mA DC)
Operating current	3 A AC
	1 A DC (30 V DC)
Connection method	Screw connection
Conductor cross section flexible	0.2 mm² ... 2.5 mm²
Conductor cross section solid	0.2 mm² ... 4 mm²
Conductor cross section AWG	24 ... 12
Screw thread	M3
Tightening torque	0.8 Nm
Stripping length	8 mm

Connection data

Type 3 surge protection device - PLT-SEC-T3-120-FM - 2905228

Technical data

Connection data

Connection method	Screw connection
Conductor cross section flexible	0.2 mm² ... 2.5 mm²
Conductor cross section solid	0.2 mm² ... 4 mm²
Conductor cross section AWG	24 ... 12
Screw thread	M3
Tightening torque	0.8 Nm
Stripping length	8 mm

UL specifications

SPD Type	4CA
Maximum continuous operating voltage MCOV	150 V AC
	150 V DC
Nominal voltage	120 V DC
Rated load current I_L	25 A
Mode of protection	L-N
	L-G
	N-G
	(L+) - (L-)
	(L+) - G
	(L-) - G
Power distribution system	1
Nominal frequency	50/60 Hz
Measured limiting voltage MLV (L-N)	780 V
Measured limiting voltage MLV (L-G)	760 V
Measured limiting voltage MLV (N-G)	760 V
Measured limiting voltage MLV (L+) - (L-)	780 V
Measured limiting voltage MLV (L+) - G	760 V
Measured limiting voltage MLV (L-) - G	760 V
Nominal discharge current I_n	3 kA

UL indicator/remote signaling

Tightening torque	5 lb_f-in. ... 7 lb_f-in.
Conductor cross section AWG	14 ... 12

UL connection data

Conductor cross section AWG	14 ... 12
Tightening torque	5 lb_f-in. ... 7 lb_f-in.

Standards and Regulations

Type 3 surge protection device - PLT-SEC-T3-120-FM - 2905228

Technical data

Standards and Regulations

Standards/specifications	EN 61643-11 2012

Environmental Product Compliance

China RoHS	Environmentally Friendly Use Period = 50
	For details about hazardous substances go to tab “Downloads”, Category “Manufacturer's declaration”

Approvals

Approvals

Approvals

KEMA-KEUR / CCA / UL Recognized / cUL Recognized / EAC / GL / CSA / cULus Recognized

Ex Approvals

UL Recognized / cUL Recognized / cULus Recognized

Approval details

KEMA-KEUR		http://www.dekra-certification.com	2173868.01
CCA			NTR-NL 7399
UL Recognized		http://database.ul.com/cgi-bin/XYV/template/LISEXT/1FRAME/index.htm	FILE E 330181
cUL Recognized		http://database.ul.com/cgi-bin/XYV/template/LISEXT/1FRAME/index.htm	FILE E 330181
EAC			RU C-DE.A*30.B01561

Type 3 surge protection device - PLT-SEC-T3-120-FM - 2905228

Approvals

GL	http://exchange.dnv.com/tari/	14588-15 HH
CSA	http://www.csagroup.org/services/testing-and-certification/certified-product-listing/	70056020
cULus Recognized	http://database.ul.com/cgi-bin/XYV/template/LISEXT/1FRAME/index.htm	

Phoenix Contact 2017 © - all rights reserved
http://www.phoenixcontact.com

VFDs shall be Allen Bradley PowerFlex 400 Series. See other comments. - ZMC/SCI 20170816

Unidrive M200

Integration through flexible communications

0.25 kW - 110 kW Heavy Duty (0.33 hp - 150 hp)
100 V | 200 V | 400 V | 575 V | 690 V

Control Techniques

EMERSON
Industrial Automation

Unidrive M
Optimized throughput, open automation systems, maximum ease of use

Led by the results of extensive customer-driven market research, we have tailored six Unidrive M feature-sets to specific application needs identified within industrial applications. The Unidrive M200 has flexible networking capability, additional I/O and excellent motor control performance for open loop applications. It also provides an easy upgrade for existing Commander SK users.

For more information on the full Unidrive M family, please download the Unidrive M: Drives for Industry brochure or the 'Discover Unidrive M' App (available on the App Store, Android and online) via www.UnidriveM.com.

N1652 E171230 RoHS Compliant

Unidrive M200 features

M201 variant has additional speed reference potentiometer

Optional AI-485 Adaptor for RS485 communications

Optional AI-Back-up Adaptor and AI-Smart Adaptor allows the drive to use an SD card for parameter cloning and acts as an input for 24 V back-up.

Optional AI- Smart Adaptor has built-in 4 GB memory for parameter cloning and 24 V back-up

Optional IP66 (NEMA 4) rated remote keypad with intuitive plain text multilingual back-lit LCD display for rapid set-up and superior diagnostics

LED keypad fitted as standard for quick commissioning and easy use

User-friendly control connections

Conventional surface and DIN rail mounting* (Up to 1.5 kW)

Useful parameter guide on drive front panel

Easy-to-disconnect internal EMC filter

User-friendly power connections

Drive rated to IP21 / UL open class (NEMA 1) on size 1 to 4 as standard

Conduit kits are available to meet UL Type 1 rating

Robust cable management system providing grounding point for shielded control and power cables

System Integration (SI) option module

System Integration (SI) module slot for communications, fieldbus and additional I/O options (frame size 2 and upwards)

*Additional fixings recommended where heavy vibration is expected

Unidrive M200
Integration through flexible communications

Integrate Unidrive M200 into any system

Unidrive M200 has been designed for applications that require flexible integration with systems via modern communication networks and fieldbuses, or through advanced Rotor Flux Control (RFC-A) open-loop motor control. The M200 provides the most convenient upgrade path for Commander SK users.

The 'SI' Interface in M200 enables integration with a wide range of available industry standard fieldbuses or extended I/O to allow remote control and diagnostics across different networks. These include SI-Ethernet, SI-EtherCAT, SI-PROFINET RT, SI-PROFIBUS, SI-CANopen and SI-DeviceNet. Additionally, the AI-485 Adaptor option permits connection to RS485 networks using Modbus RTU.

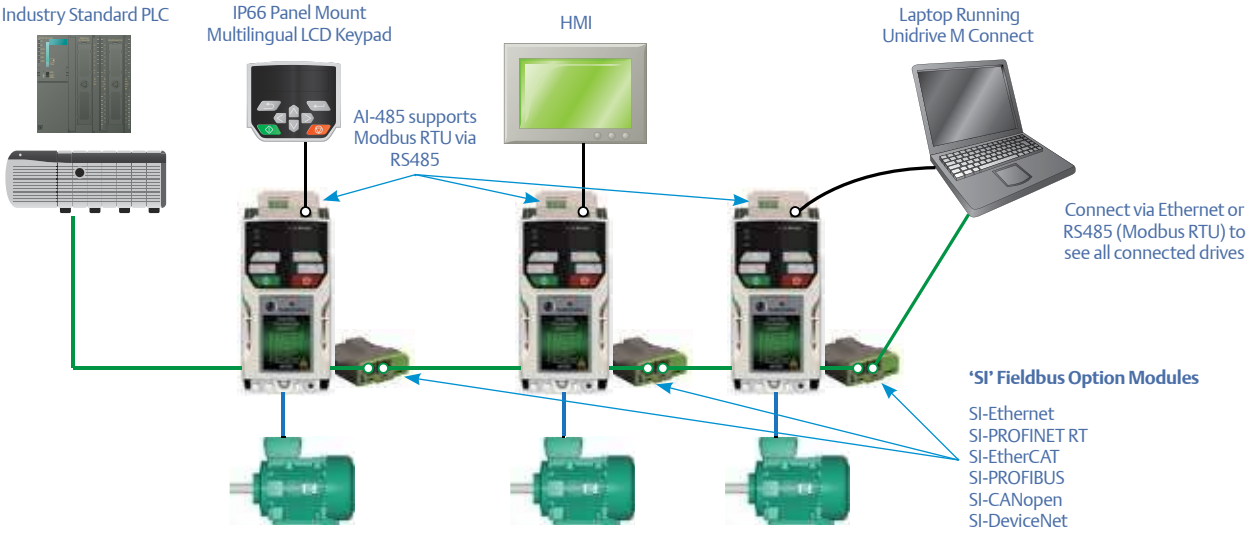

Maximize productivity with performance open-loop motor control

M200's advanced Rotor Flux Control (RFC-A) utilizes closed-loop current control to give maximum stability of induction motors at all powers. It provides a high bandwidth control algorithm with 125 µs current loop update rates and 180 % motor overload for heavy industrial machinery applications.

Install and configure quickly and easily

Unidrive M200 has an easy-to-use fixed LED keypad as standard and a useful parameter guide on the front of the drive to enhance understanding when setting up and interrogating. Parameter sets can be easily saved or transferred between drives using the Unidrive M Connect PC tool or an SD card with AI-Back-up or AI-Smart Adaptor. An easy-fit remote LCD keypad is available for IP66 panel mounting and extra diagnostic information. Fast install DIN rail mounting is supported up to 1.5 kW (2 hp).*

Transfer parameters without mains power

For fast, serial machine production, the AI-Back-up or AI-Smart Adaptor option can be powered by 24 V to transfer parameter sets to and from standard SD Cards.

Minimize downtime with robust and reliable design

Unidrive M200 is extremely reliable due to a design based on over 40 years of drive knowledge, expertise and development. Build quality is ensured using world leading manufacturing processes. M200 is packed with features proven to keep systems running in environments as described by IEC60721-3-3 3C3 and EN60068-2-60 Meth. 4.

- PCBs have conformal coating to further increase resilience to harsh environmental conditions
- A patented air flow system cools the drive more effectively and protects internal components
- Wide supply voltage tolerance keeps drive operation smooth in areas where supplies are variable
- Intelligent 3 speed user-replaceable cooling fan with patented fan-fail detection circuit
- Trip avoidance features take intelligent action instead of tripping out critical processes. For example:
  - ➪ Load Shedding reduces speed at current limits
  - ➪ Supply loss ride-through keeps running during brown outs
- Derating values are available so that M200 can be run in higher temperature environments
- High overload capability - 180 % for 3 s or 150 % for 60 s
- Ingress protection up to IP21- UL open class (NEMA 1) compliance

Reduce application size and cost

Unidrive M200's compact drive dimensions are among the smallest in class at every power rating.

Easily upgrade Commander SK designs and installations

Unidrive M200 is designed for easy migration from Commander SK. Tools are available for fast and easy installation:

- Compatible dimensions, along with retrofit kits, mean that M200 can easily fit in existing Commander SK applications using existing fittings
- Same power and control wiring philosophy
- Parameter porting from Commander SK to Unidrive M200 is supported by the Unidrive M Connect software tool

Typical applications

Speed control for conveyors, fans, positive displacement pumps and mixers - applications where functions are controlled remotely via fieldbus or Ethernet communications.

M201 - potentiometer version

Unidrive M201 variant

Integrated speed reference potentiometer enhances choice and ease of use.

*Additional fixings recommended where heavy vibration is expected

Motor control performance and energy saving

Performance motor control

Unidrive M200 combines the latest microprocessor technology with unique motor control algorithms to give maximum stability of induction motors at all powers. Current loop update rates of up 125 µs and complementary intelligent control features ensure that machine throughput and energy efficiency is maximized in all industrial applications.

Motor control modes include:

Control Mode	Features
Enhanced Open Loop Rotor Flux Control for induction motors (RFC-A)	High performance speed and torque control through an advanced vector algorithm, utilizing closed loop current control to greatly enhance performance for all induction motor sizes without the need for a feedback device.
Open loop vector or V/Hz induction motor control	Reliable performance and easy configuration • 100% torque available down to 1 Hz • Slip compensation • Multi-motor control • Square law V/F mode • Dynamic V/F mode

Easy motor pairing

Several intuitive tools are available to guarantee fast and optimized pairing between M200 and AC induction motors. These include:

- Easy-to-use keypad with parameter reference guide on front panel
- Multilingual LCD remote keypad with clear parameter and diagnostic descriptions
- Two autotune procedures (stationary and rotating) to automatically optimize motor and drive configuration
- Unidrive M Connect software tool providing a comprehensive motor database and set-up wizard

Energy saving

With energy costs a key factor in many industries, Unidrive M is packed with features to enhance energy efficiency:

- Low power standby mode for applications where drives can sit idle for significant periods
- Automatic 3-speed cooling fan keeps energy usage and acoustic noise to a minimum by intelligently responding to load and environmental conditions
- Square law V/F mode is optimized for quadratic loads like pumps and fans to keep motor losses to a minimum
- Dynamic V to F mode keeps energy usage and motor losses to a minimum in low load conditions
- Unidrive M200 is highly efficient (above 98 %)

Unidrive M200 option choices and terminal layout

Control Mode

1. Open loop vector or V/Hz induction motor control

2. Open loop Rotor Flux Control for induction motors (RFC-A)

Input/Output

SI-I/O

4 x Digital I/O

3 x Analog inputs (default) / Digital inputs

1 x Digital input

2 x Relays

Onboard

3 x Analog I/O

5 x Digital I/O

1 x Relay

Communications

AI-485 Adaptor

SI-EtherCAT

SI-PROFIBUS

SI-Ethernet

SI-DeviceNet

SI-CANopen

SI-PROFINET RT

DC back up power supply

AI-Back-up Adaptor and AI-Smart Adaptor (Input for 24 V back-up)

Optional Drive Programming and Operator Interface

Unidrive M Connect

M200 - Fixed LED keypad

M201 - Fixed LED keypad with speed reference potentiometer

Operator Interface

AI-Back-up Adaptor
(provides SD card usage for programming / cloning)

AI-Smart Adaptor
(provides SD card (supplied) usage for programming / cloning)

Remote Keypad (LCD)

Terminal Layout

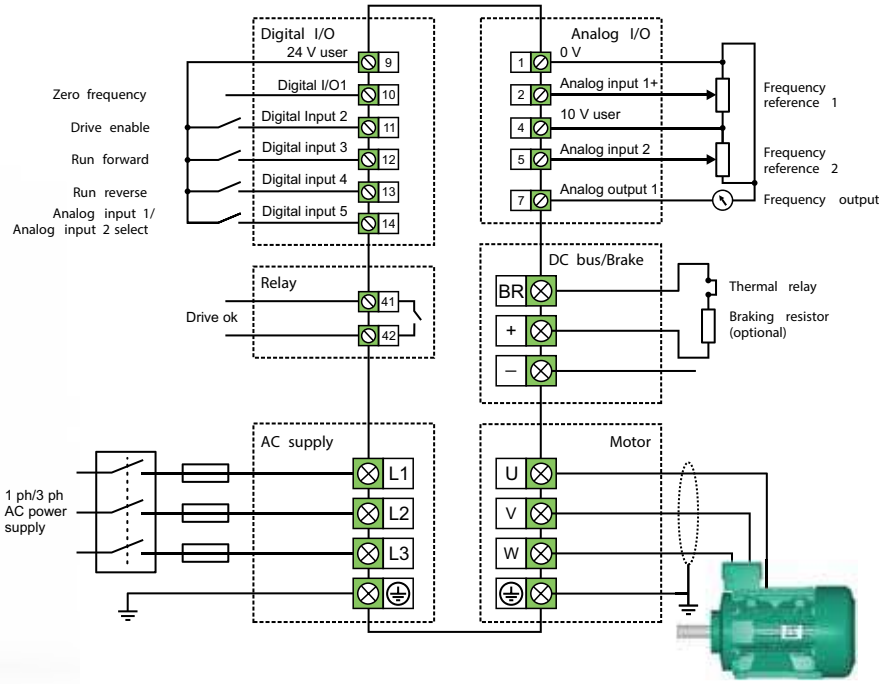

Fast and easy set-up, monitoring and diagnostics

Unidrive M keypads, memory devices and software tools make it easy to access Unidrive M200's full feature set, allowing users to optimize drive tuning, back up parameters and troubleshoot more quickly.

User interface options

Unidrive M benefits from a number of optional keypad choices to meet your application needs.

Type		Benefit
Fixed LED keypad		Simple LED keypad fitted as standard for quick and easy commissioning and use.
Fixed LED keypad with speed reference potentiometer (M201)		Simple LED keypad with user friendly speed reference potentiometer for quick and easy speed control.
Remote Keypad		Remote mountable, intuitive plain text, multilingual LCD keypad for rapid set-up and superior diagnostics (using the AI-485 Adaptor along with a comms lead). Rapid and secure panel fit with 1 x 32 mm hole rated to IP66 (NEMA 4).

Unidrive M Connect commissioning tool

Unidrive M Connect is our latest drive configuration tool for commissioning, optimizing and monitoring drive/system performance. Its development draws from extensive user research, using human centered design principles to give the ultimate user experience:

- Task based commissioning is simplified via familiar Windows interface
- Intuitive graphical tools enhance and simplify user experience
- Dynamic drive logic diagrams and searchable listings are present
- Drive and motor performance can be optimized with minimal specialized drive knowledge
- Supports the import of Commander SK parameter files and allows full drive cloning
- Multiple simultaneous communications channels for a more complete overview of the system
- Drive Discovery gives the ability to find drives on a network automatically without the user having to specify their addresses
- Automatic RTU baud rate scanning on the Unidrive M200 RS485 connection

Portable SD memory card

Unidrive M200 uses popular SD cards for quick and easy parameter and program storage using the AI-Back-up Adaptor.

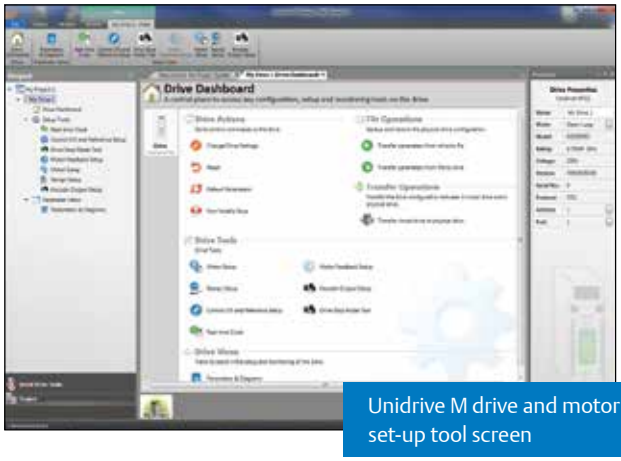

Unidrive M drive and motor set-up tool screen

Unidrive M200 and M201 ratings and specifications

Key:

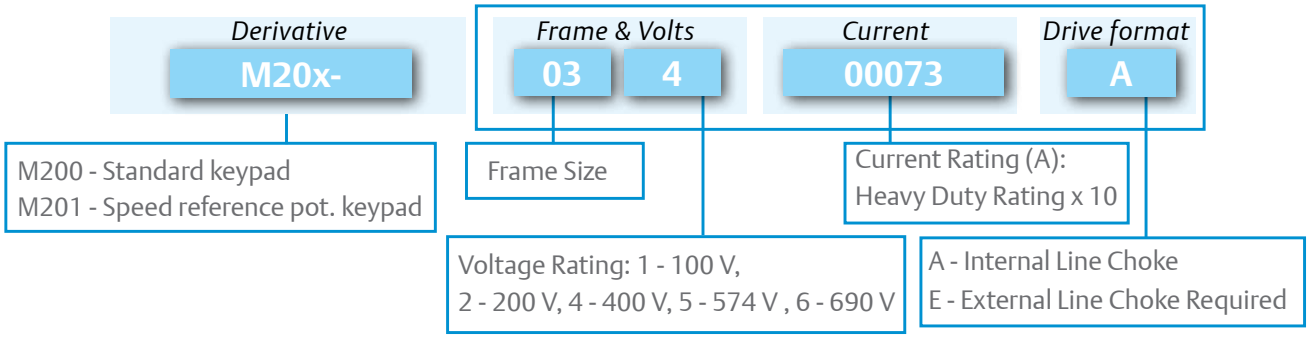

100/120 Vac ±10 %							
Order Code	Supply Phases	Heavy Duty			Normal Duty		
		Max Continuous Current (A)	Motor Shaft Power (kW)	Motor Shaft Power (hp)	Max Continuous Current (A)	Motor Shaft Power (kW)	Motor Shaft Power (hp)
M200-011 00017A	1	1.7	0.25	0.33	For Normal Duty applications, use Heavy Duty ratings.		
M200-011 00024A	1	2.4	0.37	0.5			
M200-021 00042A	1	4.2	0.75	1			
M200-021 00056A	1	5.6	1.1	1.5			

200/240 Vac ±10 %							
M200-012 00017A	1	1.7	0.25	0.33	For Normal Duty applications, use Heavy Duty ratings.		
M200-012 00024A	1	2.4	0.37	0.5			
M200-012 00033A	1	3.3	0.55	0.75			
M200-012 00042A	1	4.2	0.75	1			
M200-022 00024A	1/3	2.4	0.37	0.5			
M200-022 00033A	1/3	3.3	0.55	0.75			
M200-022 00042A	1/3	4.2	0.75	1			
M200-022 00056A	1/3	5.6	1.1	1.5			
M200-022 00075A	1/3	7.5	1.5	2			
M200-032 00100A	1/3	10	2.2	3			
M200-042 00133A	1/3	13.3	3	3			
M200-042 00176A	3	17.6	4	5			
M200-052 00250A	3	25	5.5	7.5	30	7.5	10
M200-062 00330A	3	33	7.5	10	50	11	15
M200-062 00440A	3	44	11	15	58	15	20
M200-072 00610A	3	61	15	20	75	18.5	25
M200-072 00750A	3	75	18.5	25	94	22	30
M200-072 00830A	3	83	22	30	117	30	40
M200-082 01160A	3	116	30	40	149	37	50
M200-082 01320A	3	132	37	50	180	45	60
M200-092 01760A	3	176	45	60	216	55	75
M200-092 02190A	3	219	55	75	266	75	100
M200-092 01760E	3	176	45	60	216	55	75
M200-092 01760E	3	219	55	75	266	75	100

380/480 Vac ±10 %							
Order Code	Supply Phases	Heavy Duty			Normal Duty		
		Max Continuous Current (A)	Motor Shaft Power (kW)	Motor Shaft Power (hp)	Max Continuous Current (A)	Motor Shaft Power (kW)	Motor Shaft Power (hp)
M200-024 00013A	3	1.3	0.37	0.5	For Normal Duty applications, use Heavy Duty ratings.		
M200-024 00018A	3	1.8	0.55	0.75			
M200-024 00023A	3	2.3	0.75	1			
M200-024 00032A	3	3.2	1.1	1.5			
M200-024 00041A	3	4.1	1.5	2			
M200-034 00056A	3	5.6	2.2	3			
M200-034 00073A	3	7.3	3	3			
M200-034 00094A	3	9.4	4	5			
M200-044 00135A	3	13.5	5.5	7.5			
M200-044 00170A	3	17	7.5	10			
M200-054 00270A	3	27	11	20	30	15	20
M200-054 00300A	3	30	15	20	31	15	20
M200-06400350A	3	35	15	25	38	18.5	25
M200-064 00420A	3	42	18.5	30	48	22	30
M200-064 00470A	3	47	22	30	63	30	50
M200-074 00660A	3	66	30	50	79	37	60
M200-074 00770A	3	77	37	60	94	45	75
M200-074 01000A	3	100	45	75	112	55	75
M200-084 01340A	3	134	55	100	155	75	100
M200-084 01570A	3	157	75	125	184	90	125
M200-094 02000A	3	200	90	150	221	110	150
M200-094 02240A	3	224	110	150	266	132	200
M200-094 02000E	3	200	90	150	221	110	150
M200-094 02240E	3	224	110	150	266	132	200
500/575 Vac ±10 %							
M200-055 00030A	3	3	1.5	2	3.9	2.2	3
M200-055 00040A	3	4	2.2	3	6.1	4	5
M200-055 00069A	3	6.9	4	5	10	5.5	7.5
M200-065 00100A	3	10	5.5	7.5	12	7.5	10
M200-065 00150A	3	15	7.5	10	17	11	15
M200-065 00190A	3	19	11	15	22	15	20
M200-065 00230A	3	23	15	20	27	18.5	25
M200-065 00290A	3	29	18.5	25	34	22	30
M200-065 00350A	3	35	22	30	43	30	40
M200-075 00440A	3	44	30	40	53	45	50
M200-075 00550A	3	55	37	50	73	55	60
M200-085 00630A	3	63	45	60	86	75	75
M200-085 00860A	3	86	55	75	108	90	100
M200-095 01040A	3	104	75	100	125	110	125
M200-095 01310A	3	131	90	125	150	110	150
M200-095 01040E	3	104	75	100	125	110	125
M200-095 01310E	3	131	90	125	150	110	150
500/690 Vac ±10 %							
M200-076 00190A	3	19	15	20	23	18.5	25
M200-076 00240A	3	24	18.5	25	30	22	30
M200-076 00290A	3	29	22	30	36	30	40
M200-076 00380A	3	38	30	40	46	37	50
M200-076 00440A	3	44	37	50	52	45	60
M200-076 00540A	3	54	45	60	73	55	75
M200-086 00630A	3	63	55	75	86	75	100
M200-086 00860A	3	86	75	100	108	90	125
M200-096 01040A	3	104	90	125	125	110	150
M200-096 01310A	3	131	110	150	155	132	175
M200-096 01040E	3	104	90	125	125	110	150
M200-096 01310E	3	131	110	150	155	132	175

Unidrive M200 and M201 ratings and specifications

Environmental safety and electrical conformance

- **Size 1 to 4:**
  IP21 / UL open class (NEMA 1). IP20 when the AI Adaptors are fitted.
  UL TYPE 1 compliance requires the appropriate conduit kit to be fitted.
- Ambient temperature -20 °C (4 °F) to 40 °C (104 °F) as standard. 60 °C/ 140 °F with derating for frames 1-4.
- **Size 5 to 9:**
  IP20 / UL open class (NEMA 1). UL TYPE 1 compliance requires the appropriate conduit kit to be fitted.
  IP65 / UL TYPE 12 rating is achieved on the rear of the drive when through panel mounted (9E 15 IP55).
- Ambient temperature -20 °C (4 °F) to 40 °C (104 °F) as standard. 55 °C/ 131 °F with derating for frames 5-9
- **"Applicable to all"**
- Storage temperature -40 °C to 60 °C (-40 °F to 140 °F).
- Humidity 95 % maximum (non-condensing) at 40 °C (104 °F) in accordance with EN/IEC 60068-2-78 and ANSI/EIA-364-31.
- EN/IEC 60068-2-60, Method 4 Corrosive gas.
- Altitude: 0 to 3000 m (0 to 9843 ft), derate 1 % per 100 m (328 ft) between 1000 m and 3000 m (3281 ft and 9843 ft).
- Random Vibration: Tested in accordance with EN/IEC 60068-2-64 with SI and AI option modules fitted.
- Mechanical Shock: Tested in accordance with EN/IEC 60068-2-29.
- Electromagnetic Immunity complies with EN/IEC 61800-3 and EN/IEC 61000-6-2.
- With onboard EMC filter, complies with EN/IEC 61800-3 (2nd environment).
- EN/IEC 61000-6-3 and EN/IEC 61000-6-4 with optional footprint EMC filter.
- EN/IEC 60146-1-1 Supply conditions.
- EN/IEC 61800-5-1 Electrical Safety.
- EN/IEC 61131-2 I/O.
- UL 508C Electrical Safety.

Unidrive M200 feature and specification table

Performance	Current loop update: 125 µs
	Heavy Duty peak rating: 180 % (3 s), 150 % (60 s)
	Normal Duty peak rating: 110 % (165 s)
	Maximum output frequency: 550 Hz
	Switching frequency range: 0.67, 1, 2, 3, 4, 6, 8, 12, 16 kHz (3 kHz default)
Mechanical attributes	DIN rail mountable (size 1 and 2) up to 1.5 kW (2 hp)*
	Commander SK compatible mechanical footprint either as standard or with conversion plates
Parameter back-up	Unidrive M Connect
	SD card (using optional AI-Back-up Adaptor)
	Smart Adaptor
Onboard I/O	2 x Analog inputs, 1 x Analog output
	4 x Digital inputs, 1 x Bidirectional digital input or output
	1 x Relay output
Back-up power	24 V control back-up (using optional AI-Back-up Adaptor) AI-Smart Adaptor (built-in memory for parameter cloning and 24 V back-up)
Other	Temperature controlled fan with standby (off)
	User replaceable fan(s)
	Conformal coating IEC 60721-3-3 3C3
	Standby mode (energy saving)
	User defined security levels (e.g. restricted access or read-only parameters via user defined security code)

*Additional fixings recommended where heavy vibration is expected

Dimensions and Weight

Frame Size		1	2	3	4	5	6	7	8	9A	9E
Dimensions (H x W x D)	mm	137x75x130	180x75x150	200x90x160	245x115x175	379x141x200	379x210x227	548x270x280	785x310x290	1108x310x290	1069x310x290
	in	5.4x3.0x5.1	7.1x3.0x5.9	7.9x3.5x6.3	9.7x4.5x6.9	14.9x5.6x7.9	14.9x8.3x8.9	21.6x10.6x11.0	30.9x12.2x11.4	43.6x12.2x11.4	42.1x12.2x11.4
Weight	kg (lb)	0.75(1.65)	1.0(2.2)	1.5(3.3)	3.13(6.9)	7.4(16.3)	14(30.9)	45(99.2)	50(110.2)	66.5(146.6)	46(101.4)

Notes:
Height dimension (H) does not include mounting feet on sizes 1 to 4.
Additional distance should be added to the height dimension (H) when the following options are fitted:

- AI-Back-up Adaptor: 15 mm (0.59 in)
- AI-485 Adaptor: 26 mm (1.02 in)
- AI- Smart Adaptor: 15 mm (0.59 in)

Optional keypad

Description/Order code	Order code
Remote Keypad	82500000000001

Optional accessories

Description/Order code	Order code
AI-Back-up Adaptor	82500000000004
AI-485 Adaptor	82500000000003
AI-Smart Adaptor	82500000018500

Through hole IP65 kit

IP65 / UL TYPE 12 rating is achieved on the rear of the drive when through panel mounted using the following kits.

Frame size	Order code
5	3470-0067
6	3470-0055
7	3470-0079
8	3470-0083
9A	3470-0119
9E	3470-0105

UL Type 1 Conduit kit

Frame size	Order code
1	3470-0091
2	3470-0094
3	3470-0098
4	3470-0102
5	3470-0069
6	3470-0059
7	3470-0080
8 / 9A	3470-0088
9E	3470-0115

Retrofit mounting brackets

These mounting brackets ensure the drive can be mounted on existing Commander SK installations.

Frame size	Order code
3	3470-0097
4	3470-0101
5	3470-0066
6	3470-0074
7	3470-0078
8	3470-0088
9A / 9E	3470-0118

Line reactor

Frame size	Order code
9E (400 V)	7022-0063
9E (600 V)	7022-0063

Finger-guard grommet

Frame size	Order code
9A / 9E	3470-0107

Lifting tool

Frame size	Order code
9A	7778-0045
9E	7778-0016

Fan replacement kit

Frame size	Order code
1	3470-0092
2	3470-0095
3	3470-0099
4	3470-0103

Optional external EMC filters

Unidrive M built-in EMC filter complies with EN/IEC 61800-3. External EMC filters are required for compliance with EN/IEC 61000-6-4 as per the table below.

Frame size	Voltage	Phases	Type	Order code
1	All	1	Standard	4200-1000
	All	1	Low leakage	4200-1001
2	100 V	1	Standard	4200-2000
	200 V	1	Standard	4200-2001
		1	Low leakage	4200-2002
		3	Standard	4200-2003
		3	Low leakage	4200-2004
	400 V	3	Standard	4200-2005
		3	Low leakage	4200-2006
3	200 V	1	Standard	4200-3000
		1	Low leakage	4200-3001
		3	Standard	4200-3004
		3	Low leakage	4200-3005
	400 V	3	Standard	4200-3008
		3	Low leakage	4200-3009
4	200 V	1	Standard	4200-4000
		1	Low leakage	4200-4001
		3	Standard	4200-4002
		3	Low leakage	4200-4003
	400 V	3	Standard	4200-4004
		3	Low leakage	4200-4005
5	200 V	3	Standard	4200-0312
	400 V	3	Standard	4200-0402
	575 V	3	Standard	4200-0122
6	200 V	3	Standard	4200-2300
	400 V	3	Standard	4200-4800
	575 V	3	Standard	4200-3690
7	200 V & 400V	3	Standard	4200-1132
	575 V & 690V	3	Standard	4200-0672
8	200 V & 400V	3	Standard	4200-1972
	575 V & 690V	3	Standard	4200-1662
9	200 V & 400V	3	Standard	4200-3021
	575 V & 690V	3	Standard	4200-1660

For a full list of patents and patent applications, visit www.controltechniques.com/patents.

EMERSON. CONSIDER IT SOLVED™.

www.emersonindustrial.com/automation

EMERSON™
Industrial Automation

© Emerson 2015. The information contained in this brochure is for guidance only and does not form part of any contract. The accuracy cannot be guaranteed as Emerson have an ongoing process of development and reserve the right to change the specification of their products without notice.

Control Techniques Limited. Registered Office: The Gro, Newtown, Powys SY16 3BE. Registered in England and Wales. Company Reg. No. 01236886.

Moteurs Leroy-Somer SAS. Headquarters: Bd Marcellin Leroy, CS 10015, 16915 Angoulême Cedex 9, France. Share Capital: 65 800 512 €, RCS Angoulême 338 567 258.

P.N. 0778-0077-04 05/15

Isomax
Molded case circuit breakers
S3 – S8

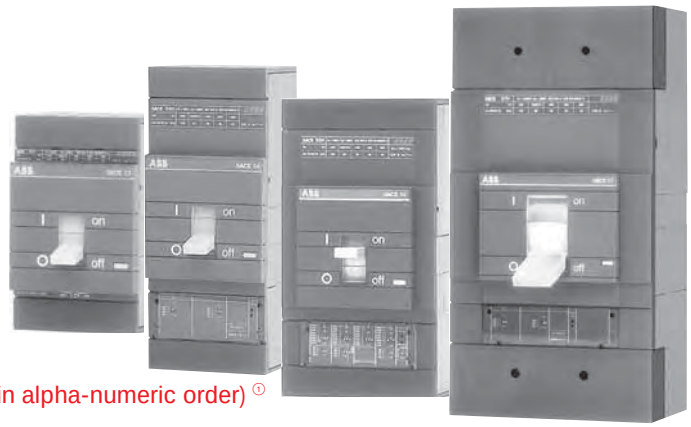

S4 N 250 B W - 2 xxx

Accessories (added in alpha-numeric order) ①

A =	Auxiliary Switch
BA =	Bell Alarm
BA3 =	Bell Alarm (S6/S7 only)
S_ =	Shunt trip with voltage code
U_ =	Undervoltage release with voltage code

Number of poles

-2 =	2 pole
4 =	4 pole
None =	3 pole

Type connectors

W = None

Trip unit function

B =	LI	**F** =	LSIG/K
C =	LSI	**H** =	LSIG/D
D =	Molded Case Switch (MCS)	**J** =	LSIG/DT
E =	LSIG	**K** =	LSIG/DTK
T =	Thermal-magnetic – 10X Mag	**M** =	Magnetic only (MCP)
G =	Thermal-magnetic – 2.5 – 5X Mag ②		

Current rating

015 =	15A
250 =	250A
400 =	400A
1200 =	1200A

Interrupting rating class

B =	Basic (240VAC)	**NQ** =	Normal, 100% rated
N =	Normal	**HQ** =	High, 100% rated
H =	High	**LQ** =	Extra High, 100% rated
L =	Extra High	**D** =	Special molded case switch
BQ =	Basic, 100% rated		

(No trip IEC)

Frame size

S3 =	150 / 225A
S4 =	250A
S5 =	400A
S6 =	600 / 800A
S7 =	1200A

① Consult ABB for factory installed accessories.
② Consult ABB for availability.

Clearwater Tech - Phone: 800.894.0412 - Fax: 208.368.0415 - Web: www.clrwtr.com - Email: info@clrwtr.com

S3
150/225A
Standard thermal-magnetic

S3B

S3N S3H S3L

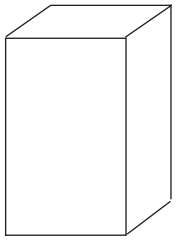
H x W x D
6.70" x 4.13" x 4.07"

Standard S3 package includes complete circuit breaker and mounting hardware. Order cable lugs as a separate item, standard copper/ aluminum (Cu/Al) lugs are no charge when ordered with breaker.

General
The S3 breaker family ranges from 15 through 225 amperes. The S3 trip mechanisms are non-interchangeable and use sensitive electromagnetic relays for overcurrent trip protection. Heat sensitive bimetals are used for thermal overcurrent protection. Short circuit current protection begins at 10 times the thermal rating of the breaker and uses a magnetic coil principle.

Versions
To meet all application needs, the S3 is available in various versions:

T =Thermal-magnetic
Q =100% UL rated
D = Molded case switch
M = Magnetic only (MCP)
G = 3X Mag (100 - 225A 3-pole only)

Performance level
Each version is also available in different maximum fault interrupting levels

B = 240VAC
N = Normal
H = High
L = Extra high

Number of poles
In UL/CSA form, the S3 is available in two pole or three pole versions, both with the same dimensions. A four pole version is also available in UL/ IEC form. For price estimate, add 35% to list price of selected version three pole breaker, contact ABB Control for details.

Accessory mounting
Internal accessories are UL/CSA approved for both factory or field installation. Accessories require control cable connectors. Shunt trips or UVR's mount in the left cavity. Auxiliary or bell alarm switches mount in the right cavity.

Reverse feeding
All versions of the S3 family are suitable for reverse feed applications.

Molded case switches
UL489 switches include no overcurrent protection except for a high instantaneous trip mechanism for self protection. IEC type molded case switches with no trip protection are also available.

UL/CSA Interrupting capacity (kA RMS)
UL489 / CSA C22.2

Voltage	N	H	L
240VAC	65	100	150
480VAC	25	50	85①
600VAC	14	14	25
500VDC	35	50	65
600VDC	20	35	50

IEC-947 Interrupting capacity (kA RMS)

Voltage	N	H	L
230VAC	65	100	170
380/400/415VAC	35	65	85
440VAC	30	50	65
500VAC	25	40	50
690VAC	14	18	20
500VDC	35	50	65
750VDC	20	35	50

① 15-30A are 65kA at 480VAC

Clearwater Tech - Phone: 800.894.0412 - Fax: 208.368.0415 - Web: www.clrwtr.com - Email: info@clrwtr.com

S3
150/225A
Standard thermal-magnetic

S3B

Breaker	IC at 240VAC	Rating	Magnetic trip	2 pole, 240VAC catalog number	List price	3 pole, 240VAC catalog number	List price
S3B	**150kA**	175A 200A 225A	1750A 2000A 2250A	S3B175TW-2 S3B200TW-2 S3B225TW-2	**$ 460**	S3B175TW S3B200TW S3B225TW	**$ 590**

S3N

Breaker	IC at 480VAC	Rating	Magnetic trip	2 pole, 600VAC/500VDC catalog number	List price	3 pole, 600VAC/DC catalog number	List price
S3N	**25kA**	15A 20A 25A 30A 35A 40A 50A 60A	500A 500A 500A 500A 500A 500A 500A 600A	S3N015TW-2 S3N020TW-2 S3N025TW-2 S3N030TW-2 S3N035TW-2 S3N040TW-2 S3N050TW-2 S3N060TW-2	**$ 316**	S3N015TW S3N020TW S3N025TW S3N030TW S3N035TW S3N040TW S3N050TW S3N060TW	**$ 413**
		70A 80A 90A 100A	700A 800A 900A 1000A	S3N070TW-2 S3N080TW-2 S3N090TW-2 S3N100TW-2	**407**	S3N070TW S3N080TW S3N090TW S3N100TW	**504**
		125A 150A 175A① 200A① 225A①	1250A 1500A 1750A 2000A 2250A	S3N125TW-2 S3N150TW-2 S3N175TW-2 S3N200TW-2 S3N225TW-2	**911**	S3N125TW S3N150TW S3N175TW S3N200TW S3N225TW	**1131**

S3H

Breaker	IC at 480VAC	Rating	Magnetic trip	2 pole, 600VAC/500VDC catalog number	List price	3 pole, 600VAC/DC catalog number	List price
S3H	**50kA**	15A 20A 25A 30A 35A 40A 50A 60A	500A 500A 500A 500A 500A 500A 500A 600A	S3H015TW-2 S3H020TW-2 S3H025TW-2 S3H030TW-2 S3H035TW-2 S3H040TW-2 S3H050TW-2 S3H060TW-2	**$ 527**	S3H015TW S3H020TW S3H025TW S3H030TW S3H035TW S3H040TW S3H050TW S3H060TW	**$ 619**
		70A 80A 90A 100A	700A 800A 900A 1000A	S3H070TW-2 S3H080TW-2 S3H090TW-2 S3H100TW-2	**617**	S3H070TW S3H080TW S3H090TW S3H100TW	**702**
		125A 150A 175A① 200A① 225A①	1250A 1500A 1750A 2000A 2250A	S3H125TW-2 S3H150TW-2 S3H175TW-2 S3H200TW-2 S3H225TW-2	**1376**	S3H125TW S3H150TW S3H175TW S3H200TW S3H225TW	**1586**

S3L

Breaker	IC at 480VAC	Rating	Magnetic trip	2 pole, 600VAC/500VDC catalog number	List price	3 pole, 600VAC/DC catalog number	List price
S3L	**65k**	15A 20A 25A 30A	500A 500A 500A 500A	S3L015TW-2 S3L020TW-2 S3L025TW-2 S3L030TW-2	**$ 634**	S3L015TW S3L020TW S3L025TW S3L030TW	**$ 824**
		35A 40A 50A 60A	500A 500A 500A 600A	S3L035TW-2 S3L040TW-2 S3L050TW-2 S3L060TW-2	**634**	S3L035TW S3L040TW S3L050TW S3L060TW	**824**
	85kA	70A 80A 90A 100A	700A 800A 900A 1000A	S3L070TW-2 S3L080TW-2 S3L090TW-2 S3L100TW-2	**816**	S3L070TW S3L080TW S3L090TW S3L100TW	**1010**
		125A 150A	1250A 1500A	S3L125TW-2 S3L150TW-2	**1818**	S3L125TW S3L150TW	**2260**
	65kA	175A① 200A① 225A①	1750A 2000A 2250A	S3L175TW-2 S3L200TW-2 S3L225TW-2	**1818**	S3L175TW S3L200TW S3L225TW	**2260**

① 480VAC maximum

Clearwater Tech - Phone: 800.894.0412 - Fax: 208.368.0415 - Web: www.clrwtr.com - Email: info@clrwtr.com

S3
150/225A
100% UL rated

S3NQ

Breaker	IC at 480VAC	Rating	Magnetic trip	3 pole 600VAC/DC catalog number	List price
S3NQ	**25kA**	15A 20A 25A 30A 35A 40A 50A 60A	500A 500A 500A 500A 500A 500A 500A 600A	S3NQ015TW S3NQ020TW S3NQ025TW S3NQ030TW S3NQ035TW S3NQ040TW S3NQ050TW S3NQ060TW	**$ 459**
		70A 80A 90A 100A	700A 800A 900A 1000A	S3NQ070TW S3NQ080TW S3NQ090TW S3NQ100TW	**560**
		125A 150A 175A① 200A① 225A①	1250A 1500A 1750A 2000A 2250A	S3NQ125TW S3NQ150TW S3NQ175TW S3NQ200TW S3NQ225TW	**1257**

S3HQ

Breaker	IC at 480VAC	Rating	Magnetic trip	3 pole catalog number	List price
S3HQ	**50kA**	15A 20A 25A 30A 35A 40A 50A 60A	500A 500A 500A 500A 500A 500A 500A 600A	S3HQ015TW S3HQ020TW S3HQ025TW S3HQ030TW S3HQ035TW S3HQ040TW S3HQ050TW S3HQ060TW	**$ 688**
		70A 80A 90A 100A	700A 800A 900A 1000A	S3HQ070TW S3HQ080TW S3HQ090TW S3HQ100TW	**780**
		125A 150A 175A① 200A① 225A①	1250A 1500A 1750A 2000A 2250A	S3HQ125TW S3HQ150TW S3HQ175TW S3HQ200TW S3HQ225TW	**1762**

S3LQ

Breaker	IC at 480VAC	Rating	Magnetic trip	3 pole catalog number	List price
S3LQ	**65kA**	15A 20A 25A 30A	500A 500A 500A 500A	S3LQ015TW S3LQ020TW S3LQ025TW S3LQ030TW	**$ 916**
	85kA	35A 40A 50A 60A	500A 500A 500A 600A	S3LQ035TW S3LQ040TW S3LQ050TW S3LQ060TW	
		70A 80A 90A 100A	700A 800A 900A 1000A	S3LQ070TW S3LQ080TW S3LQ090TW S3LQ100TW	**1123**
		125A 150A 175A① 200A① 225A①	1250A 1500A 1750A 2000A 2250A	S3LQ125TW S3LQ150TW S3LQ175TW S3LQ200TW S3LQ225TW	**2511**

Note: When applied correctly, UL tested 100% equipment rated breakers may be applied at full rating rather than on the sizing rules of the NEC where breakers and cable are sized based on actual continuous load current divided by 80%. This 100% rating can save the user the cost of larger cable or bus bar. Please consult the NEC for details and other design factors needed for this application.

① 480VAC maximum

Clearwater Tech - Phone: 800.894.0412 - Fax: 208.368.0415 - Web: www.clrwtr.com - Email: info@clrwtr.com

S3
150/225A, 600VAC

Magnetic only (MCP)

Magnetic only circuit breakers are instantaneous trip only devices which are Underwriters Laboratories Recognized. MCPs must be used with some other device that will provide overload protection.

Type	Interruption capacity	Amps	Magnetic trip	3 pole catalog number	List price
S3N	240VAC 35kA 480VAC 18kA 600VAC 10kA	3 5 10	12 – 36 20 – 60 40 – 120	S3N003MW S3N005MW S3N010MW	**$ 568**
	240VAC 35kA 480VAC 18kA 600VAC 10kA	25	100 – 300	S3N025MW	
	240VAC 75kA 480VAC 35kA 600VAC 14kA	50 100 125 150	200 – 600 400 – 1200 500 – 1500 600 – 1500	S3N050MW S3N100MW S3N125MW S3N150MW	**633** **763** **929** **929**

Type	Interruption capacity	Amps	Magnetic trip	3 pole catalog number	List price
S3L	240VAC 50kA 480VAC 25kA 600VAC 10kA	3 5 10	12 – 36 20 – 60 40 – 120	S3L003MW S3L005MW S3L010MW	**$ 710**
	240VAC 50kA 480VAC 25kA 600VAC 10kA	25	100 – 300	S3L025MW	
	240VAC 150kA 480VAC 85kA 600VAC 25kA	50 100 125 150	200 – 600 400 – 1200 500 – 1500 600 – 1500	S3L050MW S3L100MW S3L125MW S3L150MW	**710** **843** **1910** **1910**
	480VAC 65kA	200 ②	800 – 2400	S3L200MW	**1910**

Molded case switches

Type	Interruption capacity ③	Amps	Magnetic trip	3 pole catalog number	List price
S3B-D	240VAC 150KA	225	2250A	S3B225DW	**$ 410**
S3H-D	240VAC 100kA 480VAC 50kA 600VAC 14kA 500VDC 65kA 600VDC 50kA	150 225 ②	1500A 2250A	S3H150DW S3H225DW	**892** **1254**
Non-UL switches without overcurrent protection	Withstand rating				
	600VAC 6.5kA	100 160 250	none none none	S3D100W S3D160W S3D250W	**531** **892** **1393**

Connection options

Type	Wire range	Amps①	Set of 2 catalog number	List price	Set of 3 catalog number	List price
CU/AL front lugs	14AWG – 2AWG	60	K3TA-2	**$ 4**	K3TA	**$ 6**
CU/AL front lugs	14AWG – 1/0	100	K4TB-2	**4**	K4TB	**6**
CU/ALfront lugs	2AWG – 4/0	150	K4TC-2	**4**	K4TC	**6**
CU/AL front lugs	4AWG – 300kcmil	225	K4TD-2	**10**	K4TD	**15**
					Set of 6 catalog number	
CU front lugs (saddle)	14AWG – 250kcmil	250	—	—	K4TES	**30**
CU rear lugs	6AWG – 250kcmil	250	—	—	K4TER	
Extended front bar	–	250	—	—	K4ET-250	**46**

① Suggested lugs for circuit breaker up to amps shown. Cable size and type determine maximum amperage.
② 480VAC maximum.
③ With fuse or MCCB protected circuit.

Clearwater Tech - Phone: 800.894.0412 - Fax: 208.368.0415 - Web: www.clrwtr.com - Email: info@clrwtr.com

Electrical accessories
Shunt trip, undervoltage release
S3 – S7

K5S1

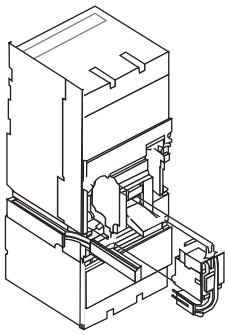
S5 with K5S2

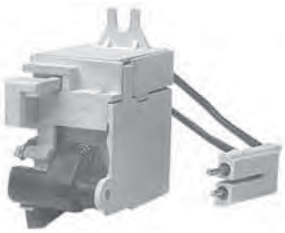
K5U1

K6C-SUP

Shunt trips

Voltage	Factory installation		Field installation		
	Catalog number suffix ①	List price adder	Catalog numbers S3 – S4 – S5	S6 – S7	List price
480VAC/250VDC	S1		K5S1	K7S1	
240VAC	S2		K5S2	K7S2	
120VAC/125VDC	S4	**$ 430**	K5S4	K7S4	**$ 415**
48VDC	S7		K5S7	K7S7	
24VAC/VDC	S8		K5S8	K7S8	
12VDC	S9		K5S9	K7S9	

Low power shunt trips

Voltage	Factory installation		Field installation		
	Catalog number suffix ①	List price adder	Catalog numbers S3 – S4 – S5	S6 – S7	List price
24VDC	SA	**$ 430**	K5SA	K7SA	**$ 415**
120VAC	SB		K5SB	K7SB	

For remote opening of circuit breaker and includes internal cut-off switch to protect solenoid. All shunt trips are left pole mounted and can not be used with UVRs. Except for 12VDC, all shunt trips are approved for use in GF systems. Shunt trips must be ordered with correct connector.

Shunt trip connectors (required)

Type circuit breaker	Voltage	Factory installation ①	Field kit catalog number S3 – S4 – S5 – S6	S7	List price
Fixed mounted	All	included	K6C-SU	K7C-SU	**$ 15**
Plug-in/Draw-out	All	included	K6C-SUP	K7C-SUP	

Electrical specifications – shunt trips (standard)

V	24, 120, 240, 480VAC ~ 50/60 Hz 12, 24, 48, 125, 250 VDC –
For S3-S5 P For S6-S7	100 VA~/120W– Instantaneous duty 150 VA~/150W–

Undervoltage releases

Voltage	Factory installation		Field installation		
	Catalog number suffix ①	List price adder	Catalog numbers S3 – S4 – S5	S6 – S7	List price
480VAC	U1		K5U1	K7U1	
240VAC	U2		K5U2	K7U2	
120VAC	U4		K5U4	K7U4	
24VAC	U3	**$ 430**	K5U3	K7U3	**$ 415**
250VDC	U5		K5U5	K7U5	
125VDC	U6		K5U6	K7U6	
48VDC	U7		K5U7	K7U7	
24VDC	U8		K5U8	K7U8	

Will trip CB when connected voltage drops to 35-70% of UVR voltage rating. Will allow CB to close (ON) when voltage is approximately 85% of rated voltage. All UVRs are left pole mounted and can not be used with shunt trips. UVRs must be ordered with correct connector.

Undervoltage release connectors (required)

Type circuit breaker	Voltage	Factory installation ①	Field kit catalog number S3 – S4 – S5 – S6	S7	List price
Fixed mounted	All	included	K6C-SU	K7C-SU	**$ 15**
Plug-in/Draw-out	All	included	K6C-SUP	K7C-SUP	

Electrical specifications – UVR & low power shunt trips

V	24, 120, 240, 480 VAC ~ 50/60 Hz 24, 48, 125, 250 VDC –
For S3-S5 P For S6-S7	6 VA~/3W– Continuous duty 10 VA~/4W–

① For factory installation add suffix given to end of circuit breaker catalog number per accessory format.

Clearwater Tech - Phone: 800.894.0412 - Fax: 208.368.0415 - Web: www.clrwtr.com - Email: info@clrwtr.com

Electrical accessories
Auxiliary contacts
S3 – S7

K5AS

K6C-ABP

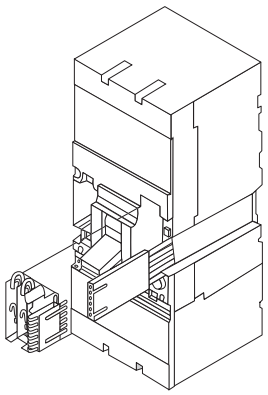
S5 with K6C-AB

Auxiliary contacts — S3 – S7

Contacts	Factory installation		Field installation		
	Catalog number suffix ①	List price adder	Catalog numbers S3 – S4 – S5	Catalog numbers S6 – S7	List price
2 Form Cs	A	**$ 275**	K5AS	K7AS	**$ 260**
1 BA & 1 C 1 B BA & 1A+1B	BA BA3	**365**	K5BA —	K7BA K7BA-3	**350**

The auxiliary contacts are accessory contacts for the indication of circuit breaker open-closed or tripped. Bell alarm contacts (B.A.) can be used to indicate circuit breaker tripping. All contacts are right pole mounted.

Auxiliary contact connectors (required) — S3 – S7

Type circuit breaker	Voltage	Factory installation①	Field kit catalog number S3 – S4 –- S5 – S6	Field kit catalog number S7	List price
Fixed mounted Plug-in/Draw-out	All All	included included	K6C-AB K6C-ABP	K7C-AB K7C-ABP	**$ 15**

Electrical specifications

Voltage	Maximum contact amperage rating
125 VDC	0.3 A
250 VDC	0.15 A
250 VAC	6 A

N.O. = contact is open as circuit breaker is open
N.C. = contact is closed when circuit breaker is open
B.A. = will open/close only when circuit breaker trips

① For factory installation add suffix given to end of circuit breaker catalog number per accessory format.
② Not UL approved for field installation.

Clearwater Tech - Phone: 800.894.0412 - Fax: 208.368.0415 - Web: www.clrwtr.com - Email: info@clrwtr.com

Electrical accessories
Motor operators, stored energy motor operators S3 – S7

K5M2

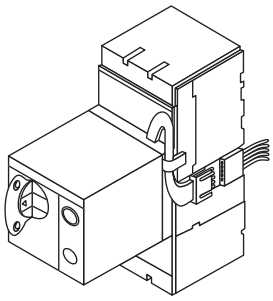
S4 with K5M2

K6C-M

K6M2

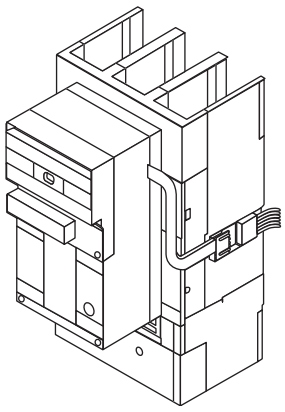
S7 with K7M4

Motor operator

Voltage	Catalog number S3 – S4 – S5	List price
240VAC/250VDC 120VAC/125VDC 48VDC 24VDC	K5M2 K5M4 K5M7 K5M8	**$ 678**

For remote control of circuit breaker opening and closing.
Complete with manual operating lever, padlock device and emergency opening push-button.
When ordering the connector always specify type and version of the circuit-breaker.
The following options are also available:
– key lock for open position
– key lock for open position of two or more circuit breakers (using the same key for groups of circuit breakers)

Motor operator connectors (required)

Type circuit breaker	Voltage	Field kit catalog number S3 – S4 – S5	List price
Fixed mounted Plug-in/Draw-out	All All	K6C-M K6C-MP	**$ 15**

Electrical specifications

V	120, 240VAC ~ 50/60 Hz 24, 48, 125, 250 VDC –
P inrush P normal Close time	500 VA~/500W– 350 VA~/500W– 0.1 s
Open time	0.1 s

Stored-energy motor operator

Voltage	Catalog number S6	Catalog number S7	List price
240VAC/250VDC 120VAC/125VDC 48VDC 24VDC	K6M2 K6M4 K6M7 K6M8	K7M2 K7M4 K7M7 K7M8	**$ 2407**

• Stored-energy motor operator with springs automatically pre-loaded by motor.
• Complete with shunt opening and closing release, and compartment door flange.
• When ordering the connector always specify type and version of the circuit-breaker.
• The following options are also available:
  – key lock for open position
  – key lock for open position of two or more circuit-breakers (using the same key for groups of circuit-breakers).

Stored-energy motor operator connectors (required)

Type circuit breaker	Voltage	Field kit catalog number S6	Field kit catalog number S7	List price
Fixed mounted Plug-in/Draw-out	All All	K6C-M K6C-MP	K7C-M K7C-MP	**$ 15**

Electrical specifications

V	120, 240 VAC ~ 50/60 Hz 24, 48, 125, 250 VDC –
P inrush P normal Close time	660 VA~/600W– 180 VA~/180W– 0.09 s
Open time	1.2 s
Reset time	2.0 s

Clearwater Tech - Phone: 800.894.0412 - Fax: 208.368.0415 - Web: www.clrwtr.com - Email: info@clrwtr.com

External accessories
Lugs and termination kits
S3 – S7

K4TB

K4ET-250

K4TES

K4TER

K4TN

Standard cable lug kits

For breakers	Amps①	Wire range	Set of 2 catalog number	List price	Set of 3 catalog number	List price
S3	60	14AWG – 2AWG	K3TA-2	**$ 4**	K3TA	**$ 6**
S3 – S4	100	14AWG – 1/0	K4TB-2	**4**	K4TB	**6**
S3 – S4	150	2AWG – 4/0	K4TC-2	**4**	K4TC	**6**
S3 – S4 – S5	225	4AWG – 300kcmil	K4TD-2	**10**	K4TD	**15**
S4	250	6AWG – 350kcmil	K4TE-2	**20**	K4TE	**30**
S5	300	250kcmil – 500kcmil	K5TF-2	**30**	K5TF	**45**
S5	400	(2) 3/0 – 250kcmil	K5TG-2②	**30**	K5TG②	**45**
S6	600	(2) 250kcmil – 500kcmil	K6TH-2	**50**	K6TH	**75**
S6	800	(3) 2/0 – 400kcmil	K6TJ-2②	**90**	K6TJ②	**135**
S7	1200	(4) 4/0 – 500kcmil	K7TK-2	**120**	K7TK	**180**

Standard cable lugs, for use on line and load side of circuit breaker. Suitable for use with Cu or Al. Special versions available with taps and screws for control wire connection. Note: S6 and S7 lugs are Al9Cu (90°C); all others Al7Cu (75°C).

Standard cable lug kits with control power taps

For breakers	Amps①	Wire range	Set of 2 catalog number	List price	Set of 3 catalog number	List price
S3 – S4	100	14AWG – 1/0	K4TB-2C	**$ 8**	K4TBC	**$ 12**
S3 – S4	150	2AWG – 4/0	K4TC-2C	**8**	K4TCC	**12**
S3 – S4 – S5	225	4AWG – 300kcmil	K4TD-2C	**14**	K4TDC	**21**
S4	250	6AWG – 350kcmil	K4TE-2C	**24**	K4TEC	**36**
S5	300	250kcmil – 500kcmil	K5TF-2C	**34**	K5TFC	**51**
S5	400	(2) 3/0 – 250kcmil	K5TG-2C②	**34**	K5TGC②	**51**
S6	600	(2) 250kcmil – 500kcmil	K6TH-2C	**54**	K6THC	**81**
S6	800	(3) 2/0 – 400kcmil	K6TJ-2C②	**94**	K6TJC②	**141**
S7	1200	(4) 4/0 – 500kcmil	K7TK-2C	**124**	K7TKC	**186**

Extended front termination kits

Suitable for use with	Maximum amps	Set of 6 catalog number	List price
S3 – S4	250	K4ET-250	**$ 46**
S5	400	K5ET-400	**114**
S6	630	K6ET-600	**150**
S6	800	K6ET-800	**170**
S7	1250	K7ET-1250	**240**

For adding onto standard circuit breaker front terminals, extending available connection area for user termination. Suitable for spaded cable or bus connection. S3 – S5 include terminal covers.

Saddle cable lug kits (Cu cable only)

Suitable for use with	Max amps	Wire range	Set of 6 catalog number	List price
S3 – S4	250	14AWG – 250kcmil	K4TES	**$ 30**
S5	400	250kcmil – 500kcmil	K5TGS	**90**

These special non-aluminum cable lugs are for use with copper cable. Lugs are intended for use with copper cable or where non-aluminum connectors are required (marine, salt or corrosive environments).

Rear cable lug kits (Cu cable only)

Suitable for use with	Max amps	Wire range	Set of 6 catalog number	List price
S3 – S4	250	6AWG – 250kcmil	K4TER	**$ 30**
S5	400	250kcmil – 500kcmil	K5TGR	**90**
S6	600	(2) 2/0 – 350kcmil	K6THR	**150**
S6	800	(3) 250kcmil – 350kcmil	K6TJR	**170**

For use where cable connection from the back-rear of the breaker is desired.

Distribution cable lug kit

Suitable for use with	Max amps	Wire range	Set of 3 catalog number	List price
S3 – S4	250	(6) #14 - 6	K4TN	**$ 125**
S5	400	(6) #14 - 1/0	K5TGD	**240**

① Suggested lugs for circuit breaker up to amps shown. Cable size and type determine maximum amperes.
② Includes required lug covers.

Clearwater Tech - Phone: 800.894.0412 - Fax: 208.368.0415 - Web: www.clrwtr.com - Email: info@clrwtr.com

External accessories
Rotary and variable depth handle operators S3– S7

K5RH

OHB65J10

OHB95J10

OHB125J10

K5VD-M, K5VD-S12, K5VD-H

Rotary handle operating mechanism

Frame	Catalog number	List price
S3 – S4 – S5	K5RH	**$ 108**
S6	K6RH	**124**
S7	K7RH	**145**

Mounts directly onto breaker. Includes door interlock to prevent CB door opening while CB is in ON position. Padlock provision included to padlock CB in open position. Can also be key locked with optional cylinder lock assembly. Door interlock bracket must be ordered separately, if required. See page 15.62.

Variable depth rotary handles

New pistol type 1, 3R, 12

Frame	Catalog number mechanism	List price	Shaft catalog number (length in inches)	List price	Handle catalog number (length in inches)	List price
S3–S4–S5	K5VD-M	**49**	OXP10X148 (5.8)	**$ 24 26 32**	OHB95J10 (3.7) OHG95J10 (3.7)	**80**
S6	K6VD-M	**80**	OXP10X225 (8.9) OXP10X500 (19.7)		OHB125J10 (4.9) OHG125J10 (4.9)	**90**
S7	K7VD-M	**80**			OHB175J10 (6.9) OHG175J10 (6.9)	**100**

Pistol type 4, 4X

Frame	Catalog number mechanism	List price	Shaft catalog number (length in inches)	List price	Handle catalog number (length in inches)	List price
S3–S4–S5	K5VD-M	**49**	OXP10X148 (5.8)	**$ 24 26 32**	OHB95L10 (3.7) OHG95L10 (3.7)	**120**
S6	K6VD-M	**80**	OXP10X225 (8.9) OXP10X500 (19.7)		OHB125L10 (4.9) OHG125L10 (4.9)	**130**
S7	K7VD-M	**80**			OHB175L10 (6.9) OHG175L10 (6.9)	**140**

Square type 1

S3–S4–S5	K5VD-M	**49**	K5VD-S12	**$ 24**	K5VD-H	$ **25**
S6	K6VD-M	**80**	K7VD-S20	**27**	K7VD-H	**28**
S7	K7VD-M	**80**			K7VD-H	**28**

NOTE: Complete assembly requires a mechanism, shaft and handle.

Variable depth shaft support

For frames	Catalog number	List price
S3 – S4 – S5	K5VD-LSS	**$ 25**

New pistol handle catalog number explanation

OHB 125 J 10

- 10 — Shaft size (diameter in mm)
- J — J = Type 1, 3R, 12; L = Type 1, 3R, 4, 4X, 12
- 125 — Physical size (length in mm)
- OHB — Color: B = black, G = gray, Y = yellow / red

Clearwater Tech - Phone: 800.894.0412 - Fax: 208.368.0415 - Web: www.clrwtr.com - Email: info@clrwtr.com

External accessories
Flange handle operators
S3 – S6

K7FHD-HS12

Flange handle
Solid shaft linkage

Breaker	NEMA type	Complete handle kit	List price	Mechanism only	List price	Shaft only	Shaft length	List price	Handle only	List price
S3	1,3R,12	K3FHD-12S12 K3FHD-17S12 K3FHD-22S12	**240** **248** **255**	K3FHD-M	**128**	K7FHD-S12 K7FHD-S17 K7FHD-S22	12 17 22.5	**19** **27** **34**	K7FHD-HS12	**93**
	4, 4X	K3FHD-12S4 K3FHD-17S4 K3FHD-22S4	**280** **288** **295**			K7FHD-S12 K7FHD-S17 K7FHD-S22	12 17 22.5	**19** **27** **34**	K7FHD-HS4	**133**
S4	1,3R,12	K4FHD-12S12 K4FHD-17S12 K4FHD-22S12	**240** **248** **255**	K4FHD-M	**128**	K7FHD-S12 K7FHD-S17 K7FHD-S22	12 17 22.5	**19** **27** **34**	K7FHD-HS12	**93**
	4, 4X	K4FHD-12S4 K4FHD-17S4 K4FHD-22S4	**280** **288** **295**			K7FHD-S12 K7FHD-S17 K7FHD-S22	12 17 22.5	**19** **27** **34**	K7FHD-HS4	**133**
S5	1,3R,12	K5FHD-12S12 K5FHD-17S12 K5FHD-22S12	**240** **248** **255**	K5FHD-M	**128**	K7FHD-S12 K7FHD-S17 K7FHD-S22	12 17 22.5	**19** **27** **34**	K7FHD-HS12	**93**
	4, 4X	K5FHD-12S4 K5FHD-17S4 K5FHD-22S4	**280** **288** **295**			K7FHD-S12 K7FHD-S17 K7FHD-S22	12 17 22.5	**19** **27** **34**	K7FHD-HS4	**133**
S6	1,3R,12	K6FHD-12S12 K6FHD-17S12 K6FHD-22S12	**523** **531** **538**	K6FHD-M	**411**	K7FHD-S12 K7FHD-S17 K7FHD-S22	12 17 22.5	**19** **27** **34**	K7FHD-HS12	**93**
	4, 4X	K6FHD-12S4 K6FHD-17S4 K6FHD-22S4	**563** **571** **578**			K7FHD-S12 K7FHD-S17 K7FHD-S22	12 17 22.5	**19** **27** **34**	K7FHD-HS4	**133**

Available as complete kits including flange handle, shaft and breaker operating mechanism. Mechanism mounts directly onto breaker and shaft can be cut to the desired length for the breaker enclosure. Door is interlocked with the handle when the breaker is in the closed (ON) position; handles include interlock defeater for emergency override. Handle can be padlocked in the open (OFF) position. Can be field converted for left hand mounting.

Door hardware kits — Solid shaft linkage & cable operated

Item	Catalog number	List price
Door hardware kit, right hand, 2 point latch for enclosures less than 40 inches high	FH-DHK	**$ 150**
Roller for 3 point latch, add to FH-DHK	FH-3RL	**30**

Enclosure depths
Minimum

Breaker	Depth (inches)
S3 - S5	10
S6	11

Maximum

For maximum depth, add 4 inches to the shaft length

① Cable not included.

External accessories
Flange handle operators
S3 – S7

K7FCH

Flange handle
Cable linkage

Breaker	NEMA type	Mechanism only	List price	Cable only	Cable length	List price	Handle only	List price
S3-S4	1,3R,12	K4FPM	**110**	K5C036	36" (91cm)	**114**	K5FCH	**213**
				K5C048	48" (122cm)	**146**		
	4, 4X	K4FPM	**110**	K5C060	60" (152cm)	**160**	K5FCH4	**243**
				K5C072	72" (183cm)	**175**		
S5	1,3R,12	K5FPM	**128**	K5C084	84" (213cm)	**204**	K5FCH	**213**
				K5C096	96" (244cm)	**221**		
	4, 4X	K5FPM	**128**	K5C108	108" (274cm)	**238**	K5FCH4	**243**
				K5C120	120" (305cm)	**256**		
S6	1,3R,12	K6FPM	**220**	K7C048	48" (122cm)	**190**	K7FCH	**310**
	4, 4X	K6FPM	**220**	K7C060	60" (152cm)	**220**	K7FCH4	**415**
				K7C072	72" (183cm)	**256**		
S7	1,3R,12	K7FPM	**220**	K7C084	84" (213cm)	**270**	K7FCH	**310**
				K7C096	96" (244cm)	**320**		
	4, 4X	K7FPM	**220**	K7C120	120" (305cm)	**350**	K7FCH4	**415**

Notes: For complete assembly; mechanism, cable and handle are required.
All cables mount onto the right side of the breaker.
Handle can be mounted on the right or left side.

Door hardware kits — S3 - S7 Cable operated

Item	Catalog number	List price
Door hardware kit, right hand, 2 point latch for enclosures less than 40 inches high	KDH2R	**$ 200**
Door hardware kit, right hand, 3 point latch for enclosures 40 inches high or greater	KDH3R	**225**

Enclosure depths
Minimum

Breaker	Depth (inches)
S3 - S6	8
S7	10

Maximum
Maximum depth is determined by cable length.

Clearwater Tech - Phone: 800.894.0412 - Fax: 208.368.0415 - Web: www.clrwtr.com - Email: info@clrwtr.com

MPDB Series Open-Style Power Distribution Blocks

The Next Generation Power Distribution Block (PDB)

Available Now!

Mersen power distribution blocks provide a safe and easy method of splicing cables, splitting primary power into secondary circuits and fulfilling requirements for fixed junction tap-off points. All blocks are UL and CSA approved while meeting spacing requirements for feeder and branch circuits in conjunction with UL508A and the National Electrical Code®. PDB options include single or dual conductor primary inputs and up to 30 secondary outputs. Specialty blocks are available allowing for up to 7 primary inputs. The MPDB series is offered in three size categories: miniature (MPDB62 and MPDB63 series), intermediate (MPDB66 and MPDB67 series), and large (MPDB68 and MPDB69 series), in both aluminum and copper.

Features/Benefits:

- **Adder Poles**
  All sizes have optional adder poles for increased flexibility and ease-of-use. Adder poles can be stacked to form multi-pole units in the field without the use of tools. Adder poles allow for customization of primary and secondary wire combinations. End barriers are also available for sale, catalog numbers can be found in the catalog number selection tables for each size block.
- **Wire Connectors**
  Standard aluminum and copper wire connectors are available. Aluminum connectors accept both AL or CU wire while copper connectors accept CU wire only. Connectors are all 1-piece tin-plated.
- **Insulators**
  Insulators are virtually unbreakable, made of glass-filled polycarbonate. “See-through,” hinged safety covers are optional and provide a greater degree of safety and shock resistance where required. Hinged covers can be installed without tools.
- **Spacings**
  1 inch through air and 2 inches over surface between uninsulated live parts of opposite polarity meets requirements for feeder and branch circuit applications of UL508A.
- **Safety Covers**
  Polycarbonate safety covers provide dead-front protection. One cover is needed for each pole. Each cover has a test probe hole in the center for circuit checking. Covers are optional accessories and catalog numbers can be found in the catalog selection tables for each size block.

Additional Specifications:

Wire Type:	Copper Blocks: 60/75ºC Solid/Stranded CU Aluminum Blocks: 60/75/90ºC Solid/Stranded AL and CU
Connector:	Copper Blocks: Highly conductive tin-plated copper Aluminum Blocks: Highly conductive tin-plated aluminum
Insulating Material:	Glass-filled polycarbonate with verified dielectric strength in excess of 2500V
Flammability:	UL94-V0
Mounting:	Direct panel mount
Environmental:	RoHS compliant, Lead Free

Ratings:

Volts : 600VAC/DC

Amps : 65 to 2260A based on NEC table 310.15(B)(16) 75ºC ampacities

SCCR : 100kA with properly sized fuse

(See Mersen’s PDB SCCR guide at ep-us.mersen.com or contact Mersen technical services)

Approvals:

- UL Listed to subject 1953, File E352417
- CSA Certified Class 6228 01

UL LISTED RoHS 2002/95/EC

MERSEN

MPDB Series Open-Style Power Distribution Blocks

Dimensions

Miniature (MPDB63133 shown for reference)

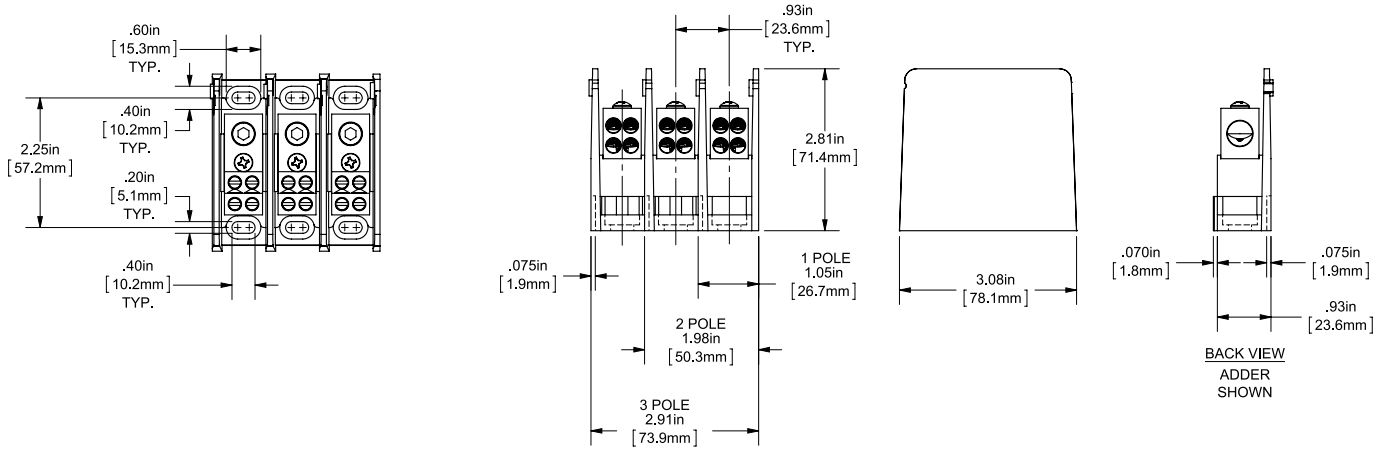

Intermediate (MPDB67563 shown for reference)

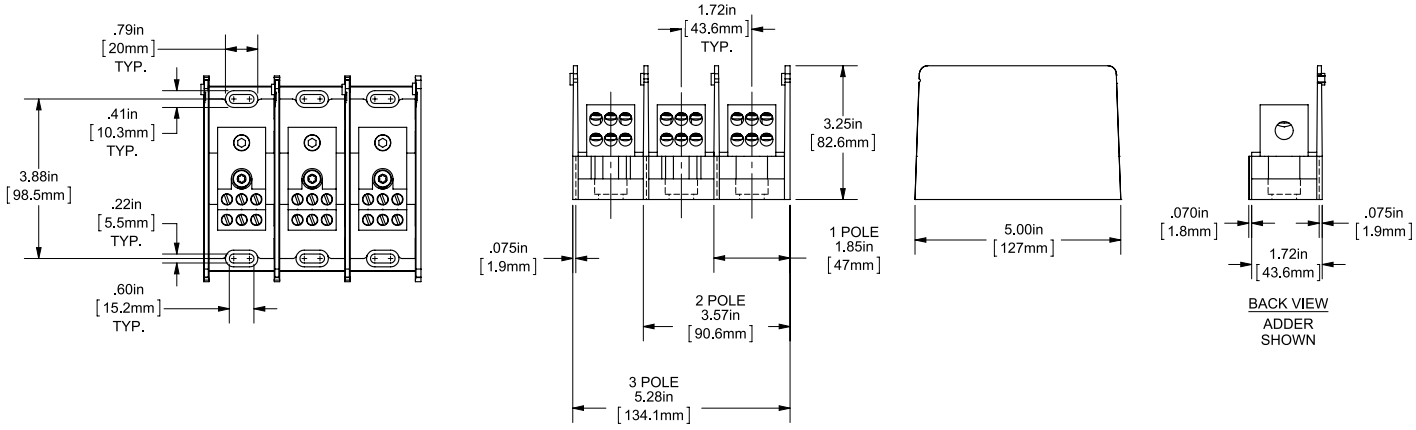

Large (MPDB69123 shown for reference)

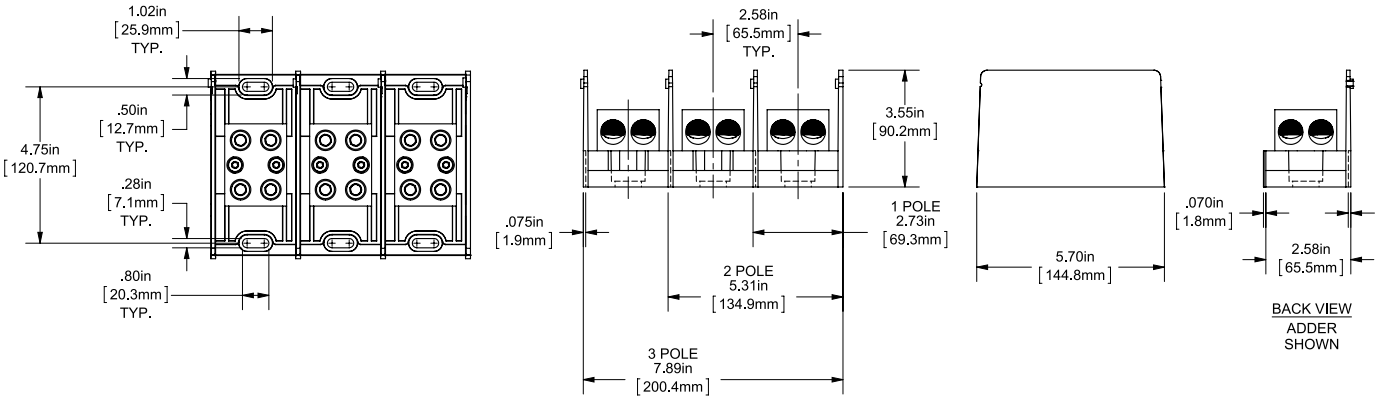

MPDB62 and MPDB63 Open-Style PDBs

Catalog Numbers (Miniature)

Line		Load		Catalog Numbers - Aluminum				Catalog Numbers - Copper				Amp Rating per Pole	
				Number of Poles				Number of Poles					
Wire Range	Openings per Pole	Wire Range	Openings per Pole	ADDER	1-P	2-P	3-P	ADDER	1-P	2-P	3-P	Al	Cu
Box-Box Configuration													
4 - 14	1	4 - 14	1	MPDB63100	MPDB63101	MPDB63102	MPDB63103	MPDB62100	MPDB62101	MPDB62102	MPDB62103	65	85
			4	MPDB63160	MPDB63161	MPDB63162	MPDB63163	MPDB62160	MPDB62161	MPDB62162	MPDB62163		
2/0 - 14	1	2/0 - 14	1	MPDB63150	MPDB63151	MPDB63152	MPDB63153	MPDB62150	MPDB62151	MPDB62152	MPDB62153	135	175
		2 - 14	2	MPDB63190	MPDB63191	MPDB63192	MPDB63193	MPDB62190	MPDB62191	MPDB62192	MPDB62193		
		4 - 14	4	MPDB63130	MPDB63131	MPDB63132	MPDB63133	MPDB62130	MPDB62131	MPDB62132	MPDB62133		
Box-Stud Configuration													
2/0 - 14	1	1/4-20 x 5/8	1	MPDB63140	MPDB63141	MPDB63142	MPDB63143	-	-	-	-	135	175
Stud-Stud Configuration													
1/4-20 x 5/8	1	1/4-20 x 5/8	1	-	-	-	-	MPDB62200	MPDB62201	MPDB62202	MPDB62203	240	240

Hinged Safety Cover for MPDB62 and MPDB63 series: Catalog number **MPDBC6263**
End Barrier for MPDB62 and MPDB63 series: Catalog Number **MPDBE6263**

Adder Pole Installation Instructions

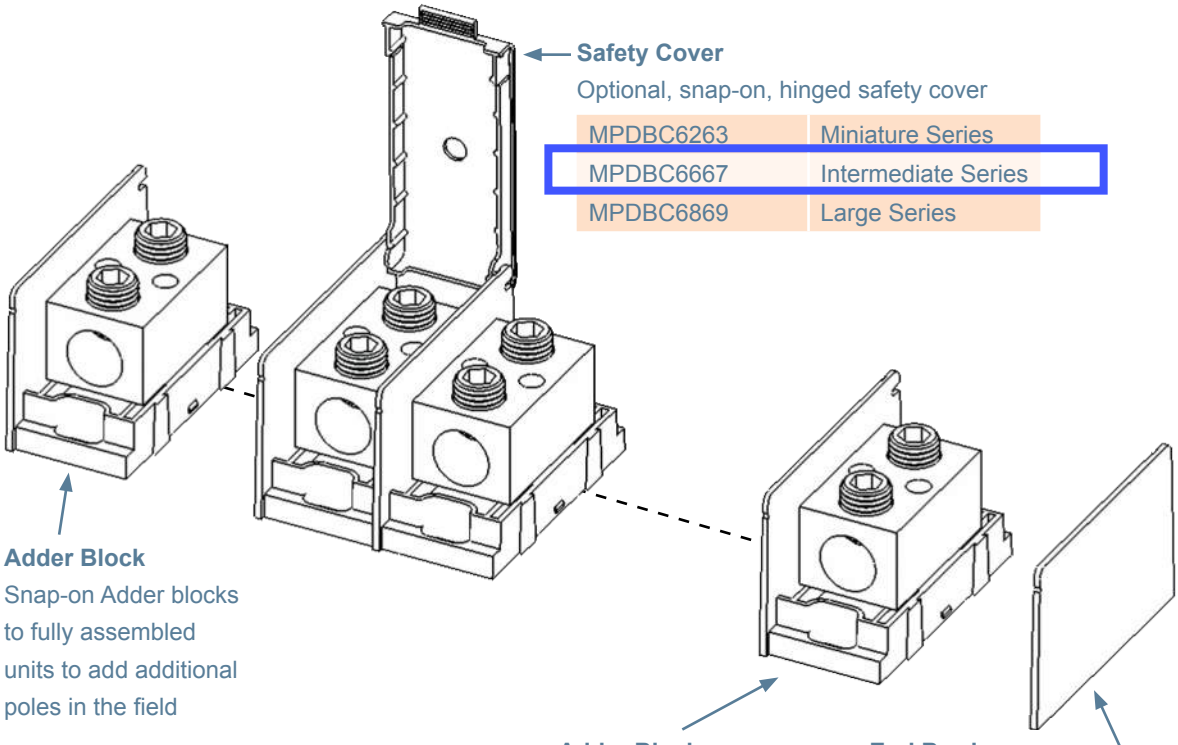

Safety Cover
Optional, snap-on, hinged safety cover

MPDBC6263	Miniature Series
MPDBC6667	Intermediate Series
MPDBC6869	Large Series

Adder Block
Snap-on Adder blocks to fully assembled units to add additional poles in the field

Adder Block
Field assemble Adder blocks to form multi-pole units.

End Barrier
Snap-on to Adder block to complete assembly.

MPDBE6263	Miniature Series
MPDBE6667	Intermediate Series
MPDBE6869	Large Series

For the most current product performance data visit ep-us.mersen.com and use catalog search.

MPDB66 and MPDB67 Open-Style PDBs

Catalog Numbers (Intermediate)

Line		Load		Catalog Numbers - Aluminum Number of Poles				Catalog Numbers - Copper Number of Poles				Amp Rating per Pole	
Wire Range	Openings per Pole	Wire Range	Openings per Pole	ADDER	1-P	2-P	3-P	ADDER	1-P	2-P	3-P	Al	Cu
Box-Box Configuration													
2/0 - 14	1	2/0 - 14	1	MPDB67050	MPDB67051	MPDB67052	MPDB67053	MPDB66050	MPDB66051	MPDB66052	MPDB66053	135	175
		2 - 14	4	MPDB67570	MPDB67571	MPDB67572	MPDB67573	MPDB66570	MPDB66571	MPDB66572	MPDB66573		
		2 - 14	6	MPDB67560	MPDB67561	MPDB67562	MPDB67563	MPDB66560	MPDB66561	MPDB66562	MPDB66563		
		2 - 14	8	MPDB67580	MPDB67581	MPDB67582	MPDB67583	MPDB66580	MPDB66581	MPDB66582	MPDB66583		
		6 - 14	10	MPDB67590	MPDB67591	MPDB67592	MPDB67593	MPDB66590	MPDB66591	MPDB66592	MPDB66593		
		10 - 14	12	MPDB67110	MPDB67111	MPDB67112	MPDB67113	MPDB66110	MPDB66111	MPDB66112	MPDB66113		
350 - 6	1	350 - 6	1	MPDB67000	MPDB67001	MPDB67002	MPDB67003	MPDB66000	MPDB66001	MPDB66002	MPDB66003	250	310
		2/0 - 14	2	MPDB67010	MPDB67011	MPDB67012	MPDB67013	MPDB66010	MPDB66011	MPDB66012	MPDB66013		
		2 - 14	4	MPDB67670	MPDB67671	MPDB67672	MPDB67673	MPDB66670	MPDB66671	MPDB66672	MPDB66673		
		2 - 14	6	MPDB67660	MPDB67661	MPDB67662	MPDB67663	MPDB66660	MPDB66661	MPDB66662	MPDB66663		
		2 - 14	8	MPDB67630	MPDB67631	MPDB67632	MPDB67633	MPDB66630	MPDB66631	MPDB66632	MPDB66633		
		6 - 14	10	MPDB67650	MPDB67651	MPDB67652	MPDB67653	MPDB66650	MPDB66651	MPDB66652	MPDB66653		
		10 - 14	15	MPDB67620	MPDB67621	MPDB67622	MPDB67623	MPDB66620	MPDB66621	MPDB66622	MPDB66623		
500 - 4	1	500 - 4	1	MPDB67400	MPDB67401	MPDB67402	MPDB67403	MPDB66400	MPDB66401	MPDB66402	MPDB66403	310	380
		350-6 & 2-14	1 & 3	MPDB67450	MPDB67451	MPDB67452	MPDB67453	MPDB66450	MPDB66451	MPDB66452	MPDB66453		
		4/0 - 10	2	MPDB67420	MPDB67421	MPDB67422	MPDB67423	-	-	-	-		
		2/0 - 14	4	MPDB67410	MPDB67411	MPDB67412	MPDB67413	MPDB66410	MPDB66411	MPDB66412	MPDB66413		
		2 - 14	6	MPDB67460	MPDB67461	MPDB67462	MPDB67463	MPDB66460	MPDB66461	MPDB66462	MPDB66463		
		2 - 14	8	MPDB67430	MPDB67431	MPDB67432	MPDB67433	-	-	-	-		
		6 - 14	10	MPDB67480	MPDB67481	MPDB67482	MPDB67483	-	-	-	-		
		10-14	18	MPDB67490	MPDB67491	MPDB67492	MPDB67493	MPDB66490	MPDB66491	MPDB66492	MPDB66493		
2/0 - 14	2	2/0 - 14	2	MPDB67020	MPDB67021	MPDB67022	MPDB67023	MPDB66020	MPDB66021	MPDB66022	MPDB66023	270	350
		2 - 14	6	MPDB67510	MPDB67511	MPDB67512	MPDB67513	MPDB66510	MPDB66511	MPDB66512	MPDB66513		
		2 - 14	8	MPDB67610	MPDB67611	MPDB67612	MPDB67613	MPDB66610	MPDB66611	MPDB66612	MPDB66613		
		6 - 14	10	MPDB67530	MPDB67531	MPDB67532	MPDB67533	MPDB66530	MPDB66531	MPDB66532	MPDB66533		
		10 - 14	15	MPDB67550	MPDB67551	MPDB67552	MPDB67553	MPDB66550	MPDB66551	MPDB66552	MPDB66553		
4/0 - 6	2	4/0 - 10	2	MPDB67520	MPDB67521	MPDB67522	MPDB67523	MPDB66520	MPDB66521	MPDB66522	MPDB66523	360	460
		2 - 14	6	MPDB67540	MPDB67541	MPDB67542	MPDB67543	MPDB66540	MPDB66541	MPDB66542	MPDB66543		
Box-Stud Configuration													
350 - 6	1	3/8-16 x 1-1/16	1	MPDB67250	MPDB67251	MPDB67252	MPDB67253	-	-	-	-	250	310
500 - 4	1	3/8-16 x 1-1/16	1	MPDB67220	MPDB67221	MPDB67222	MPDB67223	-	-	-	-	310	380
Stud-Stud Configuration													
1/4-20 x 1-5/16	1	1/4-20 x 1-5/16	1	-	-	-	-	MPDB66270	MPDB66271	MPDB66272	MPDB66273	155	155
3/8-16 x 1-1/8	1	1/4-20 x 1-5/16	2	-	-	-	-	MPDB66230	MPDB66231	MPDB66232	MPDB66233	400	400
		3/8-16 x 1-1/8	1	-	-	-	-	MPDB66260	MPDB66261	MPDB66262	MPDB66263		

Hinged Safety Cover for MPDB66 and MPDB67 series: Catalog number **MPDBC6667**

End Barrier for MPDB66 and MPDB67 series: Catalog Number **MPDBE6667**

ATDR

TIME DELAY/CLASS CC

THE BEST PROTECTION FOR TODAY'S SMALL MOTORS.

Amp-trap 2000® ATDR small-dimension fuses can provide IEC Type 2 "no damage" protection to your facility's increasingly sensitive branch circuit components and small motors – minimizing the risk of fault-related damage. ATDR Class CC fuses deliver the best time delay characteristics in their class with excellent cycling ability for small motor loads.

Features/Benefits

- **Time delay** for motor starting inrush currents without nuisance opening
- **Highly current limiting** for low peak let-thru current
- **Improved cycling ability** for frequent motor starts/stops without nuisance fuse opening
- **Rejection-style design** prevents replacement errors (when used with recommended fuse blocks)
- **High-visibility orange label** ensures instant recognition, simplifies replacement
- **Metal-embossed date and catalog number** for traceability and lasting identification
- **Fiberglass body** provides dimensional stability in harsh industrial settings
- **High-grade silica filler** ensures fast arc quenching and optimum current limitation

HIGHLIGHTS:

- Time Delay
- Best Choice for Small Motor Protection
- Highly Current-Limiting
- AC & DC Rated

APPLICATIONS:

- Small Motors
- Contactors
- Lighting, Heating & General Loads
- Branch Circuit Protector

Ratings

- **AC:** 1/4 to 30A 600VAC, 200kA I.R.
- **DC:** 1/4 to 30A 300VDC, 100kA I.R.

Approvals

- UL Listed to Standard 248-4 File 2137
- CSA Certified to Standard C22.2 No. 248.4
- DC Listed to UL Standard 248

Gross Automation (877) 268-3700 · www.ferrazshawmutsales.com · sales@grossautomation.com

TIME DELAY/CLASS CC FUSES

ATDR

Standard Fuse Ampere Ratings, Catalog Numbers

AMPERE RATING	CATALOG NUMBER	AMPERE RATING	CATALOG NUMBER	AMPERE RATING	CATALOG NUMBER	AMPERE RATING	CATALOG NUMBER	AMPERE RATING	CATALOG NUMBER
1/4	ATDR1/4	1-1/2	ATDR1-1/2	3	ATDR3	6	ATDR6	12	ATDR12
1/2	ATDR1/2	1-6/10	ATDR1-6/10	3-2/10	ATDR3-2/10	6-1/4	ATDR6-1/4	15	ATDR15
8/10	ATDR8/10	1-8/10	ATDR1-8/10	3-1/2	ATDR3-1/2	7	ATDR7	17-1/2	ATDR17-1/2
1	ATDR1	2	ATDR2	4	ATDR4	7-1/2	ATDR7-1/2	20	ATDR20
1-1/8	ATDR1-1/8	2-1/4	ATDR2-1/4	4-1/2	ATDR4-1/2	8	ATDR8	25	ATDR25
1-1/4	ATDR1-1/4	2-1/2	ATDR2-1/2	5	ATDR5	9	ATDR9	30	ATDR30
1-4/10	ATDR1-4/10	2-8/10	ATDR2-8/10	5-6/10	ATDR5-6/10	10	ATDR10		

Dimensions

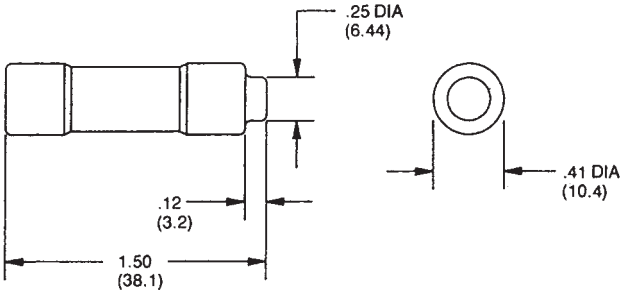

Small Motor Fuse Protection, 600 Volts AC or Less

MOTOR FULL LOAD AMPERES	ATDR RATING*	
	MINIMUM DUTY	NORMAL DUTY
.71 - .89	1-1/4	1-6/10
.90 - 1.19	1-6/10	2
1.20 - 1.34	2	2-1/2
1.35 - 1.79	2-1/2	3
1.80 - 2.25	3	4
2.26 - 2.69	4	5
2.70 - 2.90	4	6
2.91 - 3.20	5	6
3.21 - 3.75	5	7
3.76 - 4.50	6	8
4.51 - 5.34	8	10
5.35 - 5.69	10	12
5.70 - 6.70	12	12
6.71 - 7.79	12	15
7.80 - 8.88	15	17-1/2
8.89 - 11.1	17-1/2	20
11.2 - 13.3	20	25
13.4 - 15.2	25	30

* The National Electrical Code allows time-delay Class CC fuses to be sized at up to 400% (maximum) of motor FLA, if needed.

Recommended Fuse Blocks for Class CC Fuses

Number of Poles	CATALOG NUMBER			
	ULTRASAFE™ Indicating Fuse Holder	Screw Connector w/ Double Quick Connects	Pressure Plate Connector w/ Double Quick Connects	Copper Box Connector
ADDER		30310R	30320R	30350R
1	USCC1I	30311R	30321R	30351R
2	USCC2I	30312R	30322R	30352R
3	USCC3I	30313R	30323R	30353R

Gross Automation (877) 268-3700 · www.ferrazshawmutsales.com · sales@grossautomation.com

TIME DELAY/CLASS CC FUSES

A

ATDR1/4 to 30

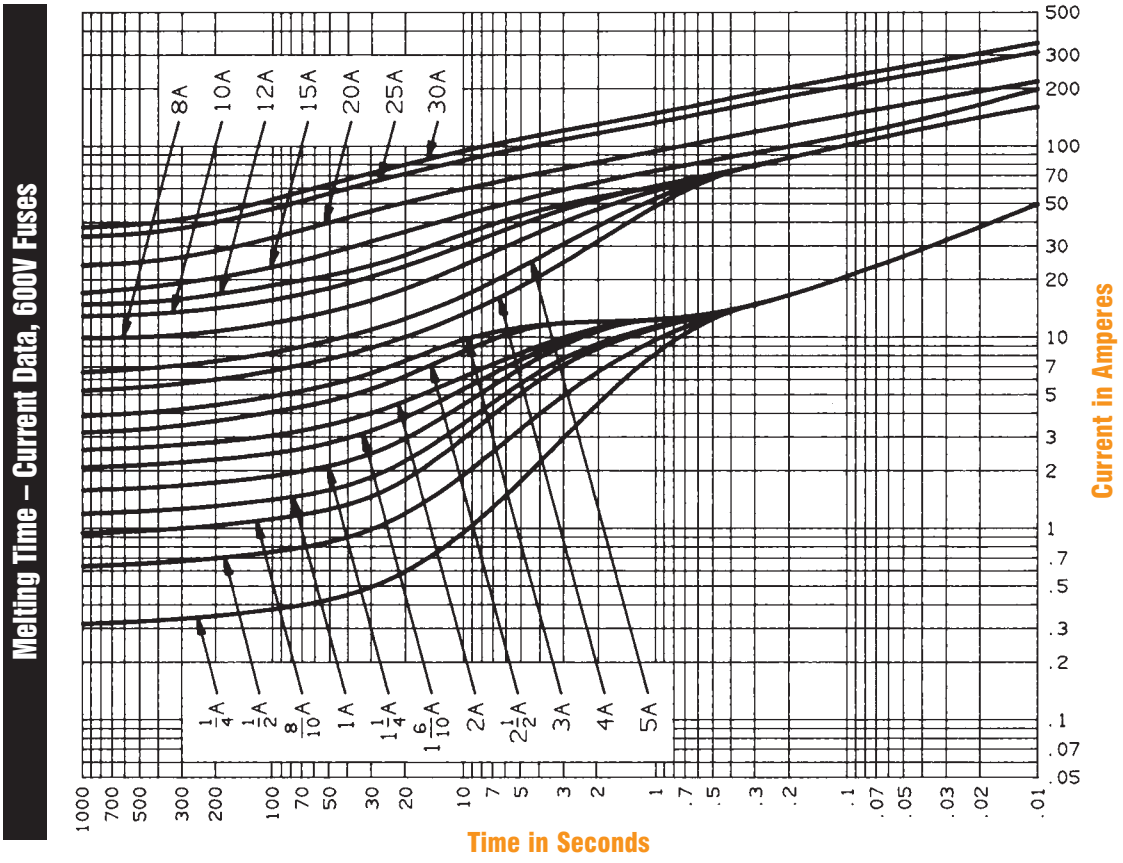

Peak Let-Thru Current Data – ATDR1/4 to 30, 600 Volts AC

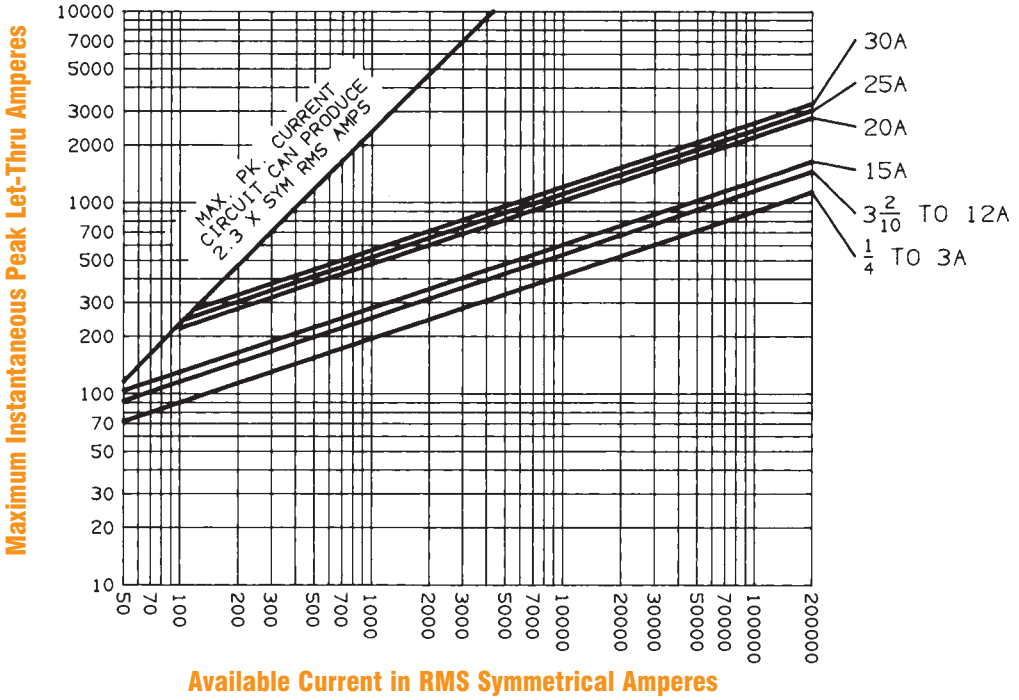

Gross Automation (877) 268-3700 · www.ferrazshawmutsales.com · sales@grossautomation.com

CS8 Industrial Control Relays

The miniature relay system with big advantages

CS8 front mount auxiliaries are positive guidance

Despite increasing complexity, control systems and installations must become increasingly compact. And the CS8 Miniature Relay System packs maximum performance into minimum space.

Small but rugged

Sprecher + Schuh has subjected this relay series to monitored endurance tests that demonstrate their ruggedness. Under normal duty, CS8 contacts have an electrical life of 700,000 operations, while the AC magnet system has a mechanical life of 15,000,000 operations.

The coil is designed for absolute undervoltage reliability. Undervoltages that do not cause the contactor to close can be withstood indefinitely without damage.

The body of the device is sturdy as well. The front housing, containing the phase partitions and screwdriver guides, is manufactured in one piece. Front and rear housing are then joint fitted together.

Superior Contact Reliability

The standard CS8 base relay and auxiliary contacts are bifurcated H-bridge design which divides each movable contact into two sections at the tip of the spanner which provides a higher degree of reliability for low signal applications. Perfect fit for PLC and other electronic circuits operate at signals as low as 15V @ 2mA.

Accessories require no additional panel space

The entire CS8 system is logically engineered. Auxiliary contact blocks are modular and snap-on without increasing the CS8's original width of 45mm. Also, due to its sideways switching movement, the basic relay has the same low profile whether an AC or DC operating magnet is used. This permits the use of enclosures with shallow mounting depths. Once the CS8 is installed,

all auxiliary contact blocks can be snapped on or removed without changing any existing wiring.

Auxiliary components provide flexibility

CS8 auxiliary components allow you to convert the basic four pole relay up to an 8 pole relay.

Effortless installation

CS8 relays are DIN-rail mountable for instant installation and modification. Fittings are also included for base mounting. All terminals are clearly marked and shipped in the open position for installation with either manual or power screwdrivers. Using self-adhesive labels, or plastic clip-on tags.

The entire line is cULus Listed and CE Certified and offers finger and back of hand protection to the strictest international standards.

POWR-SAFE "Dead Front" Holders

Littelfuse POWR-SAFE "Dead Front" holders provide optimum protection to personnel. Indicating and non-indicating versions are available in 1, 2, 3, or 4 poles for Class CC and Midget fuses.

FEATURES/BENEFITS

- Meets "Dead Front" requirements and IEC Type IP2 Protection
- Mountable on 35mm Din Rail
- Blown fuse identification (Indicating versions only)
- Easy installation and removal of fuses. No special fuse pullers or tools required.
- UL Listed for branch circuit protection (Class CC versions only)
- Compact design
- Ventilated design for cooler operation

SPECIFICATIONS

Voltage rating: 600 Volts
Ampere rating: 30 amperes
Interrupting rating: 200 kA (Class CC)
100 kA (Midget)
Terminal type: Pressure plate
Suggested Torque: 15 lb.
Wire range: #6—#14CU
Material: Thermo-Plastic
Flammability Rating: 94VO
Approvals: UL Listed
CSA Certified
IEC Type IP2 Protection
CE Certified

ORDERING INFORMATION

Indicating Part Number	Non-Indicating Part Number	Fuse Type	Number of Poles
LPSC001ID	LPSC001	Class CC	1
LPSC002ID	LPSC002	Class CC	2
LPSC003ID	LPSC003	Class CC	3
LPSC004ID	LPSC004	Class CC	4
LPSM001ID	LPSM001	Midget	1
LPSM002ID	LPSM002	Midget	2
LPSM003ID	LPSM003	Midget	3
LPSM004ID	LPSM004	Midget	4

DIMENSIONS in inches (mm in parentheses)

- **LPSM/LPSC** POWR-SAFE Holders

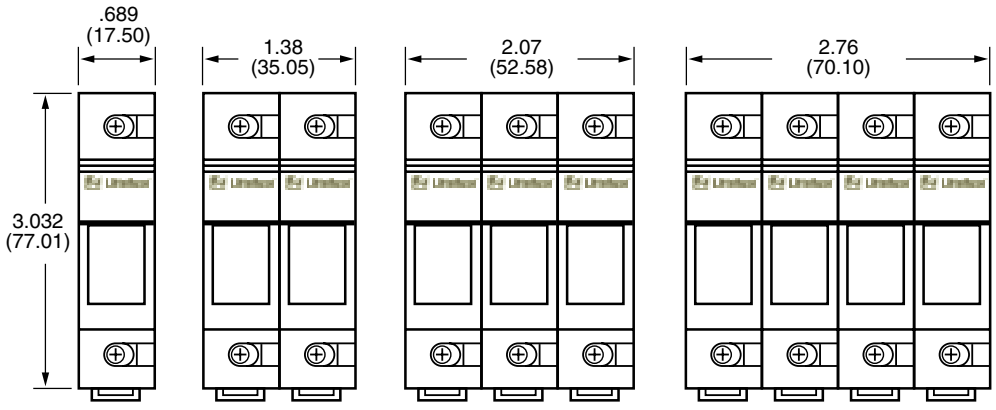

AJT

TIME DELAY/CLASS J

SMARTSPOT® WITH *MAXIMUM* CIRCUIT PROTECTION

Amp-trap 2000® SmartSpot® AJT fuses now provide a visual open fuse indicator. With advanced material technology added to the existing product line the AJT fuse provides IEC Type "2" (No Damage) protection to main, feeder, and branch circuits, for all types of loads — yet, they require only half the mounting space needed for 600VAC Class RK fuses. AJT's time delay characteristics for handling typical in-rush currents, its current limiting ability.

HIGHLIGHTS:

- Smart Spot Indicator
- Time Delay
- Highly Current Limiting
- Arc Flash Mitigating
- DC Ratings
- Optional Mechanical Indicator (70 to 600A fuses)

APPLICATIONS:

- Motor Circuits
- Mains
- Feeders
- Branch Circuits
- Lighting, Heating & General Loads
- Transformers
- Control Panels
- Circuit Breaker Back-up
- Bus Duct
- Load Centers
- Note: See Motor Fuse Applications Tables on page L9

Features/Benefits

- **Solid State SmartSpot Indicator**
- **Time delay** for motor starting and transformer inrush
- **300kA interrupting rating** - self-certified, UL witnessed tests
- **Extremely current limiting** for low peak let-thru current
- **Most current limiting UL class fuse**
- **Recommended for Arc Flash energy reduction**
- **Small footprint** requires less mounting space and allows smaller, more economical fuse blocks
- **Easy 2-to-1 selectivity** for prevention of nuisance shutdowns
- **Unique Class J dimensions** prevent replacement errors
- **High-visibility orange label** gives instant recognition
- **Metal-embossed date and catalog number** for traceability and lasting identification
- **Fiberglass body** provides dimensional stability in harsh industrial settings
- **High-grade silica filler** ensures fast arc quenching
- **Optional EI Indicator/Switch mount** for AJT70 to 600 open fuse indication

Ratings

- **AC:** 1 to 600A 600VAC, 200kA I.R. (self certified for 600VAC, 300kA I.R., UL witnessed)

  DC: 1 to 600A 500VDC, 100kA I.R.

Approvals

AJT (1-600):

- UL Listed to Standard 248-8 File E2137
- DC Listed to UL Standard 248
- CSA Certified to Standard C22.2 No. 248.8
- IEC 269-2-1

AJT (70-600) EI:

- UL Listed to File E60314
- DC Tested to UL Standard 248

Gross Automation (877) 268-3700 · www.ferrazshawmutsales.com · sales@grossautomation.com

TIME DELAY/CLASS J FUSES

Standard Fuse Ampere Ratings, Catalog Numbers

AMPERE RATING	CATALOG NUMBER	AMPERE RATING	CATALOG NUMBER	AMPERE RATING	CATALOG NUMBER	AMPERE RATING	CATALOG NUMBER
1	AJT1	4-1/2	AJT4-1/2	25	AJT25	125	AJT125
1-1/4	AJT1-1/4	5	AJT5	30	AJT30	150	AJT150
1-1/2	AJT1-1/2	5-6/10	AJT5-6/10	35	AJT35	175	AJT175
1-6/10	AJT1-6/10	6	AJT6	40	AJT40	200	AJT200
1-8/10	AJT1-8/10	6-1/4	AJT6-1/4	45	AJT45	225	AJT225
2	AJT2	7	AJT7	50	AJT50	250	AJT250
2-1/4	AJT2-1/4	8	AJT8	60	AJT60	300	AJT300
2-1/2	AJT2-1/2	9	AJT9	70	AJT70	350	AJT350
2-8/10	AJT2-8/10	10	AJT10	80	AJT80	400	AJT400
3	AJT3	12	AJT12	90	AJT90	450	AJT450
3-2/10	AJT3-2/10	15	AJT15	100	AJT100	500	AJT500
3-1/2	AJT3-1/2	17-1/2	AJT17-1/2	110	AJT110	600	AJT600
4	AJT4	20	AJT20				

Note: Indicator Not Available (1-7A)

Recommended Fuse Blocks With Box Connectors for Amp-trap® Class J Fuses

Fuse Ampere Rating	Catalog Number 600V OR LESS	
	1 Pole	3 pole
0-30	US3J1I	US3J3I
31-60	US6J1I	US6J3I
61-100	61036J	61038J
101-200	62001J	62003J
201-400	64031J	64033J
401-600	6631J	6633J

A variety of pole configurations and termination provisions is available.

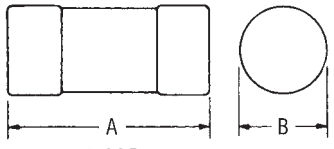

1-60A

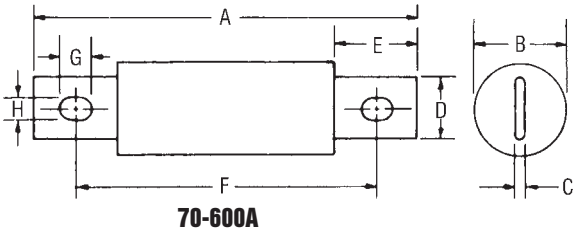

70-600A

Dimensions

AMPERE RATING	A		B		C		D		E		F		G		H	
	In.	mm	In.	mm	In.	mm	In.	mm	In.	mm	In.	mm	In.	mm	In.	mm
1-30	2-1/4	57	13/16	21	-	-	-	-	-	-	-	-	-	-	-	-
31-60	2-3/8	60	1-1/16	27	-	-	-	-	-	-	-	-	-	-	-	-
61-100	4-5/8	117	1-1/16	27	1/8	3.2	3/4	19	1	25	3-5/8	92	3/8	10	9/32	7
101-200	5-3/4	146	1-5/8	41	3/16	4.8	1-1/8	29	1-3/8	35	4-3/8	111	3/8	10	9/32	7
201-400	7-1/8	181	2-1/8	54	1/4	6.3	1-5/8	41	1-7/8	48	5-1/4	133	17/32	14	13/32	10
401-600	8	203	2-1/2	64	3/8	9.5	2	51	2-1/8	54	6	152	11/16	18	17/32	13

Optional Indicator/Microswitch Mount (EI) dimensions:

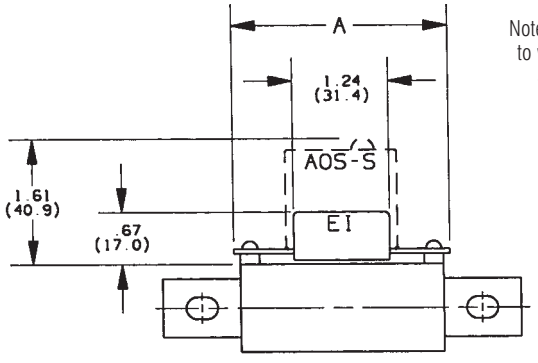

Note: Fuses with the EI option are designed to work with the AOS-S or AOS-Q add-on Switch, which is ordered separately. See page J7 for details.

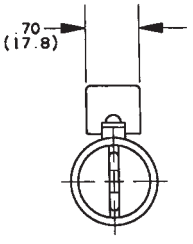

CATALOG NUMBER	A
AJT(70-100)-EI	2.80 (71.0)
AJT(110-200)-EI	3.22 (81.8)
AJT(225-400)-EI	3.24 (82.2)
AJT(450-600)-EI	3.61 (91.8)

TIME DELAY/CLASS J FUSES

Melting Time – Current Data, 600V Fuses – AJT1 to 600

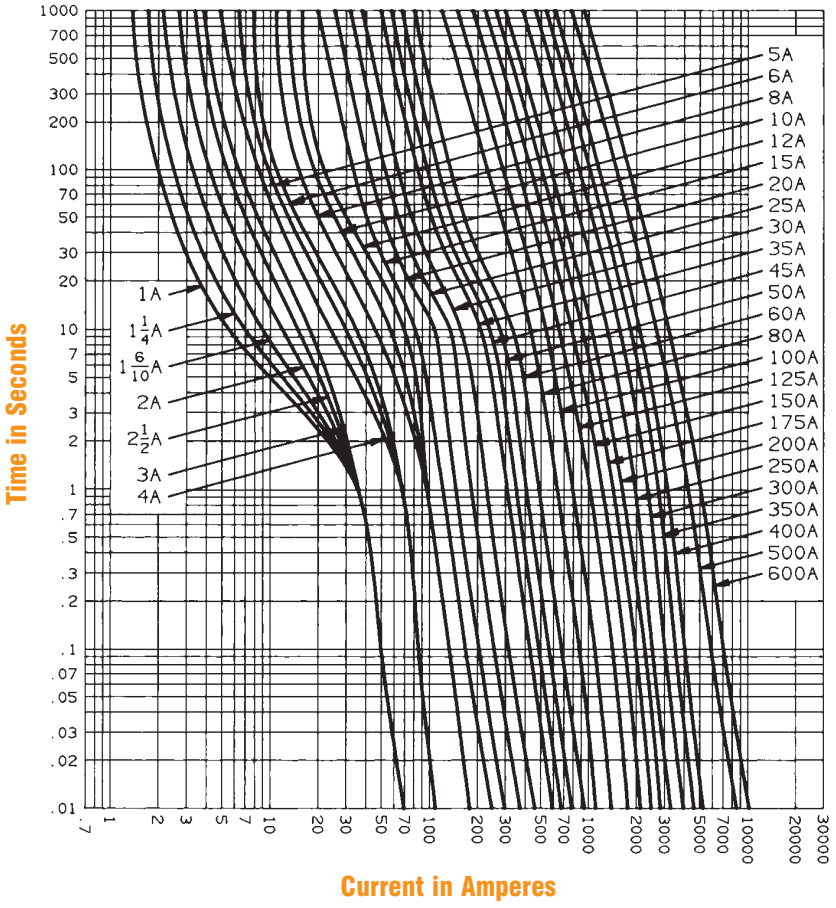

Peak Let-Thru Current Data – AJT30 to 600, 600 Volts AC

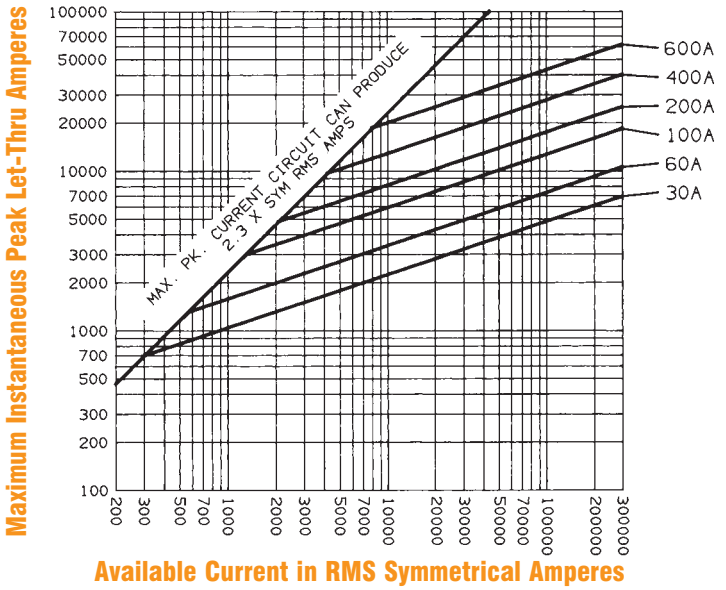

Note: See Motor Fuse Application Tables on page L9.

Fuse Blocks, Holders and Accessories

Class J POWR-SAFE Holders

Littelfuse POWR-SAFE "Dead Front" fuseholders provide optimum protection to personnel. An integral DIN-Rail adapter system allows fuse holders to be mounted on 35mm DIN-Rail without the use of tools or special parts. Indicating and non-indicating versions are available in 1, 2, or 3 poles for Class J fuses.

Features/benefits

- Meets "Dead Front" requirements and IEC Type IP20 protection.
- Mountable on 35mm DIN-Rail.
- Blown fuse identification (Indicating versions only).
- Easy installation and removal of fuses. No special fuse pullers or tools required.
- UL listed for branch circuit protection.
- Ventilated design for cooler operation.

Ordering Information

Littelfuse Catalog No.	Littelfuse System No.	No. of Poles	Pack Qty.	Voltage Rating	Ampere Rating	Options
LPSJ30-1	LPSJ301.Z	1	6	600V	30A	–
LPSJ30-2	LPSJ302.Z	2	3	600V	30A	–
LPSJ30-3	LPSJ303.Z	3	2	600V	30A	–
LPSJ30-1ID	LPSJ301.ZXID	1	6	600V	30A	Indicating
LPSJ30-2ID	LPSJ302.ZXID	2	3	600V	30A	Indicating
LPSJ30-3ID	LPSJ303.ZXID	3	2	600V	30A	Indicating
LPSJ60-1	LPSJ601.Z	1	6	600V	60A	–
LPSJ60-2	LPSJ602.Z	2	3	600V	60A	–
LPSJ60-3	LPSJ603.Z	3	2	600V	60A	–
LPSJ60-1ID	LPSJ601.ZXID	1	6	600V	60A	Indicating
LPSJ60-2ID	LPSJ602.ZXID	2	3	600V	60A	Indicating
LPSJ60-3ID	LPSJ603.ZXID	3	2	600V	60A	Indicating

Multi-Pole Assembly Kit: Order No: US3J2PAK to assemble two LPSJ30-1
US3J3PAK to assemble three LPSJ30-1
US6J2PAK to assemble two LPSJ60-1
US6J3PAK to assemble three LPSJ60-1

Dimensions in inches (mm in parentheses)

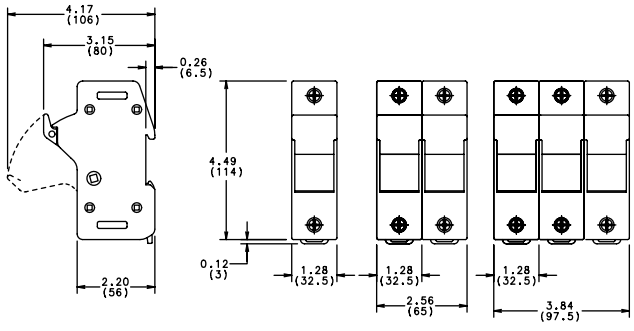

30 Amp

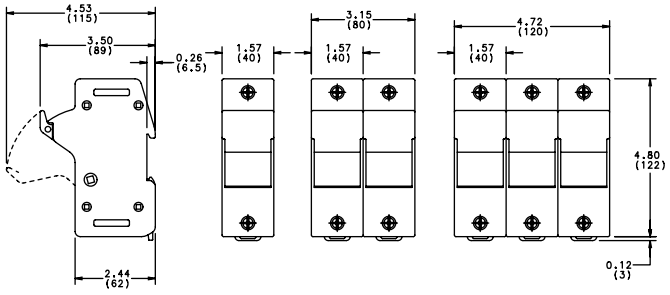

60 Amp

Specifications

Voltage Rating: 600 VAC
Interrupting Rating: 200 kA
Ampere Rating: 30 and 60 amperes
Terminal Type: Pressure plate
Suggested Torque: 30A – 35 inch-pounds
60A – 45 inch-pounds
Wire Range: #2 – #14CU

Material: Thermo-plastic
Flammability Rating: 94V0
Approvals: UL Listed
CSA Certified
IEC Type IP20 Protection
CE

Part Numbers

Part Numbers: RH Series with Options

Termination	Contact Configuration	Basic Part No.	Indicator Light	Check Button	Indicator Light and Check Button	Top Bracket
B (blade)	SPDT	RH1B-U	RH1B-L*	—	—	RH1B-UT
	DPDT	RH2B-U	RH2B-UL	RH2B-UC	RH2B-ULC	RH2B-UT
	3PDT	RH3B-U	RH3B-UL	RH3B-UC	RH3B-ULC	RH3B-UT
	4PDT	RH4B-U	RH4B-UL	RH4B-UC	RH4B-ULC	RH4B-UT
V2 (PCB 0.078" [2mm] wide)	SPDT	RH1V2-U	RH1V2-L*	—	—	—
	DPDT	RH2V2-U	RH2V2-UL	RH2V2-UC	RH2V2-ULC	—
	3PDT	RH3V2-U	RH3V2-UL	RH3V2-UC	RH3V2-ULC	—
	4PDT	RH4V2-U	RH4V2-UL	RH4V2-UC	RH4V2-ULC	—

*1. * RH1B(V2)-L is* **not** *UL recognized.*
2. For Coil and Contact Ratings, see the next page.

D

Part Numbers: Sockets

Relay	Standard DIN Rail Mount	Finger-Safe DIN Rail Mount	Surface Mount	Panel Mount	PCB Mount	Spring (optional)
RH1B	SH1B-05	SH1B-05C	—	SH1B-51	SH1B-62	SY2S-02F1 SFA-101 SFA-202 SY4S-51F1 SFA-301 SFA-302
RH2B	SH2B-05	SH2B-05C	SH2B-02	SH2B-51	SH2B-62	SY4S-02F1 SFA-101 SFA-202 SY4S-51F1
RH3B	SH3B-05	SH3B-05C	—	SH3B-51	SH3B-62	SH3B-05F1 SFA-101, -202 SY4S-51F1
RH4B	SH4B-05	SH4B-05C		SH4B-51	SH4B-62	SH4B-02F1 SFA-101, -202 SY4S-51F1

3. See Section F for details on sockets. All DIN rail mount sockets shown above can be mounted using DIN rail BNDN1000.

Internal Circuit

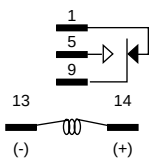

RH1

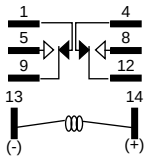

RH2

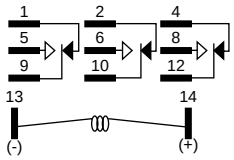

RH3

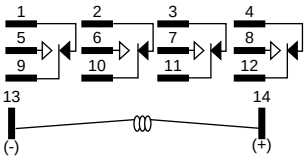

RH4

1595-W

1595-2SWTWCC4

1595-NTLWCC4

1595-TRWCC4

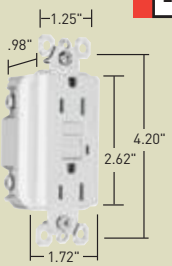

Catalog Number	Rating A.	Rating VAC	Colors	Description	NEMA	3rd Party Compliance: UL943/C22.2 No. 144	3rd Party Compliance: UL498/C22.2 No. 42	3rd Party Compliance: FSUL/ WC596	3rd Party Compliance: UL20/C22.2 No. 111
GFCI Receptacles									
1595-*	15	125	Brown, I, LA, W, BK, GRY, RED	Spec Grade 15 Amp Duplex	5-15R	•	•	•	
2095-*	20	125	Brown, I, LA, W, BK, GRY, RED	Spec Grade 20 Amp Duplex	5-20R	•	•	•	
2085-*	20	125	I, LA, W, BK	Spec Grade 20 Amp Dead Front		•	(UL508/C22.2 No. 14)		
1595-HG*	15	125	Brown, I, LA, W, GRY, RED	Hospital Grade 15 Amp Duplex	5-15R	•	•	•	
2095-HG*	20	125	Brown, I, LA, W, GRY, RED	Hospital Grade 20 Amp Duplex	5-20R	•	•	•	
Auto-Ground GFCI Receptacles									
1595-S*	15	125	I, LA, W	Spec Grade 15 Amp Duplex	5-15R	•	•	•	
2095-S*	20	125	I, LA, W	Spec Grade 20 Amp Duplex	5-20R	•	•	•	
Decorator Switch/GFCI Combination Receptacles									
1595-SWT*CC4									
Switch:	15	120	I, LA, W, BK	Spec Grade 15 Amp	5-15R	•	•		•
GFCI:	15	125		Single-Pole Switch					
1595-2SWT*CC4									
2 Switches:	15	120	I, LA, W, BK	Spec Grade 15 Amp	5-15R	•	•		•
GFCI:	15	125		Two Single-Pole Switches					
Decorator LED Nightlight/GFCI Combination Receptacles									
1595-NTL*CC4	15	125	I, LA, W, BK	Spec Grade 15 Amp	5-15R	•	•	•	
2095-NTL*	20	125	I, LA, W, GRY, RED	Spec Grade 20 Amp	5-20R	•	•	•	
1595-HGNTL*	15	125	Brown, I, LA, W, GRY, RED	Hospital Grade 15 Amp	5-15R	•	•	•	
2095-HGNTL*	20	125	Brown, I, LA, W, GRY, RED	Hospital Grade 20 Amp	5-20R	•	•	•	
Tamper-Resistant GFCI Receptacles									
1595-TR*CC4	15	125	I, LA, W, BK	Spec Grade 15 Amp Duplex	5-15R	•	•	•	
1595-HGTR*	15	125	Brown, I, LA, W, GRY, RED	Hospital Grade 15 Amp Duplex	5-15R	•	•	•	
2095-TR*	20	125	Brown, I, LA, W, BK, GRY, RED	Spec Grade 20 Amp Duplex	5-20R	•	•	•	
2095-HGTR*	20	125	Brown, I, LA, W, GRY, RED	Hospital Grade 20 Amp Duplex	5-20R	•	•	•	
Illuminated GFCI Receptacles Light is on when power is available									
1595-*L	15	125	Brown, I, LA, W	Spec Grade 15 Amp Duplex	5-15R	•	•	•	
2095-*L	20	125	Brown, I, LA, W, GRY	Spec Grade 20 Amp Duplex	5-20R	•	•	•	
1595-HG*L	15	125	Brown, I, LA, W, GRY, RED	Hospital Grade 15 Amp Duplex	5-15R	•	•	•	
2095-HG*L	20	125	Brown, I, LA, W, GRY, RED	Hospital Grade 20 Amp Duplex	5-20R	•	•	•	

*** Color Designation**

—	Brown	BK	Black
I	Ivory	GRY	Gray
LA	Light Almond	RED	Red
W	White		

For additional technical or application-specific information, call 800-223-4185 or visit our website at www.passandseymour.com. We're eager to put our expertise to work for you.

Distributed by:

USA
P.O. Box 4822
Syracuse, NY 13221-4822
800-611-7277

Canada
570 Applewood Crescent
Vaughan, ON, L4K 4B4
905-738-9195

Pass & Seymour

legrand®

www.passandseymour.com/gfci

BR1241 2/06

©2006, Pass & Seymour/Legrand EMA/DG

FREE SHIPPING* + FREE IN STORE PICK UP + FREE RETURNS**

More saving. More doing.

Share Email Print

Carlon 1-Gang 19 cu. in. Type FSE FS Box

Model # E980DFN-CTN **Store SKU # 202665**

Write The First Review

View Local Store Pricing
Available for In-Store Pick Up

Product Description | Specifications | Customer Reviews | More Info | Shipping Options

PRODUCT DESCRIPTION

The Carlon 1-Gang 19 cu. in. Type FSE FS Box is designed for dead-end terminations. The box is crafted with non-corrosive PVC for durability and features integral mounting feet for easier installation. It is CSA- and UL listed for safety.

- For dead-end terminations
- Non-corrosive PVC construction
- Takes standard covers and accessories
- Also takes standard devices
- CSA- and UL listed to help ensure safety
- Integral mounting feet allow for easier installation
- Note: Product may vary by store.
- MFG Brand Name : Carlon
- MFG Model # : E980DFN-CTN
- MFG Part # : E980DFN-CTN

Return To Top

SPECIFICATIONS

Assembled Depth (in.)	3.87 in	Assembled Height (in.)	2.3 in
Assembled Width (in.)	4.97 in	Bracket type	N/A
CSA Listed	Yes	Color	Grey
Color Family	Grey	Cover Material	PVC
ETL Listed	No	Electrical Product Type	Box
Indoor/Outdoor	Outdoor	Item Package Type	Cardboard Container
Manufacturer Warranty	No	Material	PVC
Number of Gangs	1.0	Package Quantity	1

Paintable/Stainable	No	Product Depth (in.)	3.87
Product Height (in.)	2.3	Product Weight (lb.)	0.37
Product Width (in.)	4.97	Trade Size (in.)	Other
UL Listed	1-UL Listed		

Return To Top

CUSTOMER REVIEWS

Do you own this product? Be the first to rate it. Your feedback will help users like you to make informed decisions and will help us to improve our product offerings!

WRITE A REVIEW

If you have questions or comments regarding the customer service you received, please contact us.

Return To Top

MORE INFO

Warranty

For warranty information on this product, please call our Internet Customer Service Center at 1-800-435-4654.

Return To Top

SHIPPING OPTIONS

Store Exclusive. This item is available for purchase in select stores only.

Return To Top

† Local store prices may vary from those displayed. Products shown as available are normally stocked but inventory levels cannot be guaranteed.

© 2000-2011 Homer TLC, Inc. All Rights Reserved. Use of this site is subject to certain Terms of Use which constitute a legal agreement between you and The Home Depot U.S.A. Inc.

OMRON

Switch Mode Power Supply
S8VK-G (15/30/60/120/240/480-W Models)

Reliable and Easy Operation-Worldwide Power Supply
Resistant in tough environments
Easy and fast installation
The most compact class on the market

- Universal input for worldwide applications:
  100 to 240 VAC (85 to 264 VAC)
- DC input can be available: 90 to 350 VDC
- Possible for 2 phases input usage.
- Wide operation temperature range: –40 to 70 °C
- Power Boost function at 120%
- Safety standards:
  UL508/60950-1, CSA C22.2 No. 107.1/60950-1
  EN50178, EN60950-1.
  Lloyd's standards, EN60204-1 PELV
  Safety of Power Transformers: EN61558-2-16
- ANSI/ISA 12.12.01 (excluding 480-W models)
- CSA C22.2 No.213 (excluding 480-W models)
- 15-W,30-W, and 60-W models conform to
  UL Class 2 output Standards
- EMS: EN 61204-3
  EMI: EN61204-3 Class B
- Five years Warranty

⚠ Refer to *Safety Precautions for All Power Supplies* and *Safety Precautions* on page 17.

Model Number Structure

Model Number Legend

Note: Not all combinations are possible. Refer to *List of Models* in *Ordering Information*, below.

S8VK- □□□□□□
1 2 3

1. Input voltage types
G: Single phase

2. Power Ratings
015: 15 W
030: 30 W
060: 60 W
120: 120 W
240: 240 W
480: 480 W

3. Output voltage
05: 5 V
12: 12 V
24: 24 V
48: 48 V

Ordering Information

Note: For details on normal stock models, contact your nearest OMRON representative.

Power ratings	Input voltage	Output Voltage	Output current	Boost Current	Model number
15 W	Single phase 100 to 240 VAC 90 to 350 VDC	5 V	3 A	3.6 A	**S8VK-G01505**
		12 V	1.2 A	1.44 A	**S8VK-G01512**
		24 V	0.65 A	0.78 A	**S8VK-G01524**
30 W		5 V	5 A	6 A	**S8VK-G03005**
		12 V	2.5 A	3 A	**S8VK-G03012**
		24 V	1.3 A	1.56 A	**S8VK-G03024**
60 W		12 V	4.5 A	5.4 A	**S8VK-G06012**
		24 V	2.5 A	3 A	**S8VK-G06024**
120 W		24 V	5 A	6 A	**S8VK-G12024**
240 W		24 V	10 A	12 A	**S8VK-G24024**
		48 V	5 A	6 A	**S8VK-G24048**
480 W		24 V	20 A	24 A	**S8VK-G48024**
		48 V	10 A	12 A	**S8VK-G48048**

IES-150B

Industrial 5-port mini type unmanaged Ethernet switch with 5x10/100Base-T(X)

Features

- Supports 5 ports 10/100 Base-T(X)
- Supports auto-negotiation and auto-MDI/MDI-X
- Supports store-and-forward transmission
- Supports flow control
- Compact size for easily installation
- Rigid IP-30 housing design
- DIN-Rail and wall mounting enabled

Introduction

IES-150B is an unmanaged Ethernet switch with 5x10/100Base-T(X) ports. With very mini size of housing, you can install IES-150B easily. In addition, IES-150B is with rigid IP-30 housing design and can operate under harsh environment. The extended operating temperature range from -40 to 70°C is ready and can satisfy most requirement of operation.

Practical Operation

IES-150B can be used in connecting several Ethernet devices like Ethernet I/O, IP-Camera or other Ethernet switches. In addition, its mini size enables easily installation and minimize space requirement.

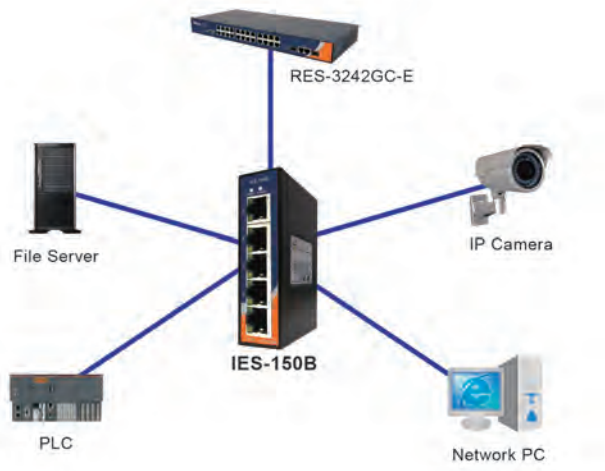

Connections of Ethernet devices

Dimensions

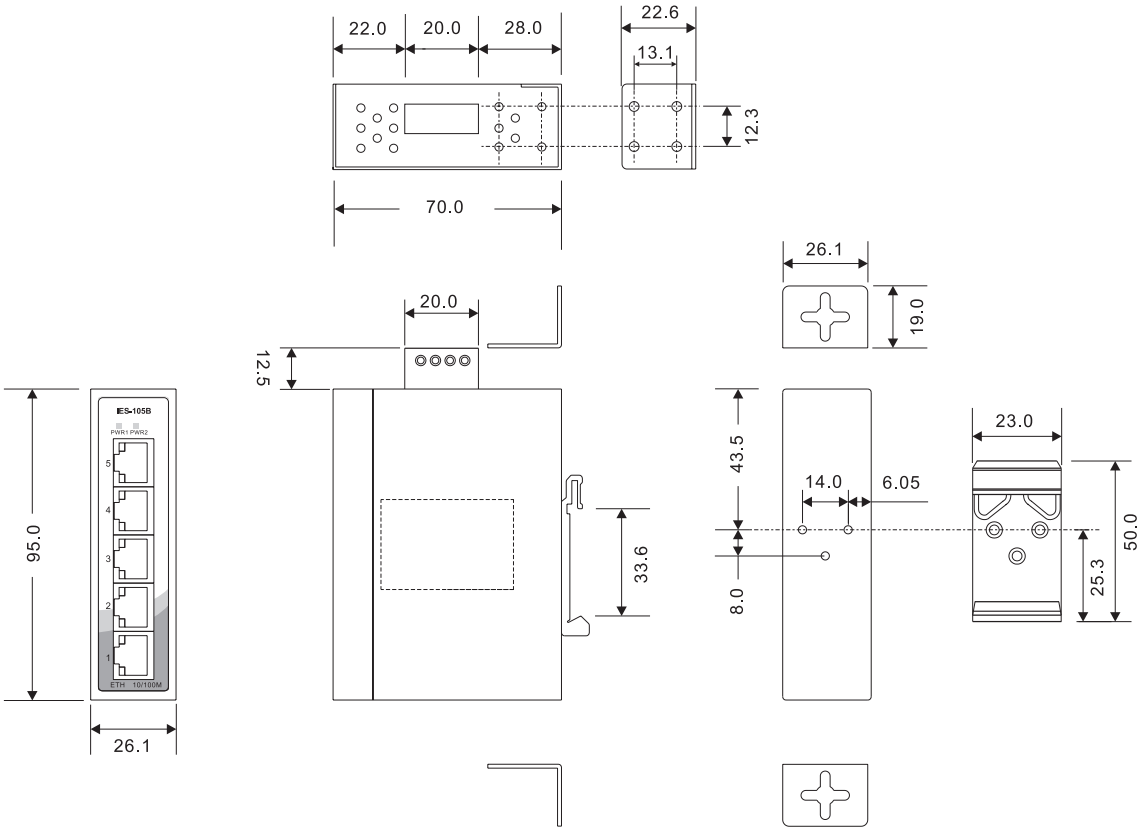

(Unit=mm)

Specifications

ORing Switch Model	IES-150B
Physical Ports	
10/100Base-T(X) Ports in RJ45 Auto MDI/MDIX	5
Technology	
Ethernet Standards	IEEE 802.3 for 10Base-T IEEE 802.3u for 100Base-TX IEEE 802.3x for Flow control
MAC Table	2048 MAC addresses
Processing	Store-and-Forward
LED Indicators	
Power indicator	Green : Power LED x 2
10/100Base-T(X) RJ45 port Indicator	Green for port Link/Act. Amber for Duplex/Collision
Power	
Input Power	Dual 12~48 VDC power input on 4-pin terminal block
Power Consumption (Typ.)	3 Watts
Overload Current Protection	Present

Reverse Polarity Protection	Present
Physical Characteristics	
Enclosure	IP-30
Dimensions (W x D x H)	26.1 (W) x 70 (D) x 95 (H)mm (1.03 x 2.76 x 3.74 inch)
Weight (g)	205 g
Environmental	
Storage Temperature	-40 to 85°C (-40 to 185°F)
Operating Temperature	-40 to 70°C (-40 to 158°F)
Operating Humidity	5% to 95% Non-condensing
Regulatory Approvals	
EMI	FCC Part 15, CISPR (EN55022) class A
EMS	EN61000-4-2 (ESD), EN61000-4-3 (RS), EN61000-4-4 (EFT), EN61000-4-5 (Surge), EN61000-4-6 (CS), EN61000-4-8, EN61000-4-11
Shock	IEC60068-2-27
Free Fall	IEC60068-2-32
Vibration	IEC60068-2-6
Safety	EN60950-1
Warranty	5 years

Ordering Information

IES-1 A B B

Code efinition	10/100Base-T(X) Port Number	Additional Port Number
Option	**- 5:** 5 ports	**- 0:** 0 port

Available Model	Model Name	Descripn
	IES-150B	Industrial 5-port mini type unmanaged Ethernet switch with 5x10/100Base-T(X)

Packing List

- IES-150B
- DIN-Rail Kit
- Wall-mount Kit
- Quick Installation Guide

Optional Accessories (Can be purchased separately)

- DR-45 series, 45W DIN-Rail power supply
- DR-75 series, 75W DIN-Rail power supply
- DR-120 series, 120W DIN-Rail power supply
- PAA-121000, 12VDC/1000mA 12W Power Adapter with universal 100 to 240VAC input, US plug
- PAE-121000, 12VDC/1000mA 12W Power Adapter with universal 100 to 240VAC input, EU plug
- SDR-240-48, 240W DIN-Rail power supply
- SDR-480-48, 480W DIN-Rail power supply

PANDUCT® Type E — Slotted Wall Wiring Duct

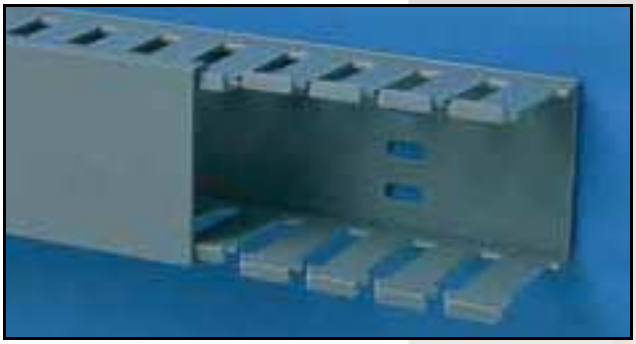

Type E Slotted Wall Wiring Duct

- Made of rigid PVC (See *pg. 34* for material specifications)
- Rated for continuous use temperatures up to 50°C (122°F)
- Available in a variety of colors as a standard part (See *page 36* for details)
- Provided with standard mounting holes (dimensions *page 31*)
- Available without mounting holes (See ordering information below)
- Available with adhesive backing* (See *page 22* for details)

Type E— Wiring Duct Standard Colors†:

LG	DG	WH
Light Gray	Dark Gray	White

BL	IB
Black	Intrinsic Blue

Colors shown are approximate.

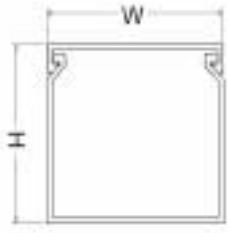

Duct Part Number	Duct External Dimensions		Cover Part Number	Duct Std. Ctn. Qty.	Cover Std. Ctn. Qty.	Std. Lgth
	WxH IN.	WxH (mm)				
E.5X.5LG6	0.63 x 0.56	(16.0) x (14.2)	C.5LG6	120 ft.	120 ft.	6 ft.
E.5X.62LG6	0.63 x 0.68	(16.0) x (17.3)		120 ft.	120 ft.	
E.5X1LG6	0.63 x 1.06	(16.0) x (26.9)		120 ft.	120 ft.	
E.5X1.25LG6	0.63 x 1.31	(16.0) x (33.3)		120 ft.	120 ft.	
E.5X1.75LG6	0.63 x 1.81	(16.0) x (46.0)		120 ft.	120 ft.	
E.5X2LG6	0.63 x 2.06	(16.0) x (52.3)		120 ft.	120 ft.	
E.75X.75LG6	0.88 x 0.81	(22.4) x (20.6)	C.75LG6	120 ft.	120 ft.	6 ft.
E.75X1LG6	0.88 x 1.06	(22.4) x (26.9)		120 ft.	120 ft.	
E.75X1.5LG6	0.88 x 1.56	(22.4) x (39.6)		120 ft.	120 ft.	
E.75X2LG6	0.88 x 2.12	(22.4) x (53.8)		120 ft.	120 ft.	
E1X1LG6	1.14 x 1.12	(29.0) x (28.4)	C1LG6	120 ft.	120 ft.	6 ft.
E1X1.25LG6	1.14 x 1.37	(29.0) x (34.8)		120 ft.	120 ft.	
E1X1.5LG6	1.14 x 1.62	(29.0) x (41.1)		120 ft.	120 ft.	
E1X2LG6	1.14 x 2.12	(29.0) x (53.8)		120 ft.	120 ft.	
E1X2.5LG6	1.14 x 2.62	(29.0) x (66.5)		120 ft.	120 ft.	
E1X3LG6	1.14 x 3.12	(29.0) x (79.2)		120 ft.	120 ft.	
E1X4LG6	1.14 x 4.12	(29.0) x (104.6)		120 ft.	120 ft.	
E1.5X1 LG6	1.64 x 1.12	(41.7) x (28.4)	C1.5LG6	120 ft.	120 ft.	6 ft.
E1.5X1.5LG6	1.64 x 1.62	(41.7) x (41.1)		120 ft.	120 ft.	
E1.5X2LG6	1.64 x 2.12	(41.7) x (53.8)		120 ft.	120 ft.	
E1.5X3LG6	1.64 x 3.12	(41.7) x (79.2)		120 ft.	120 ft.	
E1.5X4LG6	1.64 x 4.12	(41.7) x (104.6)		60 ft.	120 ft.	
E2X1LG6	2.14 x 1.12	(54.4) x (28.4)	C2LG6	120 ft.	120 ft.	6 ft.
E2X1.5LG6	2.14 x 1.62	(54.4) x (41.1)		120 ft.	120 ft.	
E2X2LG6	2.14 x 2.12	(54.4) x (53.8)		120 ft.	120 ft.	
E2X2.5LG6	2.14 x 2.62	(54.4) x (66.5)		60 ft.	120 ft.	
E2X3LG6	2.14 x 3.12	(54.4) x (79.2)		60 ft.	120 ft.	
E2X4LG6	2.14 x 4.12	(54.4) x (104.6)		60 ft.	120 ft.	
E2X5LG6	2.14 x 5.12	(54.4) x (130.0)		60 ft.	120 ft.	
E2.5X3LG6	2.64 x 3.12	(67.1) x (79.2)	C2.5LG6	60 ft.	120 ft.	6 ft.
E3X1LG6	3.14 x 1.12	(79.8) x (28.4)	C3LG6	120 ft.	120 ft.	6 ft.
E3X1.25LG6	3.14 x 1.37	(79.8) x (34.8)		120 ft.	120 ft.	
E3X2LG6	3.14 x 2.12	(79.8) x (53.8)		60 ft.	120 ft.	
E3X3LG6	3.14 x 3.12	(79.8) x (79.2)		60 ft.	120 ft.	
E3X4LG6	3.14 x 4.12	(79.8) x (104.6)		60 ft.	120 ft.	
E3X5LG6	3.14 x 5.12	(79.8) x (130.0)		60 ft.	120 ft.	
E4X1.5LG6	4.14 x 1.62	(105.2) x (41.1)	C4LG6	120 ft.	120 ft.	6 ft.
E4X2LG6	4.14 x 2.12	(105.2) x (53.8)		60 ft.	120 ft.	
E4X3LG6	4.14 x 3.12	(105.2) x (79.2)		60 ft.	120 ft.	
E4X4LG6	4.14 x 4.12	(105.2) x (104.6)		60 ft.	120 ft.	
E4X5LG6	4.14 x 5.12	(105.2) x (130.0)		60 ft.	120 ft.	

See *page 31* for complete listing of dimensions. *Adhesive tape is not CSA Certified.

Ordering Information:

- Order number of feet required in multiples of 6 ft or Std. Carton quantities.
- To order duct without mounting holes, add NM to Part Number.
- To order with pressure-sensitive adhesive mounting tape applied, add -A to Part Number.
- Part Number shown for Light Gray LG. To order other colors, substitute WH White, DG Dark Gray, BL Black, and IB Intrinsic Blue

†See *page 36* to determine which sizes are available in each color

Part Number Nomenclature —

E	.5	X	.5	LG	6
type/style	nominal width (in)		nominal height (in)	color	length (ft)

ADAPTAHORN VIBRATING HORNS

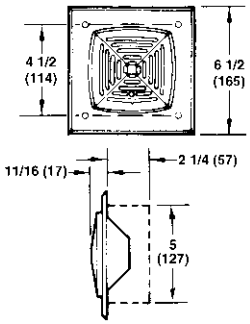

Flush Type

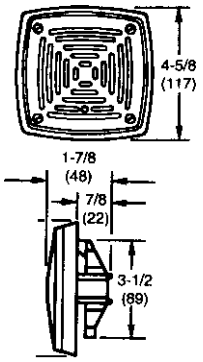

Semi Flush/Panel Mount Type

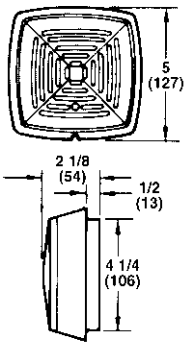

Grille Type

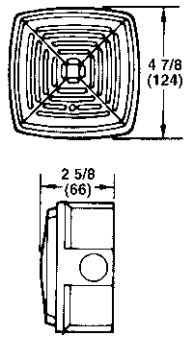

Weatherproof Type

Features

- COMPLETELY ASSEMBLED
- AC OR DC TYPES
- CSA CERTIFIED
- ADJUSTABLE VOLUME 78-103dB
- NEMA 4X MODELS AVAILABLE

Description

Modern contour styling complements new concepts in building design and decor. Low-current, high decibel vibrating horns for heavy-duty use. Available in flush, grille, projector and weatherproof models. Shipped completely preassembled to speed installation, simplify inventory and reduce loss.

Low current drain for long line runs. An adjustment screw on the front of the horn provides sound output adjustment over a 25 dB range from 78 to 103. Long life - (rated 200 hours DC, 400 hours AC - at 50% duty cycle). Wide operating range (-20% to +15% of nominal voltage). Convenient Adaptaplate mounting. Durable bonderized sage grey finish. Heavy-duty die-cast housing. Modern, low-silhouette styling.

Applications

Wherever a distinctive, urgent signal is required for timing, scheduling, paging general alarm and warning applications. Grille or flush models for use in panel boards, machinery, scoreboards, etc. Weatherproof models for exterior installations.

Flush Type

For neat, flush wall or panel installation. Projects less than 1" from mounting surface. Attractive trim plate conceals wall irregularities. Trim plate supplied with each unit. Horn mounts in a Cat. Nº 870B wallbox. Order wallbox separately.

Semi Flush/Panel Mount Type

Designed for semi-flush panel mounting, also suitable for installation on 4" square box. Supplied with trim gasket. Volume adjustable screw is conveniently located on front of horn. Installation template included. NEMA 4X rating.

Grille Type

Designed to channel the sound in a particular direction without decibel loss. Convenient, simple Adaptaplate mounting on any single gang box or 3-1/4", 3-1/2", or 4" octagon box or 4" square box.

Weatherproof Type

For outdoor applications. Die-cast weatherproof box with bonderized sage grey finish. Mounts on conduit or any flat surface using 3" (76.2) diameter bolt circle. Drilled and tapped 3/4", 14 NPT on top, bottom and rear. Two plugs supplied. NEMA 4X rating.

See next page for Ordering Information

ADAPTAHORN VIBRATING HORNS

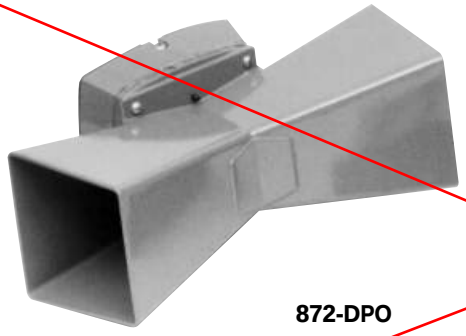

872-DPO

Description

This Adaptahorn is designed for multiple bi-directional signaling over a wide area without decibel loss. Convenient and simple Adaptaplate mounting on any single gang box or 3-1/4", 3-1/2" or 4" octagon box or 4" square box.

Indoor applications include: Industrial, commercial, institutional locations for timing, warning, paging and alarm signaling.

Installation and Mounting

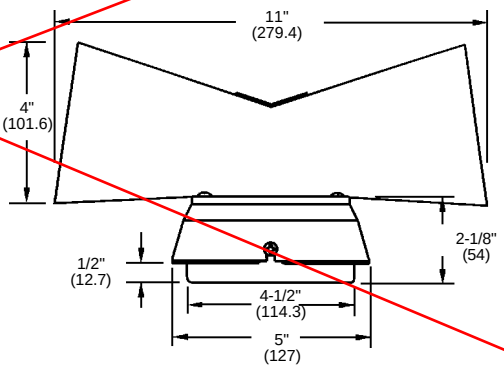

Ordering Information

DC Series

Cat. No.	Type	Volts DC	Amps	VA	DC Coil Res.(Ohms)	dB at 10'(3M)
871-G1	Flush**	24	.16	3.5	24	101
871-P1		125	.025	3.5	600	
871P-G1	Panel	24	.16	3.5	24	101
875-E1	Grille	12	.27	3.5	6	101
875-G1		24	.16	3.5	24	
875-P1		125	.025	3.5	600	
875-S1		250	.014	3.5	2400	
877-E1	Weatherproof	12	.29	3.5	6	
877-G1		24	.16	3.5	24	
877-P1		125	.025	3.5	600	
877-S1		250	.014	3.5	2400	

**Requires 870B wallbox. Order separately.

AC Series

Cat. No.	Type	Volts AC*	Amps	VA	DC Coil Res.(Ohms)	dB at 10'(3M)
870-E5	Flush	12	1.25	15	1.3	103
870-G5		24	.63	15	5.2	
870-N5		120	.13	15	150	
870-R5		240	.06	15	580	
870P-N5	Panel	120	.13	15	150	103
874-E5	Grille	12	1.25	15	1.3	103
874-G5		24	.63	15	5.2	
874-N5		120	.13	15	150	
874-R5		240	.06	15	580	
876-E5	Weatherproof	12	1.25	15	1.3	103
876-G5		24	.63	15	5.2	
876-N5		120	.13	15	150	
876-R5		240	.06	15	580	
872DPO-N5	Double Projector	120	.13	15	150	101

* 50/60Hz

ADAPTAHORN ACCESSORIES

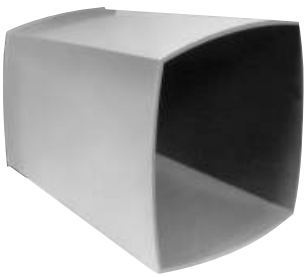

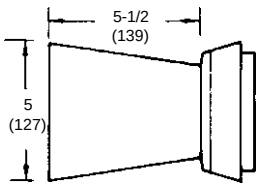

Cat. No.	Description
872-PO	Plastic Projector for 870, 871, 871P, 874, 875, 876, 877. **Available only as separate item**

Non-Illuminated Pushbuttons (Assembled) con't

A

Part Numbers: Non-Illuminated Pushbuttons

Style	Contacts	Part Number	
		Momentary	Maintained
Flush *	1NO 1NC 1NO-1NC 2NO 2NC	ABD110N-B,G,R* ABD101N-B,G,R* ABD111N-B,G,R* ABD120N-B,G,R* ABD102N-B,G,R*	AOD110N-B,G,R* AOD101N-B,G,R* AOD111N-B,G,R* AOD120N-B,G,R* AOD102N-B,G,R*
Extended	1NO 1NC 1NO-1NC 2NO 2NC	ABD210N-① ABD201N-① ABD211N-① ABD220N-① ABD202N-①	AOD210N-① AOD201N-① AOD211N-① AOD220N-① AOD202N-①
Extended with Neoprene Boot	1NO 1NC 1NO-1NC 2NO 2NC	ABPD210N-①† ABPD201N-①† ABPD211N-①† ABPD220N-①† ABPD202N-①†	AOPD210N-① AOPD201N-① AOPD211N-① AOPD220N-① AOPD202N-①
Recessed	1NO 1NC 1NO-1NC 2NO 2NC	ABFD110N-① ABFD101N-① ABFD111N-① ABFD120N-① ABFD102N-①	AOFD110N-① AOFD101N-① AOFD111N-① AOFD120N-① AOFD102N-①
Extended with Full Shroud	1NO 1NC 1NO-1NC 2NO 2NC	ABFD210N-① ABFD201N-① ABFD211N-① ABFD220N-① ABFD202N-①	AOFD210N-① AOFD201N-① AOFD211N-① AOFD220N-① AOFD202N-①
Ø 1-37/64" (40mm) Mushroom	1NO 1NC 1NO-1NC 2NO 2NC	ABD310N-① ABD301N-① ABD311N-① ABD320N-① ABD302N-①	AOD310N-① AOD301N-① AOD311N-① AOD320N-① AOD302N-①
Ø 1-37/64" (40mm) Mushroom with Full Shroud	1NO 1NC 1NO-1NC 2NO 2NC	ABGD310N-① ABGD301N-① ABGD311N-① ABGD320N-① ABGD302N-①	AOGD310N-① AOGD301N-① AOGD311N-① AOGD320N-① AOGD302N-①
Ø 2-9/16" (65mm) Jumbo Mushroom	1NO 1NC 1NO-1NC 2NO 2NC	ABD410N-① ABD401N-① ABD411N-① ABD420N-① ABD402N-①	AOD410N-① AOD401N-① AOD411N-① AOD420N-① AOD402N-①
Ø 2-9/16" (65mm) Jumbo Mushroom with Shallow Shroud	1NO 1NC 1NO-1NC 2NO 2NC	ABGD410N-① ABGD401N-① ABGD411N-① ABGD420N-① ABGD402N-①	AOGD410N-① AOGD401N-① AOGD411N-① AOGD420N-① AOGD402N-①
Ø 2-9/16" (65mm) Jumbo Mushroom With Deep Shroud	1NO 1NC 1NO-1NC 2NO 2NC	ABFD410N-① ABFD401N-① ABFD411N-① ABFD420N-① ABFD402N-①	A0FD410N-① A0FD401N-① A0FD411N-① A0FD420N-① A0FD402N-①

1. In place of ①, specify the button color code.
*2. * One each with assembled units: Black (B), Green (G), Red (R). Buttons in other colors must be ordered separately.*
3. For sub-assembly part numbers, see next page.
4. For accessories, see page A-184.
5. † Neoprene boot available only in Black (B), Green (G), Red (R) and Yellow (Y).

① Button Color Code

Color	Code
Black	B
Green	G
Red	R
Blue	S
White	W
Yellow	Y

1. 65mm Jumbo mushroom not available in white.
2. Neoprene boot is not available in blue or white.

Part Numbers: Emergency Stop Switches

Style	Contacts	Part Number
Ø 1-37/64"(40mm) Pushlock Turn Reset	1NO 1NC 1NO-1NC 2NO 2NC	AVD310N-R* AVD301N-R* AVD311N-R* AVD320N-R* AVD302N-R*
Ø 1-37/64"(40mm) Push-Pull	1NO 1NC 1NO-1NC 2NO 2NC	AYD310N-① AYD301N-① AYD311N-① AYD320N-① AYD302N-①

1. In place of ①, specify the button color code.
*2. * available in red only.*
3. For accessories, see page A-184.
4. For dimensions, see page A-188.

Pilot Lights (Assembled)

A

Assembled Pilot Lights

A P D 1 126 D N - R - ( )

Degree of Protection
A: IP65

Function
P: Pilot Light

Series Type
D: TWTD Ø 1-13/64" (Ø 30mm)

Lens Shape
1: Dome

Rated Operational Voltage (Primary)

Transformer	Full Voltage Type
126:120V AC	99:Full Voltage
246:240V AC	
486:480V AC	

Lamp Voltage (Full Voltage Only)

Incandescent	LED
6: 6V AC/DC	6: 6V AC/DC
12: 12V AC/DC	12: 12V AC/DC
24: 24V AC/DC	24: 24V AC/DC
120:120V AC	120:120V AC
	240: 240V AC

Lens Color Code
A: Amber
G: Green
R: Red
S: Blue
W: White
Y: Yellow (LED only)

Lamp Type
Blank: Incandescent Lamp
D: LED Lamp

Part Numbers: LED and Incandescent Pilot Lights

Style	Operating Voltage	Part Number	
		LED	Incandescent
Transfomer Dome	120V AC 240V AC 480V AC	APD1126DN-② APD1246DN-② —	APD1126N-② APD1246N-② APD1486N-②
Full Voltage Dome	—	APD199DN-②-③	APD199N-②-③

1. In place of ②, specify the Lens/LED color code.
2. In place of ③, specify the full volage (lamp voltage) code.

② Lens Color Code

Color	Code
Amber	A
Green	G
Red	R
Blue	S
White	W
Yellow	Y

③ Full Voltage Code

Voltage	Code
6V AC/DC	6
12V AC/DC	12
24V AC/DC	24
120V AC	120
240V AC	240 (LED only)

Modifications and Accessories – Cont'd

Standard Legend Plates

Gray Legend Plate
NEMA Type 4/4X

Gray Type 4/4X Marking	Catalog Number	*	Marking	Gray Type 4/4X Catalog Number	*
AUTO-OFF-HAND	800H-W154		LOWER	800H-W115	
AUTO-MAN-HAND	800H-W059		MAN-AUTO	800H-W031	
CLOSE	800H-W101		MAN-OFF-AUTO	800H-W062	
CYCLE START	800H-W006		MOTOR RUN	800H-W008	
CYCLE STOP (Red)	800H-W376		MOTOR STOP (Red)	800H-W375	
DECREASE	800H-W002		OFF	800H-W116	
DOWN	800H-W102		OFF-COOLANT-ON	800H-W052	
EMERG. STOP (Red)	800H-W372		OFF-LOC-REMOTE	800H-W061	
EMERGENCY STOP (Red)	800H-W373		OFF-MAN-AUTO	800H-W060	
FAST	800H-W104		OFF-ON	800H-W133	
FEED START	800H-W007		ON	800H-W117	
FEED STOP (Red)	800H-W377		OPEN	800H-W118	
FOR.-REV.	800H-W132		OPEN-CLOSE	800H-W134	
FOR.-OFF-REV.	800H-W152		OPEN-OFF-CLOSE	800H-W153	
FORWARD	800H-W105		OUT	800H-W119	
FOURTH SPEED	800H-W010		POWER ON	800H-W001	
FULL SPEED	800H-W106		PULL TO START	800H-W198	
HAND-AUTO	800H-W131		PUSH TO STOP (Red)	800H-W378	
HAND-OFF-AUTO	800H-W151		RAISE	800H-W120	
HIGH	800H-W107		RAISE-LOWER	800H-W034	
HIGH-LOW	800H-W030		RAISE-OFF-LOWER	800H-W156	
HIGH-LOW-OFF	800H-W058		RESET	800H-W121	
HIGH-OFF-LOW	800H-W155		REVERSE	800H-W122	
IN	800H-W108		RIGHT	800H-W005	
INCH	800H-W109		RUN	800H-W123	
INCREASE	800H-W003		RUN-INCH	800H-W037	
JOG	800H-W110		RUN-JOG	800H-W032	
JOG FOR.	800H-W111		SAFE-RUN	800H-W033	
JOG REV.	800H-W112		SECOND SPEED	800H-W124	
JOG RUN	800H-W135		SLOW	800H-W125	
JOG-SAFE-RUN	800H-W051		SLOW-FAST	800H-W136	
JOG-STOP-RUN	800H-W057		SLOW-OFF-FAST	800H-W157	
LEFT	800H-W004		SPEED	800H-W081	
LEFT-RIGHT	800H-W036		SPEED	800H-W182	
LOC-OFF-REMOTE	800H-W055		START	800H-W126	
LOW	800H-W113		START-JOG	800H-W138	
LOW-HIGH	800H-W035		START-JOG-STOP	800H-W158	
LOW-OFF-HIGH	800H-W056		START-RUN-STOP	800H-W054	
LOW SPEED	800H-W114		START-STOP	800H-W137	

PanelView Plus 7 Standard

Allen-Bradley

Graphic Terminals Designed to Improve Performance

No OIT shall be provided. See other comments.
-ZMC/SCI 20170816.

Features and Benefits

Ideal for small and mid-size applications, the PanelView Plus 7 Standard offers:

- Single controller connection
- Up to 25 displays
- Up to 200 alarm messages

Increased Scalability

- Form factor includes sizes from 4" to 10" with wide screen options to meet a variety of application needs
- Complementary to CompactLogix 5370 controllers
- Using less than 2 inch cabinet depth saves space and reduces cost

Improved Performance

- Windows CE 6.0 standard features, including email and text notification and secure FTP server
- Ethernet communications for integration from the machine to the enterprise
- PDF Viewer

Mobile Enabled

- Monitor applications from a secure remote location with VNC connectivity
- Email and texting notification capabilities included

Enhanced Development Experience

- Faceplates and Add-on Instructions can save 50%-90% of complex screen development time
- Use an SD card to copy and restore the operator interface quickly
- Increase operator productivity by creating intuitive interface with gradient shading and PNG support

The PanelView™ Plus operator interface has been providing both a hardware and software platform for factory automation for years. It has continued to be an integral part of the Integrated Architecture® system – providing operators at the machine level a view into the control system. The PanelView Plus 7 Standard was developed as a continuation of the PanelView Plus family to continue to provide years of quality operator interfaces for industry.

In combination with FactoryTalk® View Machine Edition, this release continues the unmatched integration with Logix and complete scalability. This offering helps strengthen our Integrated Architecture offering for machine builders along with the CompactLogix™ L1, L2 and L3 controllers.

The new operator terminals are ideal for applications that require monitoring, controlling and displaying information in dynamic ways, where operators must quickly understand machine status and make better decisions.

The PanelView Plus 7 terminals are available in a variety of display sizes, including widescreen, enabling you to select exactly what is required for your application.

PanelView Plus 7 Standard

ATEX Zone 2/22 and UL Class 1, Div 2 certification for use in hazardous environments

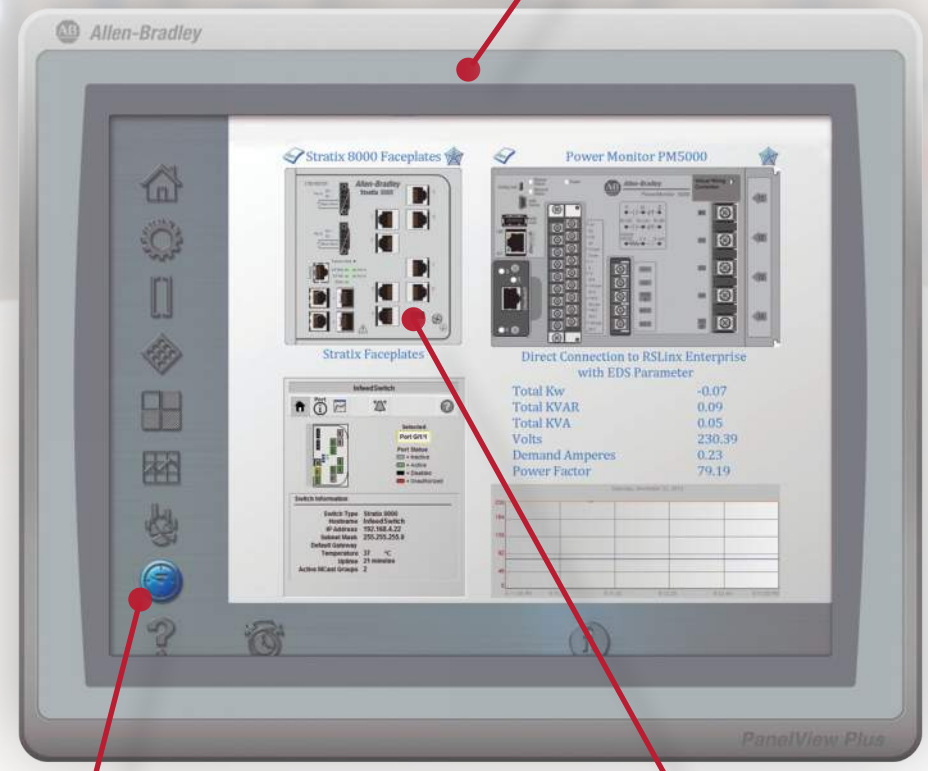

SD storage card slot for data storage, data logging, recipe management and terminal replication

USB ports for printer, RFID reader and web camera support, as well as a wide range of accessories

With the embedded PDF Viewer, show:

- *User Manuals*
- *Installation Manuals*
- *SOPs (Standard Operating Procedures)*

Faceplates and Add-on Instructions can save 50 – 90% of complex screen development time

Quick and Easy Terminal Copy and Restore

Use an SD card to quickly create copies of a terminal to reduce your time to market or restore a terminal.

- Operating system
- Network configuration and terminal settings
- FactoryTalk® View Machine Edition (ME) runtime file
- Datalogs and Recipe files

New installation clamps provide fast and simple terminal installation and removal

Embedded Ethernet port for connectivity from the machine to the enterprise

Additional screen options with widescreen 4" and 9" terminals

FactoryTalk View Machine Edition

Offers simplified project maintenance with improved handling of multiple FactoryTalk View Machine Editions applications on same terminal

- Added domain authentication options
- Manages security configuration within a running application
- Includes improved audit trail
- Provides recipe management, multi-language capabilities and intuitive animations

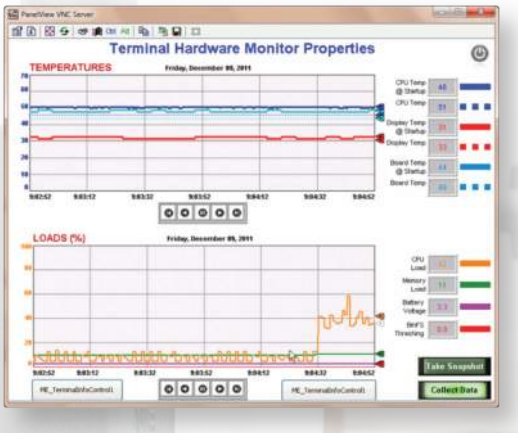

Fast Troubleshooting with Real Time Diagnostics

- Capture terminal environmental data at runtime such as temperature, load and battery voltage
- Mobile ready with VNC support and FactoryTalk Viewpoint

■ ACCESSORIES (ORDER SEPARATELY)

Item		Part number
Replacement Battery		**Y92S-36**
Wire-wrap Terminal (set of two terminals)		**Y92S-37**
Flush Mounting Adapter	26 mm × 45 mm	**Y92F-75**
	24.8 mm × 48.8 mm	**Y92F-77B**

Specifications

■ GENERAL

Item	H7ET-NV-B H7ET-NV-BH	H7ET-NFV-B	H7ET-N-B	H7ET-NV1-B H7ET-NV1-BH	H7ET-NFV1-B	H7ET-N1-B
Operating mode	UP type					
Mounting method	Flush mounting					
External connections	Screw terminals, optioinal wire-wrap terminals (See Note 3.)					
Reset	External/Manual reset					
Display	7-segment LCD with or without backlight (character height: 8.6 mm) (See Note 1.)					
Number of digits	7					
Time range	0.0h to 999999.9h or 0.0h to 3999d23.9h (switchable with switch)			0s to 999h59m59s or 0.0m to 9999h59.9m (switchable with switch)		
Count input	PNP/NPN universal DC voltage input	AC/DC multi-voltage input	No-voltage input	PNP/NPN universal DC voltage input	AC/DC multi-voltage input	No-voltage input
Case color	Black					
Attachment	Waterproof packing, flush mounting bracket, time unit labels (See Note 2.)					
Approved standard	UL508, CSA C22.2 No.14, Lloyds Conforms to EN61010-1/IEC61010-1 (pollution degree2/overvoltage category III) Conforms to VDE0106/P100					

Note: 1. Only PNP/NPN universal DC voltage input models (-H models) are available with a backlight.
2. “-hours,” “-d-h,” “-h-m,” and “-h-m-s” labels are included.
3. wire-wrap terminals (Y925-37) can be ordered separately

■ RATINGS

Item	H7ET-NV□-B, H7ET-NV□-BH	H7ET-NFV□-B	H7ET-N□-B
Supply voltage	Backlight model: 24 VDC (for backlight) No-backlight model: Not required (powered by battery)	Not required (powered by battery)	
Count input	High (logic) level: 4.5 to 30 VDC Low (logic) level: 0 to 2 VDC (Input impedance: Approx. 4.7 kΩ)	High (logic) level: 24 to 240 VAC/ VDC, 50/60 Hz Low (logic) level: 0 to 2.4 VAC/ VDC, 50/60 Hz	No voltage input Maximum short-circuit impedance: 10 kΩ max. Short-circuit residual voltage: 0.5 V max. Minimum open impedance: 750 kΩ min.
Reset input		No voltage input Maximum short-circuit impedance: 10 kΩ max. Short-circuit residual voltage: 0.5 V max. Minimum open impedance: 750 kΩ min.	
Minimum pulse width	1 s		
Reset system	External reset and manual reset: Minimum signal width of 20 ms		
Terminal screw tightening torque	0.98 N • m max.		
Ambient temperature	Operating: −10°C to 55°C (with no condensation or icing) Storage: −25°C to 65°C (with no condensation or icing)		
Ambient humidity	Operating: 25% to 85%		

Saginaw Control & Engineering
95 Midland Road
Saginaw, MI 48638
Phone: (989)799-6871
Fax: (989)799-4524
http://www.saginawcontrol.com

No Master BFP Control Panel shall be provided - only the back-panel. See other comments. -ZMC/SCI 20170816.

Part Details - SCE-60XEL3712SSLP

Part Number: SCE-60XEL3712SSLP
Description: S.S. XEL Enclosure
Height: 60.00 inches
Width: 37.38 inches
Depth: 12.00 inches
Page Number: 219
List Price: $3,024.20
Panel: SCE-60P36
Product Code: S5
Est. Shipweight: 189.00 lbs.
NEMA Rating: 12, 4, 4X

Construction -

- 0.075 In. stainless steel Type 304.
- Seams continuously welded and ground smooth.
- Flange trough collar around all sides of door opening.
- Oil-resistant Gasket.
- Collar studs provided for mounting optional panels.
- Holes provided in body for mounting disconnect operating handle and operating mechanism.
- Concealed hinge.
- Doors are interchangeable and easily removed by pulling hinge pin.
- 3-point latching mechanism.
- Latches are opened or closed with screwdriver (optional tamper-resistant inserts available).
- Mounting holes in back of enclosure.
- Mounting hardware, sealing washer and hole plug included.
- Ground studs on door and body.
- Black zinc die cast coinproof/padlocking handle.

Similar Part Numbers -

- SCE-48XEL3710SSLP
- SCE-48XEL3712SSLP
- SCE-48XEL3716SSLP
- SCE-60XEL3716SSLP

Installation Information -

- Mechanical Defeater (Variable Depth)
- Mechanical Defeater (Cable Operated)
- Cutler-Hammer Flange Mounted, Disconnects and Circuit Breakers
- Allen-Bradley Flange Mounted, Disconnects and Circuit Breakers
- Bussmann Flange Mounted, Disconnects and Circuit Breakers

CAD Package (STP, PDF, DWG)

Having trouble downloading drawings? Click Here for help.

Application -
Designed to house most standard type disconnects. See Disconnect Selection Guide to verify compatibility of specific disconnect or circuit breaker, and for wire bend space. For disconnect installation information, consult our Installation Instruction Handbook. For outdoor application a drip shield is recommended.

Finish -
#4 brushed finish on all exterior surfaces. Optional subpanels are powder coated white.

Options -
*Can be special ordered in Type 316 Stainless Steel.
*Panels can be special ordered in Stainless Steel up to 48P36 size.

Industry Standards -
NEMA Type 4, 4X, 12 & 13
UL Listed Type 4, 4X & 12
CSA Type 4, 4X & 12
IEC 60529 IP 66

Notes -
Interchangeable latches and handles found on pages 147 & 148.

Accessories -
SCE-DF60EL36LP - Panel, Dead Front (Wall Mount)

Saginaw Control & Engineering
95 Midland Road
Saginaw, MI 48638
Phone: (989)799-6871
Fax: (989)799-4524
http://www.saginawcontrol.com

Part Details - SCE-60P36

Part Number: SCE-60P36
Description: Subpanel, Bent
Height: 57.00 inches
Width: 33.00 inches
Depth: 0.88 inches
Page Number: 225
List Price: $189.89
Product Code: P3
Est. Shipweight: 58.00 lbs.
NEMA Rating: NA
Edge Flanges: Four
Configuration: C

Similar Partnumbers -

- SCE-48P24
- SCE-48P30
- SCE-48P36
- SCE-48P42
- SCE-54P42
- SCE-60BFP42
- SCE-60P24
- SCE-60P30
- SCE-60P42
- SCE-60P48
- SCE-64P25
- SCE-64P31
- SCE-64P37
- SCE-72P30
- SCE-72P36

Installation Information -

- Sub-Plate Layout & Grounding

Detailed Drawing (PDF)
Downloadable Drawing
3D STP Drawing

Having trouble downloading drawings? Click Here for help.

Finish -
Powder Coated White inside and out.

Options -
Sub-plates can be special ordered in Stainless Steel or Galvanized material. Please consult a factory representative for assistance.

Copyright © 2000 - 2008 - Saginaw Control & Engineering

Saginaw Control & Engineering
95 Midland Road
Saginaw, MI 48638
Phone: (989)799-6871
Fax: (989)799-4524
http://www.saginawcontrol.com

Part Details - SCE-FK1212SS

Part Number: SCE-FK1212SS
Description: Kit, S.S. Floor
Height: 12.00 inches
Width: 12.00 inches
Depth: 9.12 inches
Page Number: 244
List Price: $437.11
Product Code: P2
Est. Shipweight: 30.00 lbs.
NEMA Rating: NA

Similar Partnumbers -

- SCE-FK0608
- SCE-FK0610
- SCE-FK0612
- SCE-FK0618
- SCE-FK0624
- SCE-FK1208
- SCE-FK1208SS
- SCE-FK1210
- SCE-FK1210SS
- SCE-FK1212
- SCE-FK1216
- SCE-FK1216SS
- SCE-FK1218
- SCE-FK1218SS
- SCE-FK1220
- SCE-FK1224
- SCE-FK1224SS
- SCE-FK1512
- SCE-FK1512SS
- SCE-FK1516
- SCE-FK1518
- SCE-FK1518SS
- SCE-FK1524
- SCE-FK1524SS
- SCE-FK1808
- SCE-FK1810
- SCE-FK1812
- SCE-FK1816
- SCE-FK1824
- SCE-FK2410SS
- SCE-FK2412
- SCE-FK2412SS

Installation Information -

- Floor Stand Hole Layout

CAD Package (STP, PDF, DWG)

Having trouble downloading drawings? Click Here for help.

Application -
Can be installed on most wall mounted enclosures with a width of 20 inches or more. Can also be installed on SCE Free Standing enclosures. Kits include two stands. This configuration can be ordered in special sizes. Consult a factory representative for price and delivery. For specifications, consult the Installation Instruction Handbook. Made from carbon steel and finished with ANSI-61 high solids recoatable gray finish. SS parts are made from stainless steel Type 304 with #4 brushed finish.

Finish -
ANSI-61 gray powder coat

Copyright © 2000 - 2008 - Saginaw Control & Engineering

ADAPTAHORN VIBRATING HORNS

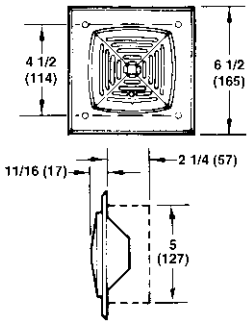

Flush Type

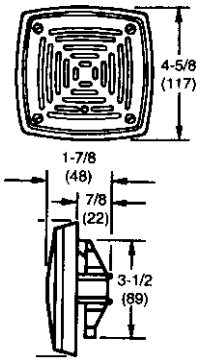

Semi Flush/Panel Mount Type

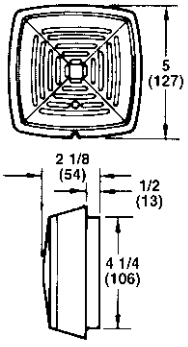

Grille Type

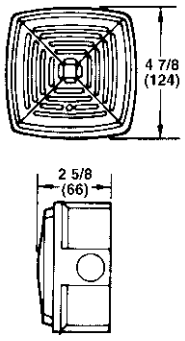

Weatherproof Type

Features

- COMPLETELY ASSEMBLED
- AC OR DC TYPES
- CSA CERTIFIED
- ADJUSTABLE VOLUME 78-103dB
- NEMA 4X MODELS AVAILABLE

Description

Modern contour styling complements new concepts in building design and decor. Low-current, high decibel vibrating horns for heavy-duty use. Available in flush, grille, projector and weatherproof models. Shipped completely preassembled to speed installation, simplify inventory and reduce loss.

Low current drain for long line runs. An adjustment screw on the front of the horn provides sound output adjustment over a 25 dB range from 78 to 103. Long life - (rated 200 hours DC, 400 hours AC - at 50% duty cycle). Wide operating range (-20% to +15% of nominal voltage). Convenient Adaptaplate mounting. Durable bonderized sage grey finish. Heavy-duty die-cast housing. Modern, low-silhouette styling.

Applications

Wherever a distinctive, urgent signal is required for timing, scheduling, paging general alarm and warning applications. Grille or flush models for use in panel boards, machinery, scoreboards, etc. Weatherproof models for exterior installations.

Flush Type

For neat, flush wall or panel installation. Projects less than 1" from mounting surface. Attractive trim plate conceals wall irregularities. Trim plate supplied with each unit. Horn mounts in a Cat. Nº 870B wallbox. Order wallbox separately.

Semi Flush/Panel Mount Type

Designed for semi-flush panel mounting, also suitable for installation on 4" square box. Supplied with trim gasket. Volume adjustable screw is conveniently located on front of horn. Installation template included. NEMA 4X rating.

Grille Type

Designed to channel the sound in a particular direction without decibel loss. Convenient, simple Adaptaplate mounting on any single gang box or 3-1/4", 3-1/2", or 4" octagon box or 4" square box.

Weatherproof Type

For outdoor applications. Die-cast weatherproof box with bonderized sage grey finish. Mounts on conduit or any flat surface using 3" (76.2) diameter bolt circle. Drilled and tapped 3/4", 14 NPT on top, bottom and rear. Two plugs supplied. NEMA 4X rating.

See next page for Ordering Information

This Page Left Blank Intentionally

460 VAC 3 PHASE 60 Hz, 1 Line Diagram

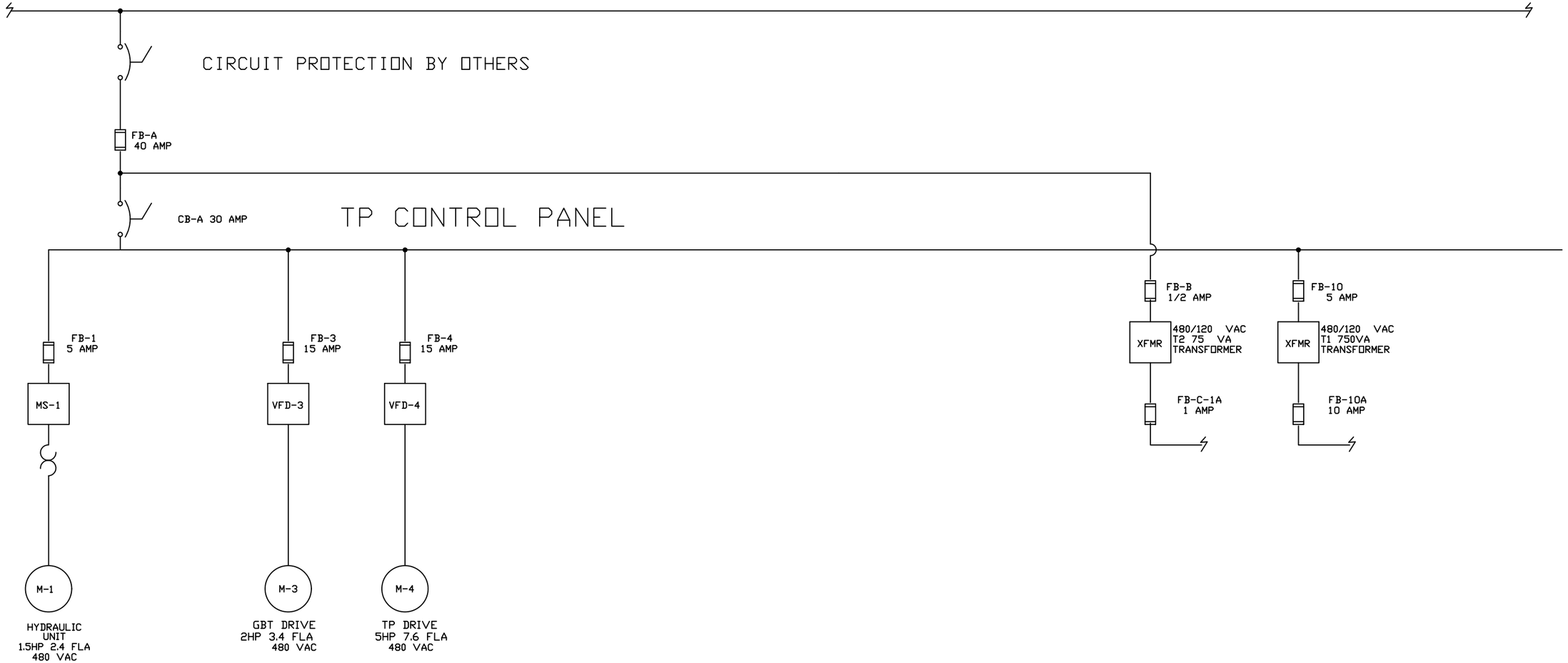

CURRENT DRAW

HYDRAULIC UNIT	2.4A
GBT DRIVE	3.4A
TP DRIVE	7.6A
CONTROL POWER	3.0A
TOTAL	16.4 AMPS

DRAWN	KT 8/7/17	CHARTER MACHINE COMPANY	
APPROVED		55 WESTER AVE METUCHEN N.J. 08840	
G.E.C. TOLERANCES UNLESS OTHERWISE SPECIFIED		TITLE: IOWA CITY, IOWA 3BTP22.93 1 LINE DIAGRAM	
FRACTIONAL DIM ±1/64		SIZE: B	DWG NO.: 770-K-1Line
DECIMAL DIM ±.005			REV: 0
ANGLE ± 1/2		SCALE: NONE	SHEET 1 OF 1
SURFACE FINISH 125			

This Page Left Blank Intentionally

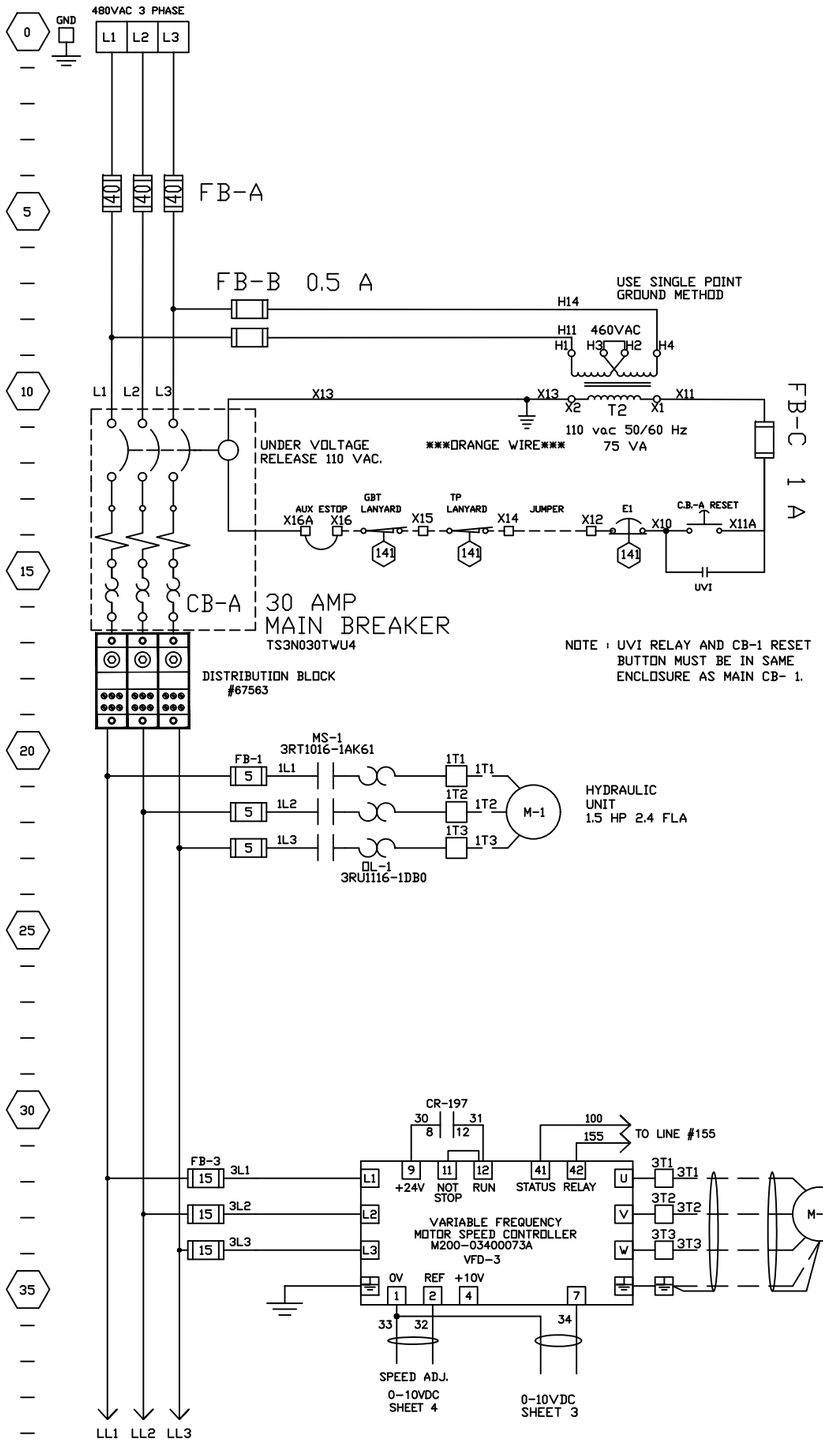

DRIVE PARAMETERS

00.001	5.0	MINIMUM SPEED
00.002	60	MAXIMUM SPEED
00.003	5.0	ACCELERATION RATE
00.004	5.0	DECELERATION RATE
00.005	AV	DRIVE CONFIGURATION
00.006	2.8	MOTOR RATED CURRENT
00.007	1730	MOTOR RATED SPEED
00.008	460	MOTOR RATED VOLTAGE
00.009	0.78	MOTOR POWER FACTOR
00.010	ALL	PARAMETER ACCESS
00.041	URI	VOLTAGE MODE SELECT
05.027	100%	ENABLE SLIP COMPENSATION
06.004	2	START/STOP LOGIC SELECT
08.028	10.002	CONFIGURATION PARAMETER

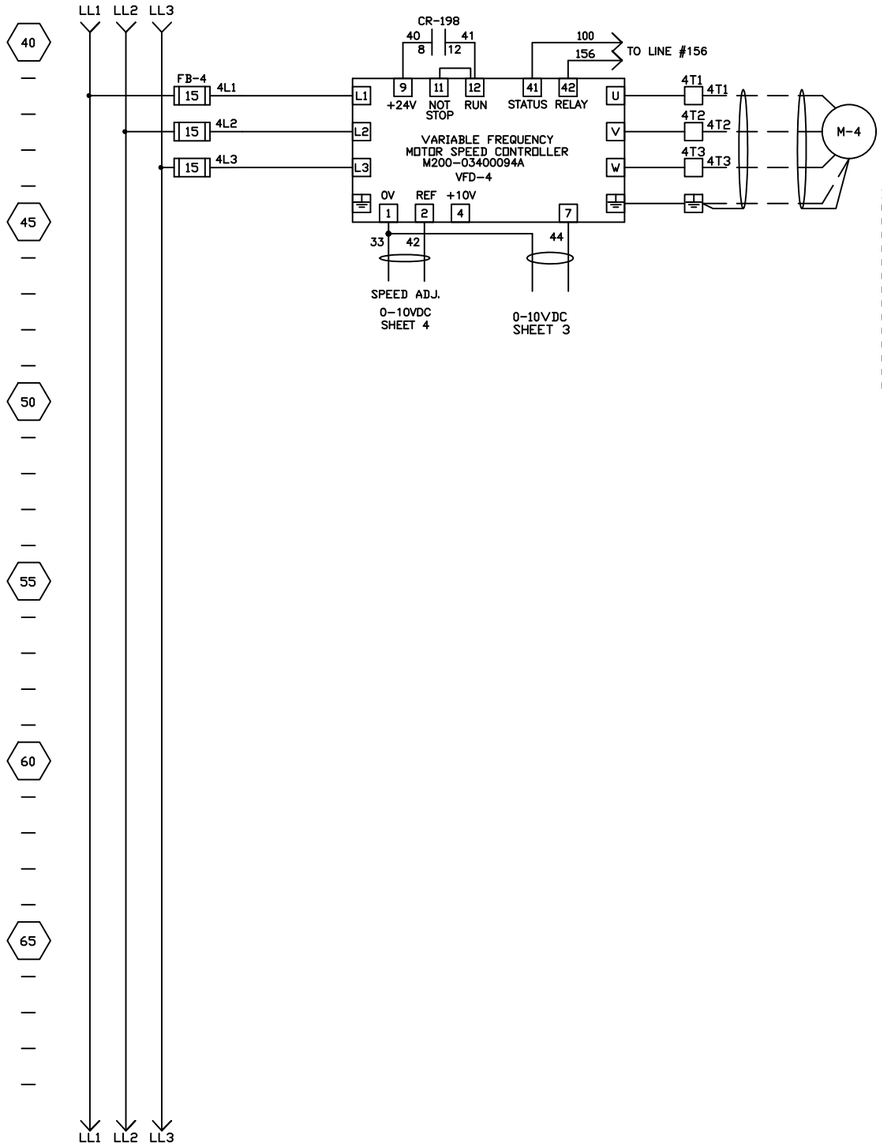

DRIVE PARAMETERS

00.001	5.0	MINIMUM SPEED
00.002	60	MAXIMUM SPEED
00.003	5.0	ACCELERATION RATE
00.004	5.0	DECELERATION RATE
00.005	AV	DRIVE CONFIGURATION
00.006	6.5	MOTOR RATED CURRENT
00.007	1755	MOTOR RATED SPEED
00.008	460	MOTOR RATED VOLTAGE
00.009	0.80	MOTOR POWER FACTOR
00.010	ALL	PARAMETER ACCESS
00.041	URI	VOLTAGE MODE SELECT
05.027	100%	ENABLE SLIP COMPENSATION
06.004	2	START/STOP LOGIC SELECT
08.028	10.002	CONFIGURATION PARAMETER

DRAWN	KT	8/7/17	CHARTER MACHINE COMPANY
APPROVED			55 WESTER AVE METUCHEN N.J. 08840
G.E.C. TOLERANCES UNLESS OTHERWISE SPECIFIED			TITLE: IOWA CITY, IOWA 3BTP22.93 3 PHASE DISTRIBUTION
FRACTIONAL DIM ±1/64			SIZE B — DWG NO. 770-K-0101 — REV 0
DECIMAL DIM ±.005			SCALE NONE — SHEET 1 OF 7
ANGLE ± 1/2			
SURFACE FINISH 125			

This Page Intentionally Left Blank

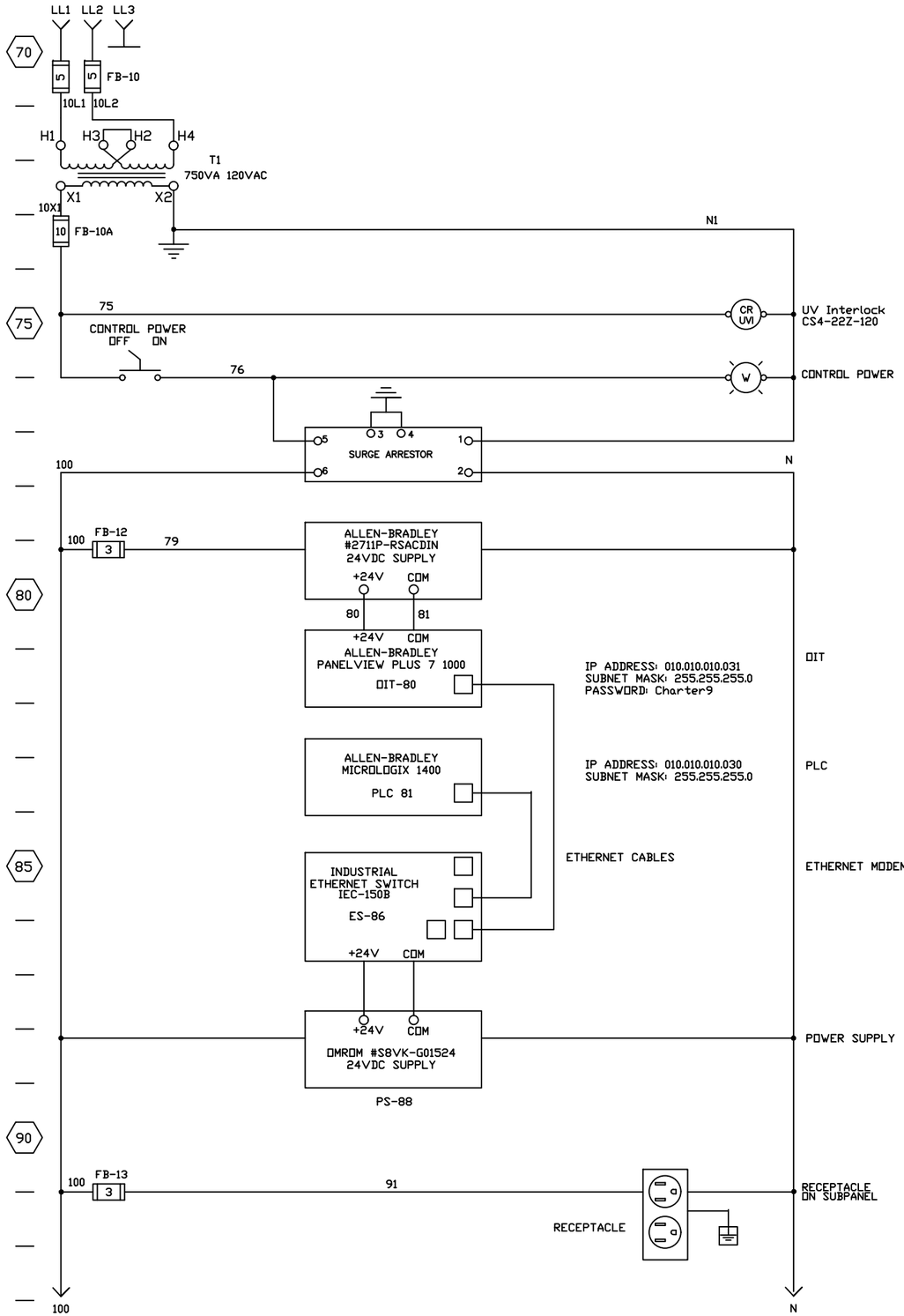

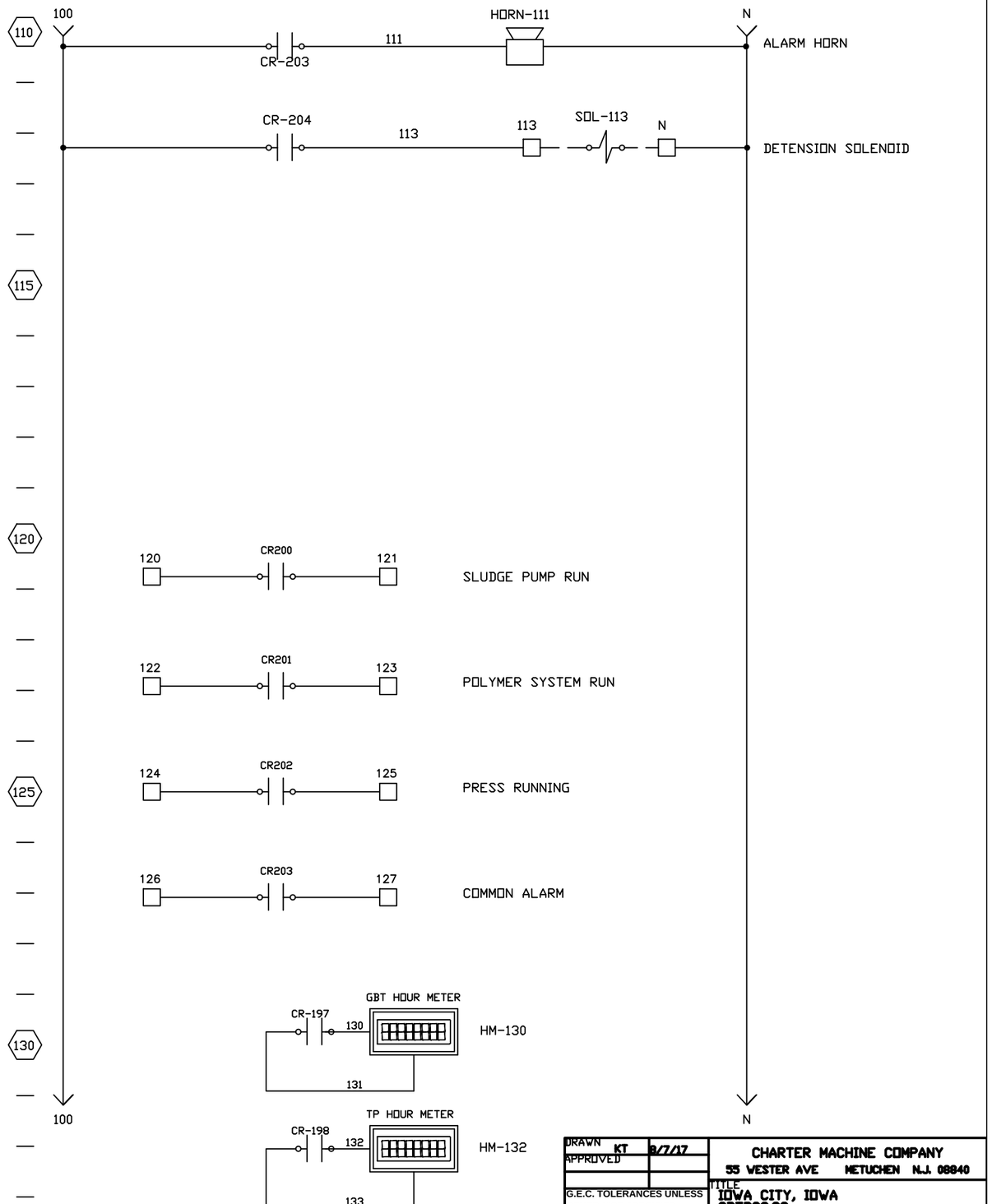

DRAWN KT	8/7/17	CHARTER MACHINE COMPANY	
APPROVED		55 WESTER AVE METUCHEN N.J. 08840	
G.E.C. TOLERANCES UNLESS OTHERWISE SPECIFIED FRACTIONAL DIM ±1/64 DECIMAL DIM ±.005 ANGLE ± 1/2 SURFACE FINISH 125		TITLE IOWA CITY, IOWA 3BTP22.93 CONTROL LOGIC	
		SIZE B	DWG NO. 770-K-0102 REV 0
		SCALE NONE	SHEET 2 OF 7

This Page Intentionally Left Blank

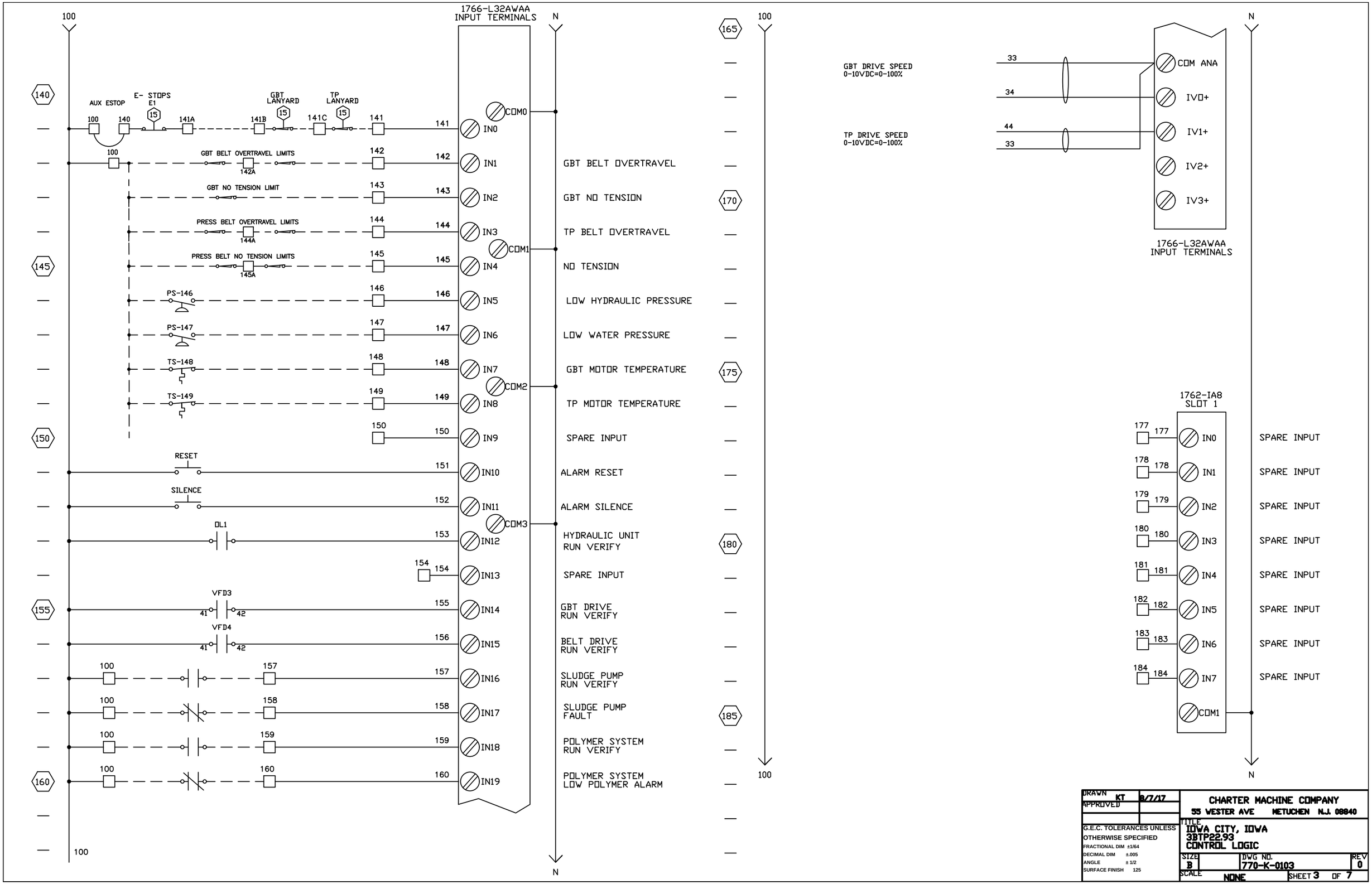

DRAWN KT	8/7/17	CHARTER MACHINE COMPANY 55 WESTER AVE METUCHEN N.J. 08840
APPROVED		TITLE IOWA CITY, IOWA 3BTP22.93 CONTROL LOGIC
G.E.C. TOLERANCES UNLESS OTHERWISE SPECIFIED FRACTIONAL DIM ±1/64 DECIMAL DIM ±.005 ANGLE ± 1/2 SURFACE FINISH 125		SIZE B · DWG NO. 770-K-0103 · REV 0 SCALE NONE · SHEET 3 OF 7

This Page Intentionally Left Blank

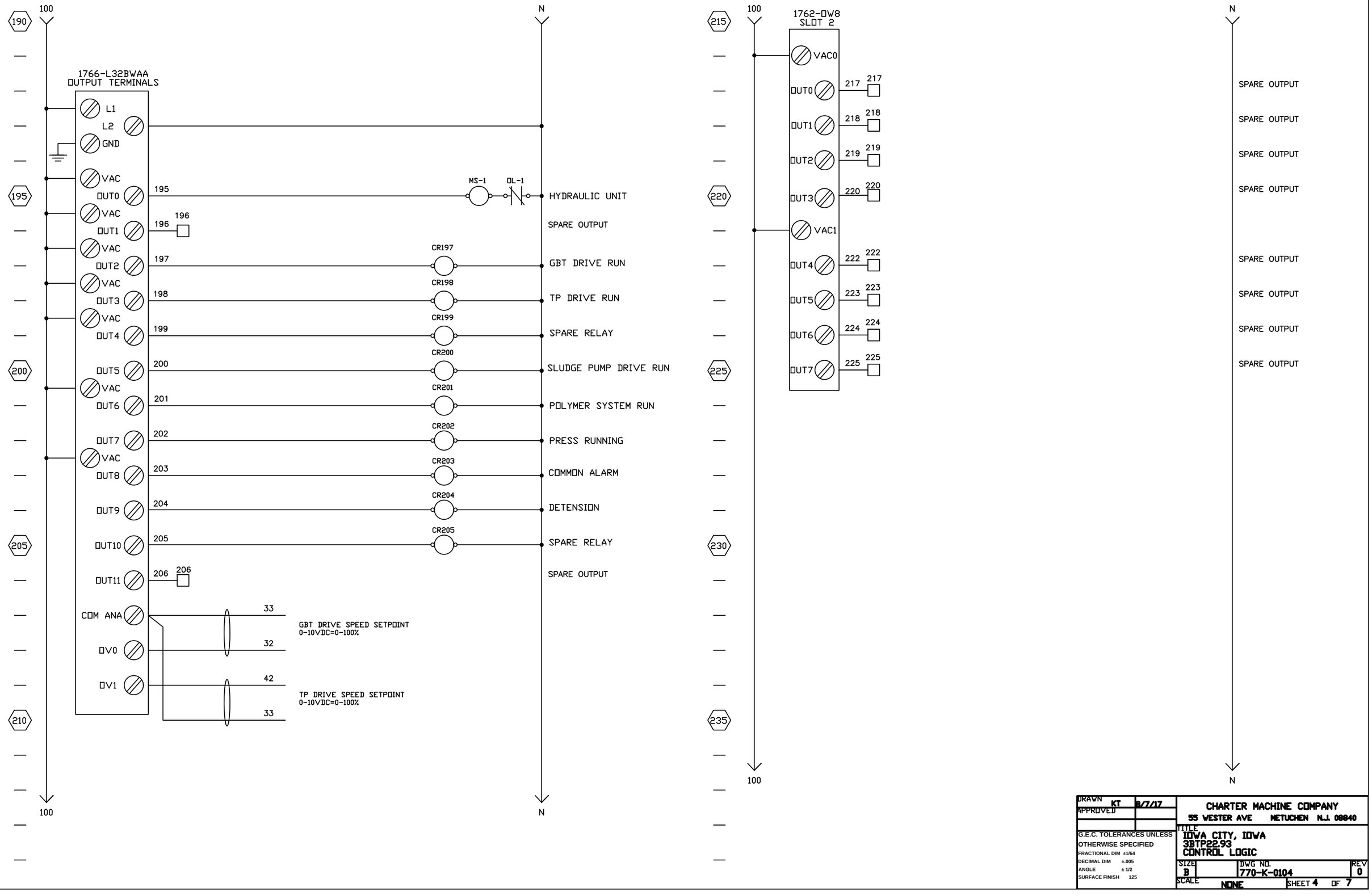

DRAWN KT	8/7/17	CHARTER MACHINE COMPANY
APPROVED		55 WESTER AVE METUCHEN N.J. 08840
G.E.C. TOLERANCES UNLESS OTHERWISE SPECIFIED FRACTIONAL DIM ±1/64 DECIMAL DIM ±.005 ANGLE ± 1/2 SURFACE FINISH 125		TITLE: IOWA CITY, IOWA 3BTP22.93 CONTROL LOGIC
SIZE B	DWG NO. 770-K-0104	REV 0
SCALE NONE	SHEET 4 OF 7	

This Page Intentionally Left Blank

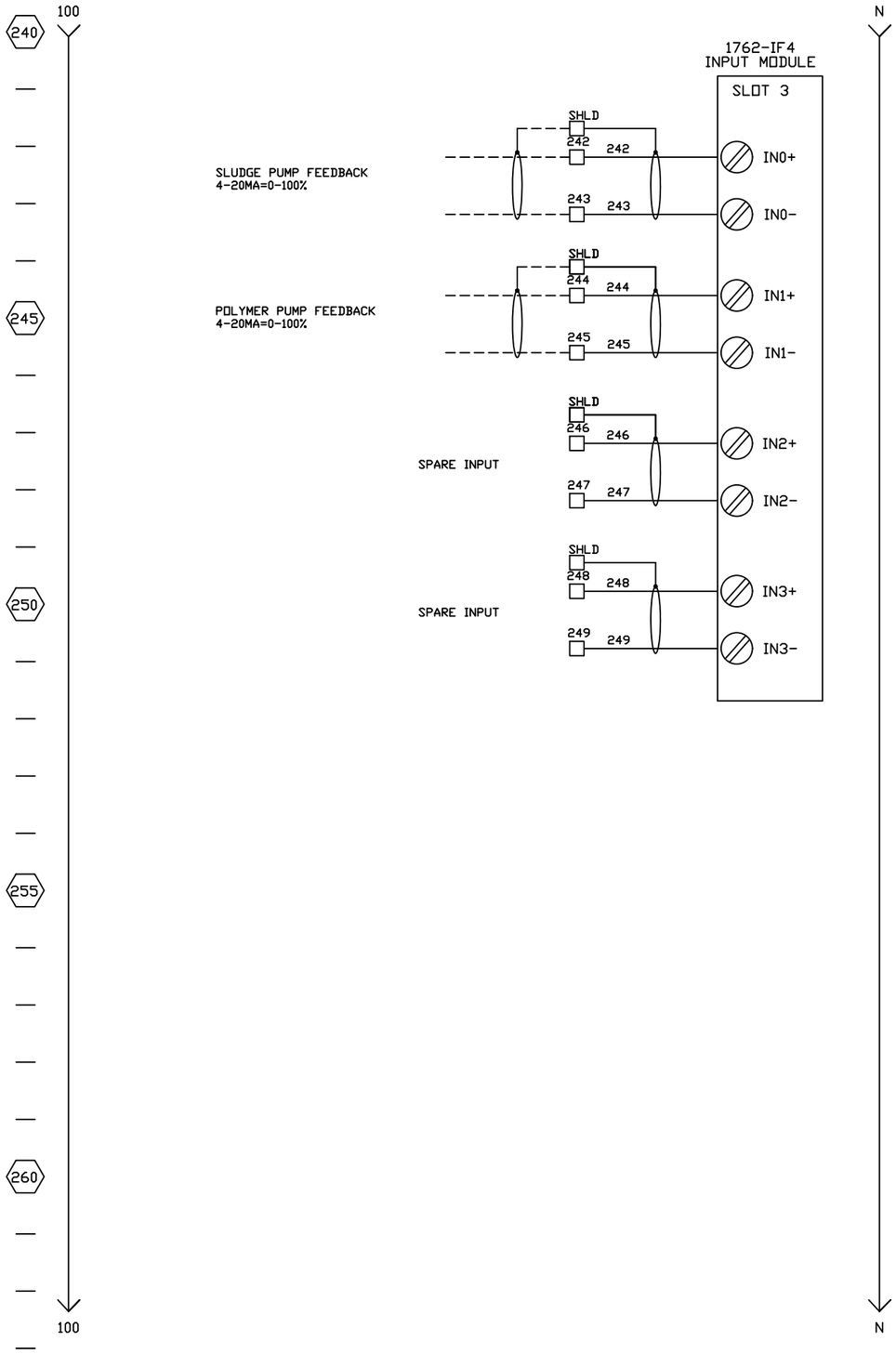

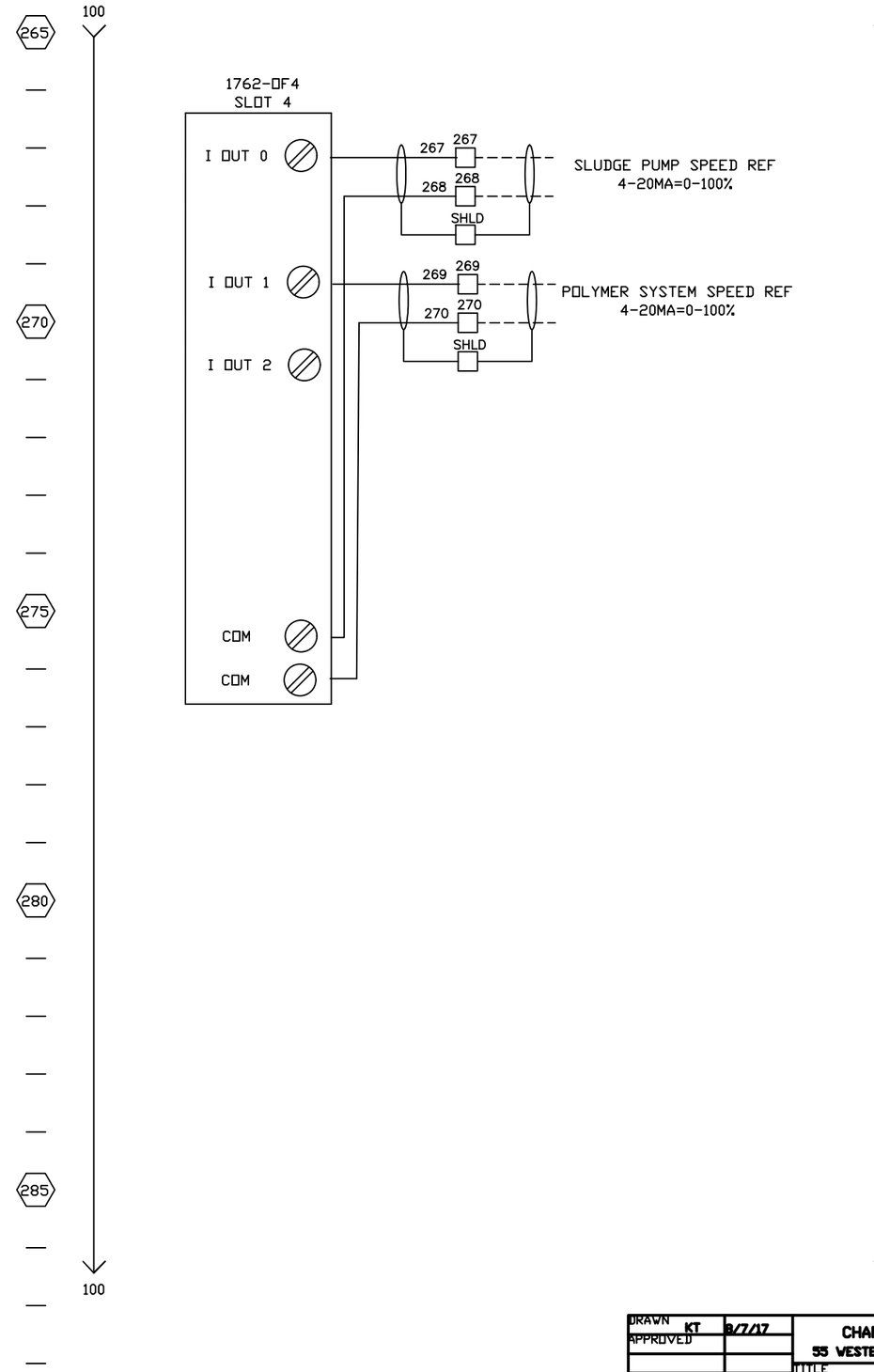

DRAWN	KT	8/7/17	CHARTER MACHINE COMPANY
APPROVED			55 WESTER AVE METUCHEN N.J. 08840
			TITLE: IOWA CITY, IOWA 3BTP22.93 CONTROL LOGIC
G.E.C. TOLERANCES UNLESS OTHERWISE SPECIFIED			SIZE B | DWG NO. 770-K-0105 | REV 0
FRACTIONAL DIM ±1/64			SCALE NONE | SHEET 5 OF 7
DECIMAL DIM ±.005			
ANGLE ± 1/2			
SURFACE FINISH 125			

This Page Intentionally Left Blank

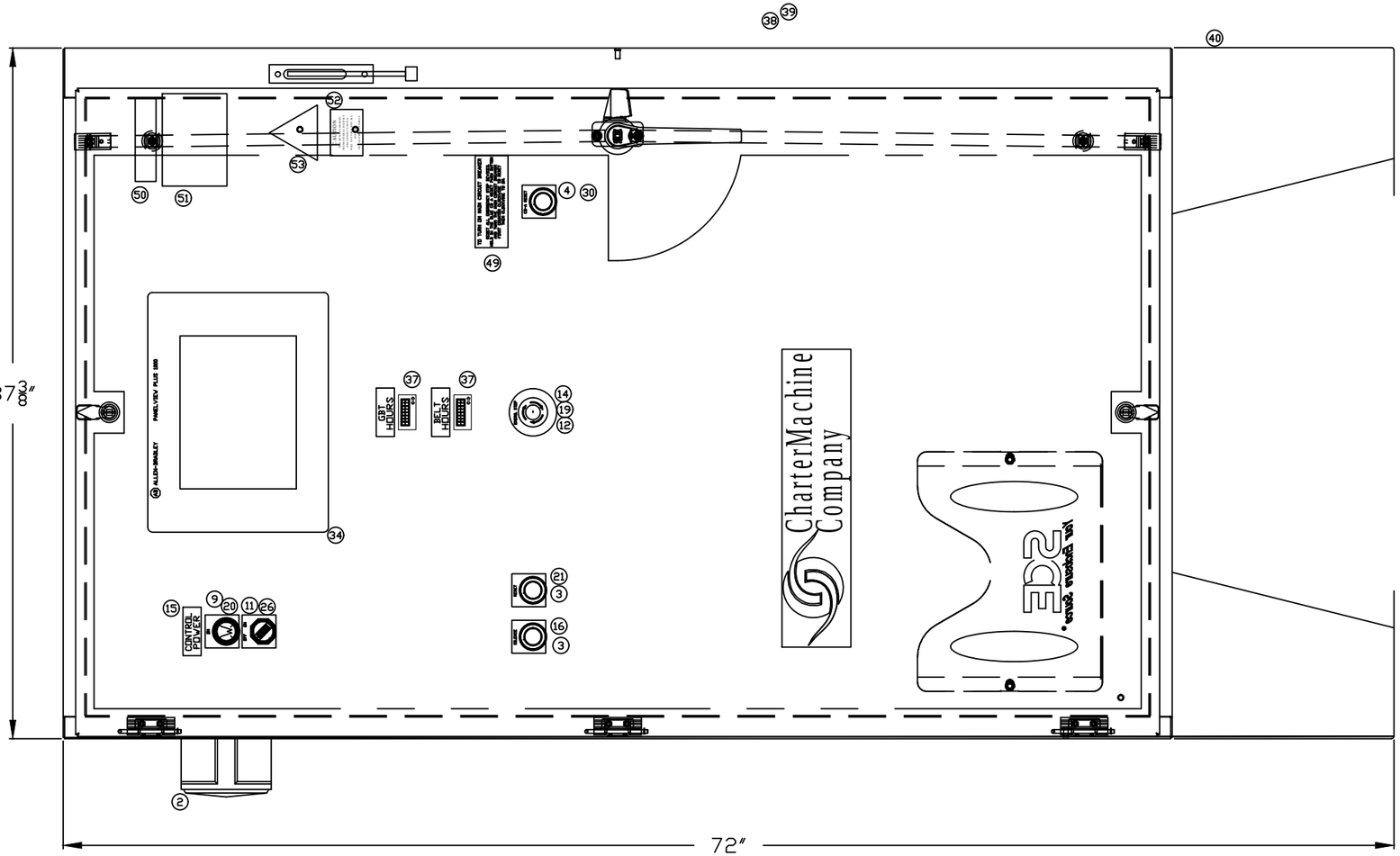

NOTE: 60" X 37 3/8" X 12" NEMA 4X ENCLOSURE MOUNTED ON 12" LEG KIT.

1			
2	1	876-N5	EDWARDS ALARM HORN
3	2	ABD111N-B	IDEC PUSHBUTTON BLACK FLUSH HEAD 1NO1NC
4	1	ABD110N-S	IDEC PUSHBUTTON BLUE FLUSH HEAD 1NO
5			
6			
7			
8			
9	1	APD199DN-W-120	IDEC PILOT LIGHT WHITE LED 120VAC
10			
11	1	ASD211N	IDEC SELECTOR SWITCH 2POS 1NO1NC
12	1	AVD311NR	IDEC MUSH HEAD RED TWIST REL 1NO1NC
13			
14	1	BST-001	IDEC NC CONTACT BLOCK
15	3	NAME TAG	3/4"X2" CUSTOM ENGRAVED NAME TAG SEE DWG
16	1	800H-W100*004	ENGRAVED LEGEND "SILENCE" 30MM
17			
18			
19	1	800T-X646	YELLOW BLANK "EMERGENCY STOP" 30MM
20	1	800H-W117	ENGRAVED LEGEND "ON" 30MM
21	1	800H-W121	ENGRAVED LEGEND "RESET" 30MM
22			
23			
24			
25			
26	1	800H-W133	ENGRAVED LEGEND "OFF-ON" 30MM
27			
28			
29			
30	1	800H-W100E*023	ENGRAVED LEGEND "CB-A RESET" 30MM
31			
32			
33			
34	1	2711P-T10C21D8S	ALLEN-BRADLEY PANEL VIEW PLUS 7 MODEL 1000
35	1	2711P-RSACDIN	ALLEN-BRADLEY 28VDC POWER SUPPLY
36	1	1784-SD1	ALLEN-BRADLEY SD CARD
37	2	H7ET-N-B	SELF POWERED TIMER COUNTER
38	1	SCE-60XEL3712SSLP	SAGINAW 60 X 37 X 12 NEMA 4X SS ENCLOSURE
39	1	SCE-60P36	SAGINAW 57 X 33 SUBPANEL
40	1	FKD001	CMC 12 X 12 304SS FLOOR STAND KIT
41			
42			
43			
44			
45			
46			
47			
48			
49	1	CB-RESET-TAG	CIRCUIT BREAKER RESET TAG
50	1	44214	460 VOLT RED LABEL 1-1/8 IN X 4-1/2 IN
51	1	80026	ARC FLASH AND SHOCK HAZARD STICKER 3-1/2" X 5"
52	1	L123F	CAUTION LABEL MULTIPLE POWER SOURCES
53	1	PESW-D-1	ISO TRIANGLE WARNING LABEL - LARGE
54			
55			

DRAWN KT 8/7/17
APPROVED

G.E.C. TOLERANCES UNLESS OTHERWISE SPECIFIED
FRACTIONAL DIM ±1/64
DECIMAL DIM ±.005
ANGLE ± 1/2
SURFACE FINISH 125

CHARTER MACHINE COMPANY
55 WESTER AVE METUCHEN N.J. 08840

TITLE
IOWA CITY, IOWA
3BTP22.93
PANEL FACE ARRANGEMENT

SIZE B | DWG NO. 770-K-0106 | REV 0
SCALE NONE | SHEET 6 OF 7

This Page Intentionally Left Blank

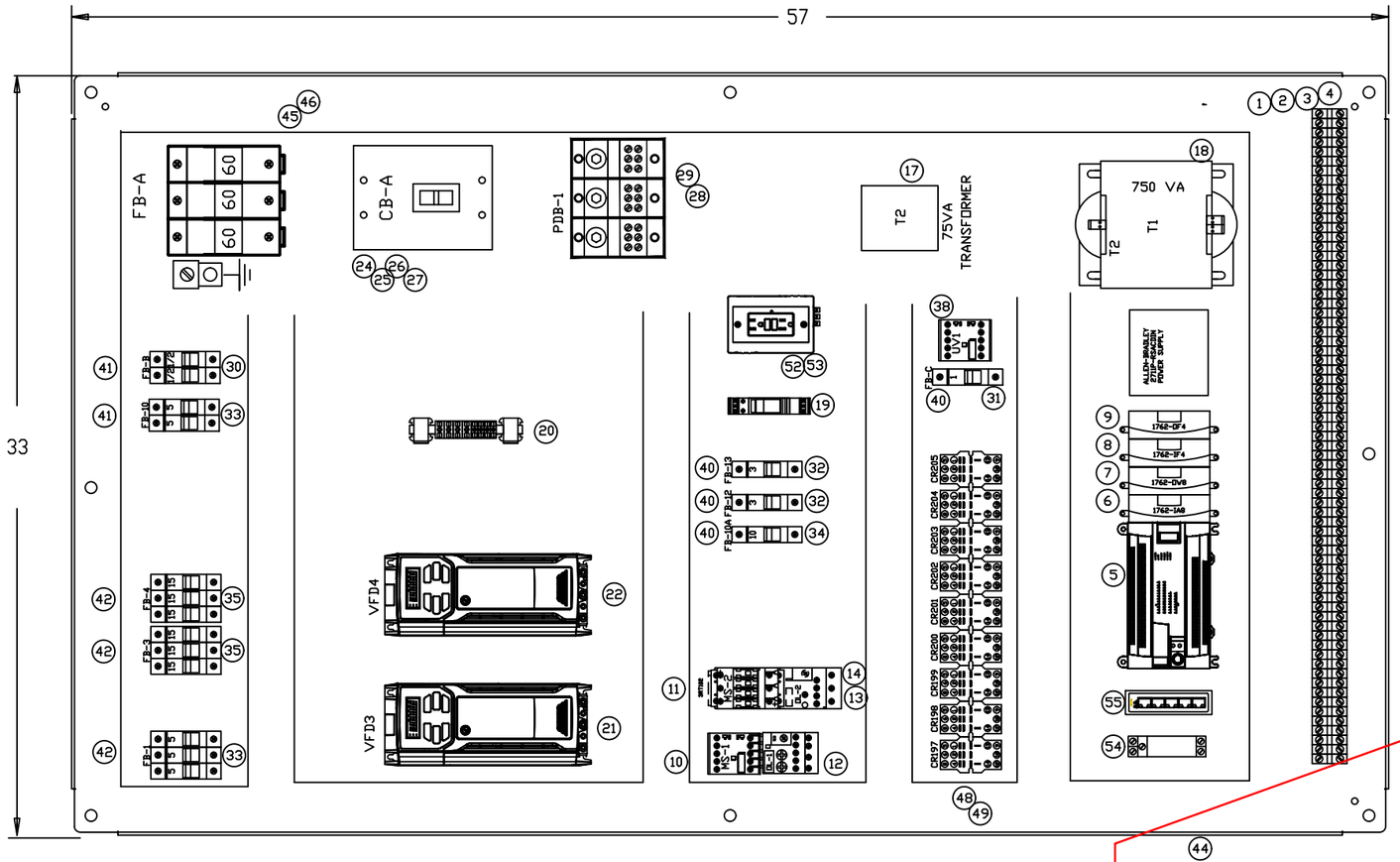

1	80	1492-HM1	AB TERMINAL BLOCKS
2	3	1492-N22	AB TERMINAL BLOCK RIGID MOUNTING RAIL
3	4	1492-N23	AB TERMINAL BLOCK END ANCHOR
4	2	1492-NM36	AB TERMINAL BLOCKEND BARRIER
5	1	1766-L32AWAA	AB MICROLOGIX 1400 PLC 115VAC
6	1	1762-IA8	AB MICROLOGIX CONTACT AC INPUT MODULE
7	1	1762-OW8	AB MICROLOGIX CONTACT OUTPUT MODULE
8	1	1762-IF4	AB MICROLOGIX ANALOG INPUT MODULE
9	1	1762-OF4	AB MICROLOGIX ANALOG OUTPUT MODULE
10	1	3RT2016-1AK61	SIEMENS 3HP, 9A IEC CONTACTOR 120VAC COIL
11	1	3RT2026-1AK60	SIEMENS 10HP, 22A IEC CONTACTOR 120VAC COIL
12	1	3RU2116-1DB0	SIEMENS IEC OVERLOAD 2.2-3.2A
13	1	3RU2126-4AB0	SIEMENS IEC OVERLOAD 11-16A
14	1	3RH-2921-1FA22	SIEMENS AUX CONTACT 2NO-2NC
15			
16			
17	1	B075BTZ13JK	MICRON 75 VA CONTROL TRANSFORMER
18	1	B750BTZ13JKF	MICRON 750 VA CONTROL TRANSFORMER
19	1	PLT-SEC-T3-120-FM	PHOENIX SURGE ARRESTER 2905228 120VAC
20	1	GRNDBAR	ISOLATED GROUND BAR ASSEMBLY
21	1	03400073A	CONTROL TECHNIQUES M200 DRIVE 3 HP
22	1	03400094A	CONTROL TECHNIQUES M200 DRIVE 7.5 HP
23			
24	1	TS3N030TW-U4	ABB 30 AMP 3 POLE BREAKER W/ UNDER VOLT TRIP
25	1	MKCT4	ABB DISC HANDLE KIT MECHANISM
26	1	OXC1L48	ABB DISC CABLE 48 INCHES
27	1	OHF1C4	ABB DISC HANDLE MECHANISM NEMA 4X
28	1	MPDB67563	MERSEN DIST BLOCK 3P (1)2/0-#14 TO (4)#2-#14
29	3	MPDBC6667	MERSEN MEDIUM PDB COVER
30	2	ATDR-1/2	FERRAZ SHAWMUT CLASS CC FUSE 1/2A
31	1	ATDR-1	FERRAZ SHAWMUT CLASS CC FUSE 1A
32	2	ATDR-3	FERRAZ SHAWMUT CLASS CC FUSE 3A
33	5	ATDR-5	FERRAZ SHAWMUT CLASS CC FUSE 5A
34	1	ATDR-10	FERRAZ SHAWMUT CLASS CC FUSE 10A
35	6	ATDR-15	FERRAZ SHAWMUT CLASS CC FUSE 15A
36			
37			
38	1	CS8-40E-120	SPRECHER & SCHUH RELAY
39			
40	4	LPSC001ID	LITTLEFUSE CLASS CC FUSE BLOCK 1 POLE
41	2	LPSC002ID	LITTLEFUSE CLASS CC FUSE BLOCK 2 POLE
42	3	LPSC003ID	LITTLEFUSE CLASS CC FUSE BLOCK 3 POLE
43			
44	REF	SCE-60P36	SAGINAW 57 X 33 SUBPANEL
45	3	AJT40	FERRAZ SHAWMUT CLASS JJ FUSE 60A
46	1	LPSJ60-3ID	LITTLEFUSE CLASS JJ FUSE BLOCK 3 POLE 40 AMP
47			
48	9	RH3B-UL120AC	IDEC 3PDT PLUG IN RELAY 120V 10A
49	9	SH3B-05C	IDEC 3PDT RELAY SOCKET
50			
51			
52	1	1595	P&S 115VAC 15A GFCI DUPLEX RECEPTACLE
53	1	E980DFN	CARLON PVC FSE BOX 1 HOLE 1/2"
54	1	S8VK-G01524	OMRON 24VDC POWER SUPPLY
55	1	IES-150B	INDUSTRIAL ETHERNET SWITCH

Note: 33"Wx57"H back-panel ("subpanel") dimensions are acceptable, as this size matches what is to be replaced inside each of the existing Master BFP Control Panels.
No other schematic/logic sheet comments are made by myself, as control system hardware comments are already made herein.
-ZMC/SCI 20170816.

FABRICATION NOTES:

1. ALL POWER WIRING SHALL BE STRANDED COPPER, 600 VOLT MTW SIZED ACCORDING TO LOAD.
2. ALL CONTROL WIRING SHALL BE STRANDED COPPER, 600 VOLT MTW #16 AWG UNLESS OTHERWISE NOTED.
3. ALL INSTRUMENT WIRING SHALL BE STRANDED COPPER, #18 AWG TWO OR THREE CONDUCTOR SHIELDED WITH OVERALL JACKET UNLESS OTHERWISE NOTED.
4. CONDUCTORS SHALL BE MARKED AT EACH TERMINATION POINT WITH MACHINE PRINTED ADHESIVE WIRE MARKERS.
5. SUB-PANEL MOUNTED COMPONENTS SHALL BE MARKED WITH MACHINE PRINTED ADHESIVE LABELS.
6. SUB-PANEL RACEWAYS SHALL BE PLASTIC WIRE DUCT WITH COVERS.
7. DOOR WIRING SHALL BE NEATLY BUNDLED AND SUPPORTED WITH NYLON WIRE TIES.
8. TERMINAL BLOCKS SHALL BE 600 VOLTS, 55 AMP TUBULAR SCREW WITH PRESSURE PLATE.

DRAWN	KT	8/7/17
APPROVED		

G.E.C. TOLERANCES UNLESS OTHERWISE SPECIFIED
FRACTIONAL DIM ±1/64
DECIMAL DIM ±.005
ANGLE ± 1/2
SURFACE FINISH 125

CHARTER MACHINE COMPANY
55 WESTER AVE METUCHEN N.J. 08840

TITLE
IOWA CITY, IOWA
3BTP22.93
SUB-PANEL LAYOUT

SIZE	DWG NO.	REV
B	722-K-0107	0

SCALE NONE SHEET 7 OF 7

This Page Intentionally Left Blank

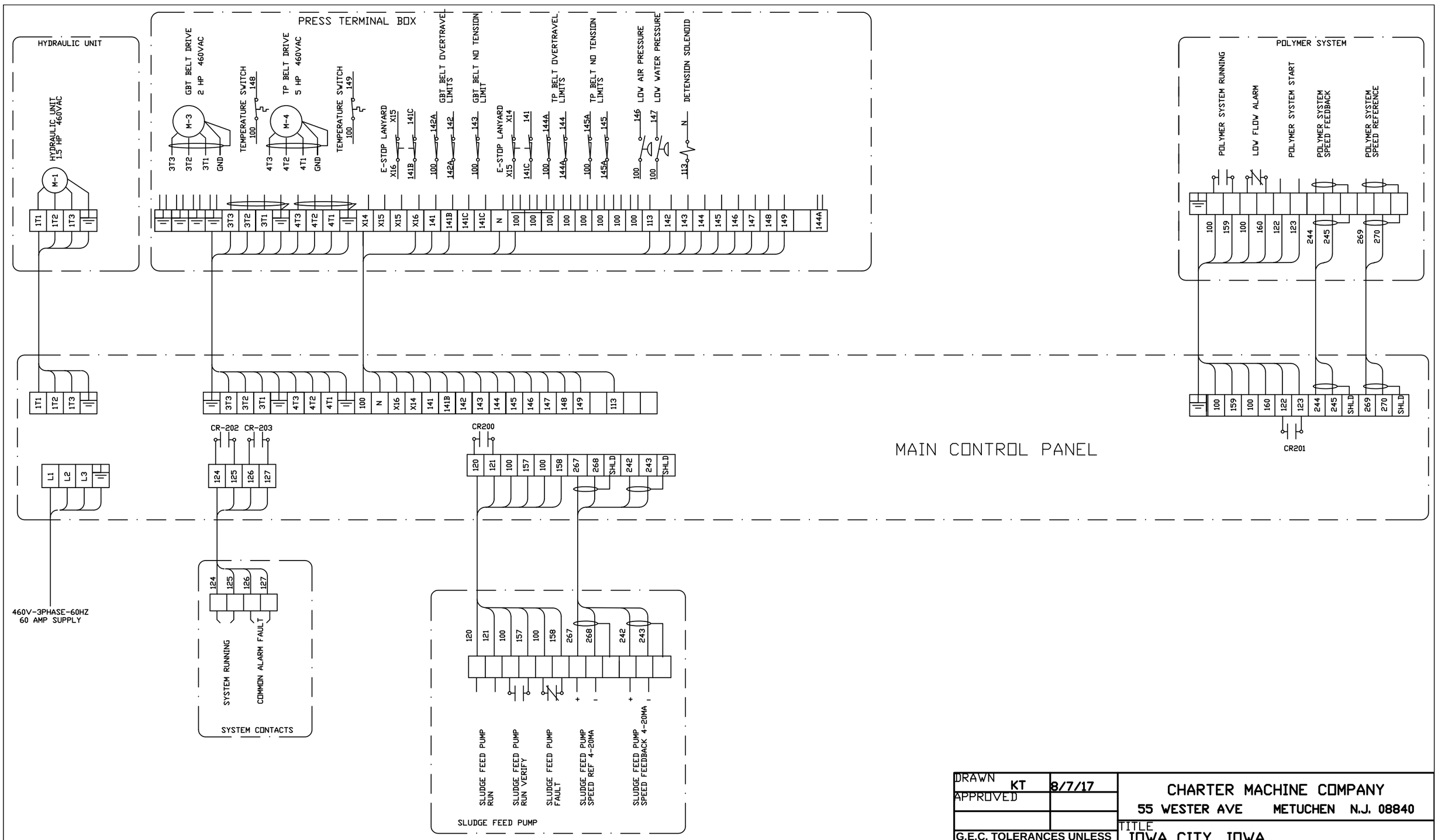

DRAWN	KT	8/7/17
APPROVED		
G.E.C. TOLERANCES UNLESS OTHERWISE SPECIFIED		
FRACTIONAL DIM	±1/64	
DECIMAL DIM	±.005	
ANGLE	± 1/2	
SURFACE FINISH	125	

CHARTER MACHINE COMPANY
55 WESTER AVE METUCHEN N.J. 08840

TITLE
IOWA CITY, IOWA
3BTP22.93
TERMINATION DIAGRAM

SIZE	DWG NO.	REV
B	770-K-0101-INT	0

SCALE NONE SHEET 1 OF 1

This Page Intentionally Left Blank

CONTROL POWER

BELT HOURS

GBT HOURS

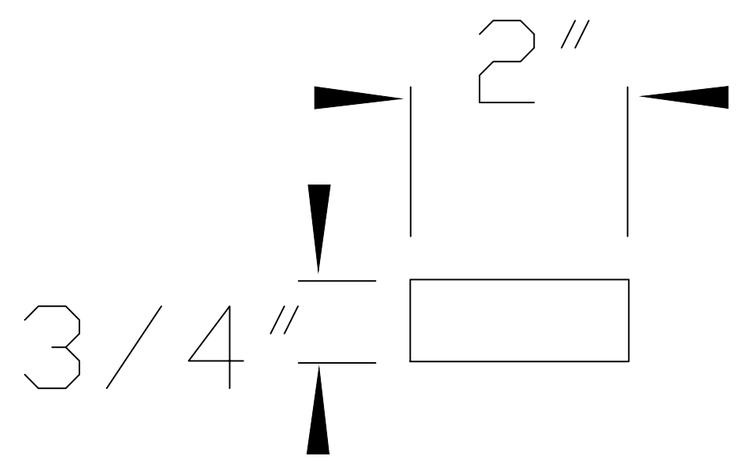

3/4″ X 2″ENGRAVED NAME TAGS
BLACK LETTERING ON WHITE BACKGROUND

DRAWN	KT	8/7/17
APPROVED		

G.E.C. TOLERANCES UNLESS OTHERWISE SPECIFIED
FRACTIONAL DIM ±1/64
DECIMAL DIM ±.005
ANGLE ± 1/2
SURFACE FINISH 125

CHARTER MACHINE COMPANY
55 WESTER AVE METUCHEN N.J. 08840

TITLE
IOWA CITY, IOWA
3BTP22.93
NAME TAGS

SIZE		DWG NO.	REV
B		770-K-0101-TAGS	0

SCALE NONE SHEET 1 OF 1

This Page Left Blank Intentionally

800/292-8989
TOLL FREE
CALL - BEFORE - YOU DIG

CONTRACTOR RESPONSIBLE FOR LOCATING ALL UTILITIES PRIOR TO CONSTRUCTION.

- SOUTH WASTEWATER TREATMENT PLANT:
  4366 NAPOLEON ST. S.E.
  IOWA CITY, IOWA 52240-8201

CITY OF IOWA CITY
BELT FILTER PRESS REPLACEMENT PROJECT

4366 Napoleon St SE, Iowa City, IA 52240
IOWA CITY, IOWA

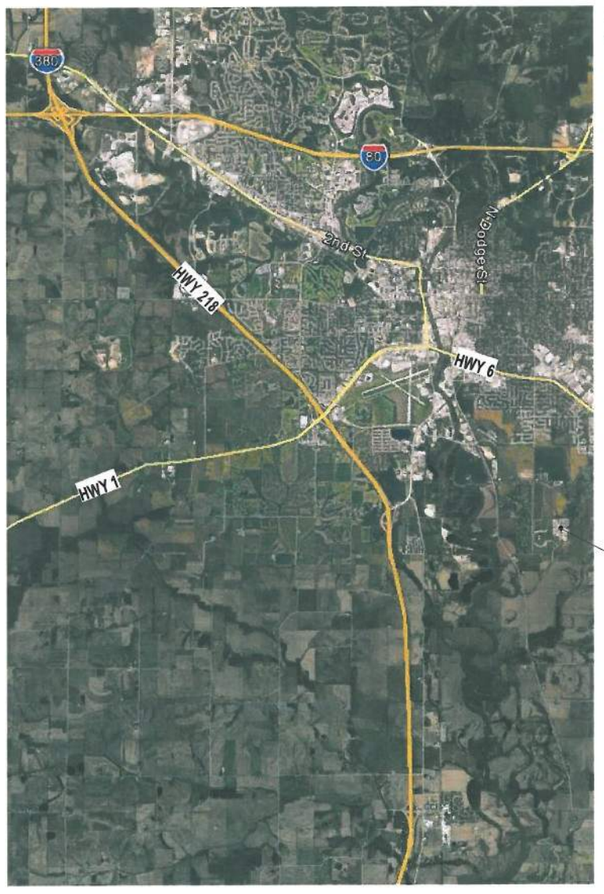

VICINITY MAP

SOUTH WASTEWATER TREATMENT FACILITIES LOCATION MAP

I HEREBY CERTIFY THAT REVISION 0 TO THIS ENGINEERING DOCUMENT WAS PREPARED BY ME OR UNDER MY DIRECT PERSONAL SUPERVISION AND THAT I AM A DULY LICENSED PROFESSIONAL ENGINEER UNDER THE LAWS OF THE STATE OF IOWA.
LANE E. INGRAM 06/30/2017
LICENSE NUMBER: 17388 MY LICENSE RENEWAL DATE IS: 12/31/18
PAGES OR SHEETS COVERED BY THIS SEAL:
G0, E1, E2, E3, E4, E5

I HEREBY CERTIFY THAT REVISION 0 TO THIS ENGINEERING DOCUMENT WAS PREPARED BY ME OR UNDER MY DIRECT PERSONAL SUPERVISION AND THAT I AM A DULY LICENSED PROFESSIONAL ENGINEER UNDER THE LAWS OF THE STATE OF IOWA.
~~ENRIQUE HUMBERTO~~ 06/30/2017
LICENSE NUMBER: 17247 MY LICENSE RENEWAL DATE IS: 06/30/18
PAGES OR SHEETS COVERED BY THIS SEAL:
D1, ~~B1~~, S2, S3, S4

I HEREBY CERTIFY THAT REVISION 0 TO THIS ENGINEERING DOCUMENT WAS PREPARED BY ME OR UNDER MY DIRECT PERSONAL SUPERVISION AND THAT I AM A DULY LICENSED PROFESSIONAL ENGINEER UNDER THE LAWS OF THE STATE OF IOWA.
JON J. BOVENKAMP 06/30/2017
LICENSE NUMBER: 15551 MY LICENSE RENEWAL DATE IS: 12/31/18
PAGES OR SHEETS COVERED BY THIS SEAL:
M2, M6, M7, M8

I HEREBY CERTIFY THAT REVISION 0 TO THIS ENGINEERING DOCUMENT WAS PREPARED BY ME OR UNDER MY DIRECT PERSONAL SUPERVISION AND THAT I AM A DULY LICENSED PROFESSIONAL ENGINEER UNDER THE LAWS OF THE STATE OF IOWA.
JAY M. BRADY 06/30/2017
LICENSE NUMBER: 13163 MY LICENSE RENEWAL DATE IS: 12/31/18
PAGES OR SHEETS COVERED BY THIS SEAL:
G1,G2, G3,G4,G5,G6, D2, C1, M1, M3, M4, M5

I HEREBY CERTIFY THAT REVISION 1 TO THIS ENGINEERING DOCUMENT WAS PREPARED BY ME OR UNDER MY DIRECT PERSONAL SUPERVISION AND THAT I AM A DULY LICENSED PROFESSIONAL ENGINEER UNDER THE LAWS OF THE STATE OF IOWA.
JON J. BOVENKAMP 10/5/17 10/05/2017
LICENSE NUMBER: 15551 MY LICENSE RENEWAL DATE IS: 12/31/18
PAGES OR SHEETS COVERED BY THIS SEAL:
M11

I HEREBY CERTIFY THAT REVISION 1 TO THIS ENGINEERING DOCUMENT WAS PREPARED BY ME OR UNDER MY DIRECT PERSONAL SUPERVISION AND THAT I AM A DULY LICENSED PROFESSIONAL ENGINEER UNDER THE LAWS OF THE STATE OF IOWA.
JAY M. BRADY 10/5/17 10/05/2017
LICENSE NUMBER: 13163 MY LICENSE RENEWAL DATE IS: 12/31/18
PAGES OR SHEETS COVERED BY THIS SEAL:
G1, G2, D2, M3, M4, M10

NO.	DESCRIPTION	DSGN	CHKD	APVD	DATE
1	ADDENDUM 1	JB	DM	JB	10/05/2017
0	ISSUED FOR CONSTRUCTION	JB	DM	JB	06/30/2017

Stanley Consultants INC.
225 Iowa Avenue, Muscatine, Iowa 52761-3764
www.stanleyconsultants.com

CITY OF IOWA CITY WASTEWATER
BELT FILTER PRESS REPLACEMENT PROJECT
IOWA CITY, IOWA

COVER AND VICINITY MAP

DESIGNED	J.BRADY
DRAWN	D.SCHMIDT
CHECKED	D.MATHIAS
APPROVED	J.BRADY
APPROVED	
DATE	AUGUST 30, 2017

SCALE: As indicated
NO. 2671001
REV. 1
G1

AT FULL SIZE
0 1 2 3 IN
0 1 2 3 4 5 6 7 8 cm

C4DD 03.R4

© STANLEY CONSULTANTS

DRAWING INDEX

SHEET NO.	SHEET NAME
G1	COVER AND VICINITY MAP
G2	INDEX
G3	GENERAL LEGEND
G4	ABBREVIATIONS - SHEET 1
G5	ABBREVIATIONS - SHEET 2
G6	PIPING SYSTEM AND EQUIPMENT CODES
D1	ARCHITECTURAL AND STRUCTURAL DEMOLITION PLAN AND ELEVATION
D2	MECHANICAL AND ELECTRICAL DEMOLITION PLAN AND ELEVATION
D3	MECHANICAL AND ELECTRICAL - DEMOLITION SECTIONS
C1	SITE PLAN
S1	STRUCTURAL NOTES AND LEGEND - SHEET 1
S2	STRUCTURAL NOTES AND LEGEND - SHEET 2
S3	STRUCTURAL MODIFICATIONS PLAN
S4	STRUCTURAL MODIFICATION DETAILS
A1	ARCHITECTURAL PLAN AND ELEVATION
M1	MECHANICAL LEGEND - SHEET 1
M2	MECHANICAL LEGEND - SHEET 2
M3	BELT FILTER PRESS - GENERAL ARRANGEMENT
M4	BELT FILTER PRESS - SECTIONS
M6	BELT FILTER PRESS - HVAC PLAN
M7	BELT FILTER PRESS - HVAC SECTIONS
M8	BELT FILTER PRESS - HVAC SCHEDULES AND DETAILS
M9	DIGESTER BUILDING MECHANICAL DEMOLITION PLAN
M10	DIGESTER BUILDING MECHANICAL PLAN AND SECTIONS
M11	SLUDGE PROCESSING FACILITY PARTIAL HVAC PLAN
E1	ELECTRICAL NOTES AND LEGEND SHEET 1
E2	ELECTRICAL NOTES AND LEGEND SHEET 2
E3	ELECTRICAL ONE-LINES
E4	BELT FILTER PRESS - ELECTRICAL PLAN
E5	DIGESTER BUILDING ELECTRICAL PLANS

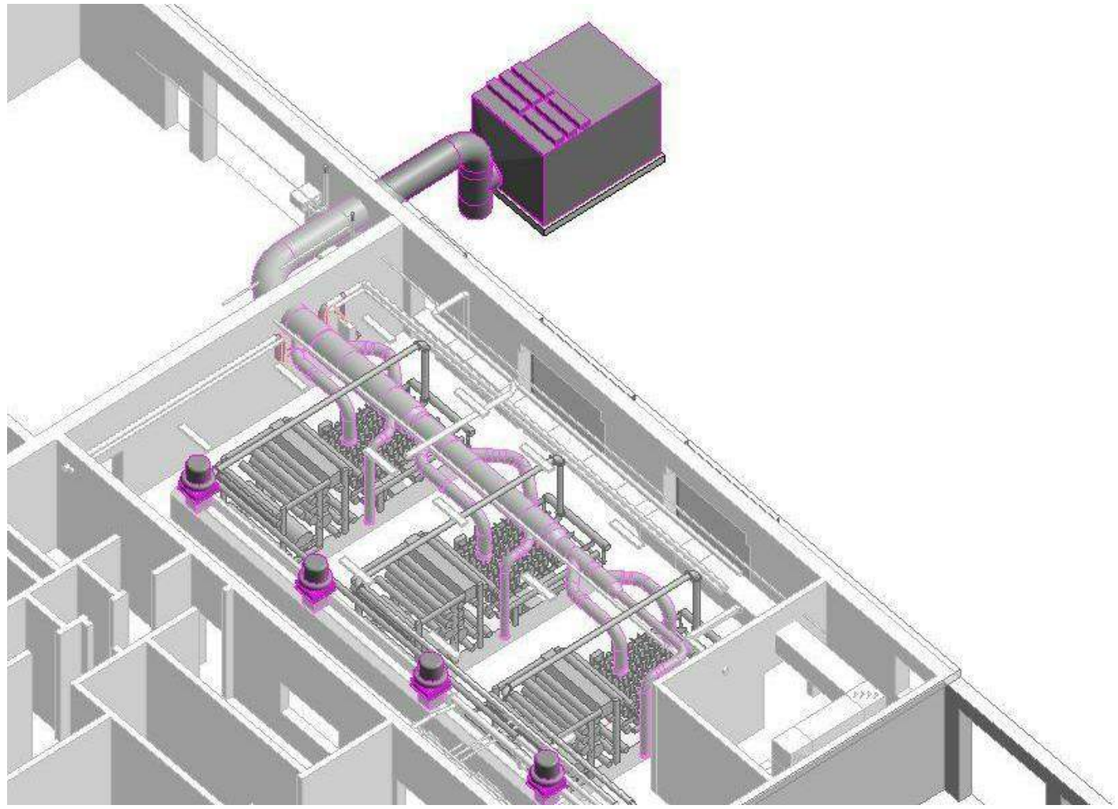

3-DIMENSIONAL VIEW OF NEW BELT FILTER PRESS

REFERENCE DRAWINGS

STANLEY CONSULTANTS
C3

METCALF & EDDY
A-S5
A-S8

CHARTER MACHINE COMPANY
770-K-1Line
770-K-0101
770-K-0101-INT
TP00.4-B-031

NO.	DESCRIPTION	DSGN	CHKD	APVD	DATE
1	ADDENDUM 1	JB	DM	JB	10/05/2017
0	ISSUED FOR CONSTRUCTION	JB	DM	JB	08/30/2017

Stanley Consultants INC.
225 Iowa Avenue, Muscatine, Iowa 52761-3764
www.stanleyconsultants.com

CITY OF IOWA CITY WASTEWATER
BELT FILTER PRESS REPLACEMENT PROJECT
IOWA CITY, IOWA

INDEX

DESIGNED J.BRADY
DRAWN D.SCHMIDT
CHECKED D. MATHIAS
APPROVED J.BRADY
APPROVED
DATE AUGUST 30, 2017

SCALE:
NO. 2671001
G2
REV. 1

AT FULL SIZE
0 1 2 3 IN
0 1 2 3 4 5 6 7 8 cm

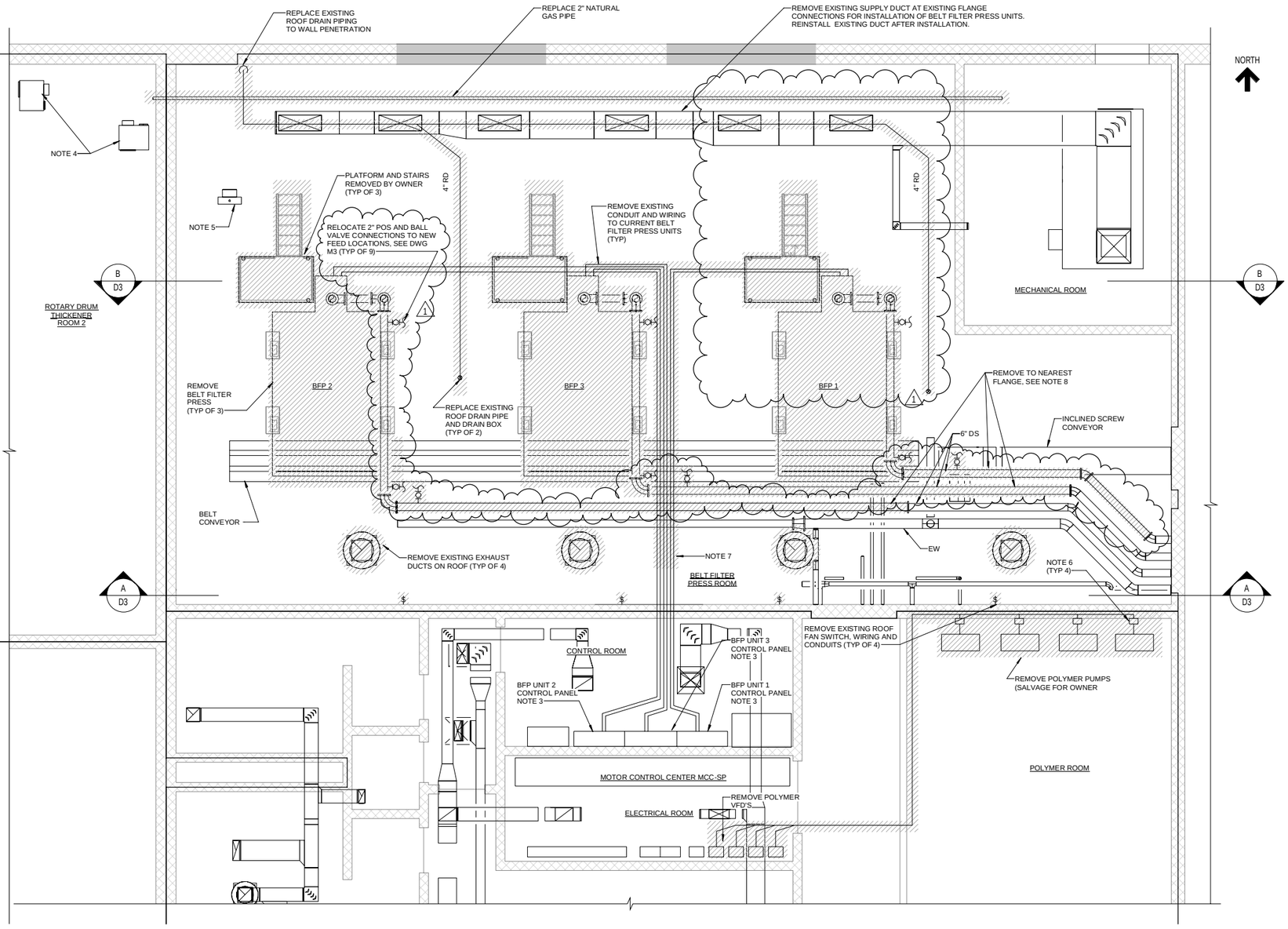

SLUDGE PROCESSING FACILITY
MECHANICAL AND ELECTRICAL DEMOLITION PLAN

SCALE: 1/4" = 1'-0"

GENERAL NOTES:

1. REMOVE ALL EXISTING INSULATION ON HWS, HWR AND CW PIPES AND FITTINGS IN BELT FILTER PRESS ROOM. CLEAN EXTERIOR OF PIPE AS SPECIFIED AND PAINT PIPE IN COLOR SPECIFIED BY OWNER. AFTER PAINTING REINSULATE PIPE AND FITTINGS AS SPECIFIED.
2. REMOVE AND REPLACE ALL EXISTING THREADED RODS AND STRUCTURAL SUPPORTS ANCHORED FROM THE CEILING IN THE BELT FILTER PRESS ROOM. NEW ANCHORS, SUPPORTS AND STRUCTURAL SUPPORTS SHALL BE AS SPECIFIED.
3. DEMO INTERIOR OF EXISTING BELT FILTER PRESS CONTROL CABINET. CABINET SHALL BE REUSED. COORDINATE WITH DRAWING E4.
4. RELOCATE TWO GAS FIRED UNIT HEATERS AS NEEDED TO ALLOW FOR BELT FILTER PRESS ODOR CONTROL DUCT INSTALLATION. COORDINATE WITH HVAC DRAWINGS M8.
5. RELOCATE ONE HOT WATER UNIT HEATER AS NEEDED TO ALLOW FOR BELT FILTER PRESS ODOR CONTROL DUCT INSTALLATION. COORDINATE WITH HVAC DRAWINGS M8.
6. COORDINATE WITH OWNER (SHAUN DALY) AND RELOCATE THE EXISTING HOA STATION MOUNTED NEAR THE POLYMER PUMP TO A LOCATION ADJACENT TO THE POLYMER PUMP VFD'S LOCATED IN THE ELECTRICAL ROOM.
7. DEMO FIELD WIRING FROM CONTROL PANEL TO BFP UNITS. DEMO CONDUIT TO THE EXISTING BFP UNITS TO ALLOW INSTALLATION OF NEW BFP UNITS. CONDUIITS THROUGH CONTROL ROOM WALL MAY BE REUSED. COORDINATE WITH DRAWING E4.
8. MODIFY EXISTING 2" POS PIPING TO CONNECT TO NEW INJECTION LOCATIONS SHOWN ON DRAWING M3.
   A. EXISITNG POS SYSTEM HAS DISTRIBUTION TO 3 INJECTION LOCATIONS FOR EACH BFP.
   B. EACH INJECTION LOCATION HAS A 2" BALL SHUTTOFF VALVE ON THE POS.

NO.	DESCRIPTION	DSGN	CHKD	APVD	DATE
1	ADDENDUM 1	JB	DM	JB	10/05/2017
0	ISSUED FOR CONSTRUCTION	JB/JG	DM/LI	JB/LI	08/30/2017

Stanley Consultants INC.
225 Iowa Avenue, Muscatine, Iowa 52761-3764
www.stanleyconsultants.com

CITY OF IOWA CITY WASTEWATER
BELT FILTER PRESS REPLACEMENT PROJECT
IOWA CITY, IOWA

MECHANICAL AND ELECTRICAL DEMOLITION PLAN AND ELEVATION

DESIGNED J.BRADY / J.GAVIN
DRAWN D.SCHMIDT
CHECKED D.MATHIAS / L.INGRAM
APPROVED J.BRADY / L.INGRAM
APPROVED
DATE AUGUST 30, 2017

SCALE: 1/4" = 1'-0"
NO. 2671001
REV. 1
D2

AT FULL SIZE
0 1 2 3 IN
0 1 2 3 4 5 6 7 8 cm

CAD ID: R4

GENERAL NOTES:

1. EACH BFP DS FEED PIPE SHALL BE EQUIPPED WITH 3 POLYMER INJECTION FEED LOCATIONS.
2. THE POLYMER INJECTION FEED SHALL INCLUDE 19" LONG INLINE MIXER WITH POLYMER INJECTION RING (SEE CHARTER MACHINE COMPANY REFERENCE DRAWING TP00.4-B-031), ONE PER PRESS (3 TOTAL).
3. CONTRACTOR SHALL SUPPLY AND INSTALL 2-19" LONG 6" DIAMETER FLANGED SPOOL PIECES PER PRESS (6 TOTAL) AT THE REMAINING POLYMER INJECTION LOCATIONS.
4. MODIFY EXISTING POLYMER SOLUTION (POS) SYSTEM TO ROUTE EACH BFP POLYMER FEED TO ITS 3 INJECTION LOCATIONS (9 TOTAL). PROVIDE A 2" BALL VALVE AT EACH INJECTON LOCATION. REVISING EXISTING BALL VALVES IN GOOD CONDITION AND OPERABLE IS PERMISSABLE.
5. DURING STARTUP, ASSIST BFP SUPPLIER WITH POLYMER OPTIMIZATION BY REMOVING SPOOL PIECES AND SWITCHING INLINE MIXER ASSEMBLY LOCATIONS TO DETERMINE BEST LOCATION IN THE SLUDGE PIPING FOR OPTIMAL PERFORMANCE. REINSTALL SPOOL PIECES AND MIXING ASSEMBLIES TO PROVIDE FINAL SYSTEM CONFIGURATION.

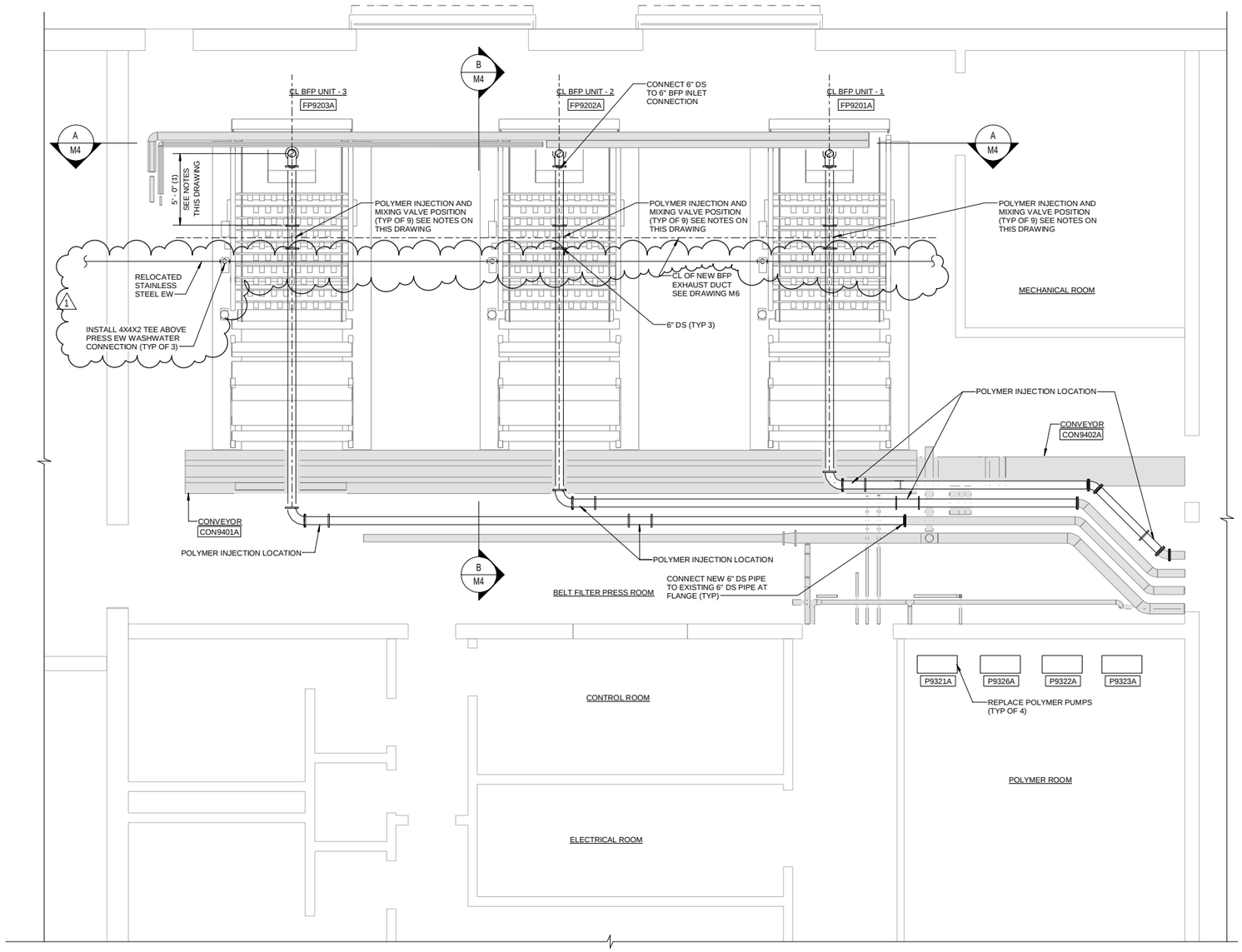

BELT FILTER PRESS - GENERAL ARRANGEMENT
SCALE: 1/4" = 1'-0"

NO.	DESCRIPTION	DSGN	CHKD	APVD	DATE
1	ADDENDUM 1	JB	DM	JB	10/05/2017
0	ISSUED FOR CONSTRUCTION	JB	DM	JB	08/30/2017

Stanley Consultants INC.
225 Iowa Avenue, Muscatine, Iowa 52761-3764
www.stanleyconsultants.com

CITY OF IOWA CITY WASTEWATER
BELT FILTER PRESS REPLACEMENT PROJECT
IOWA CITY, IOWA

BELT FILTER PRESS - GENERAL ARRANGEMENT

DESIGNED	J.BRADY
DRAWN	D.SCHMIDT
CHECKED	D.MATHIAS
APPROVED	J.BRADY
APPROVED	
DATE	AUGUST 30, 2017

SCALE: 1/4" = 1'-0"
NO. 2671001
REV. 1
M3

AT FULL SIZE
0 1 2 3 IN
0 1 2 3 4 5 6 7 8 cm

STANLEY CONSULTANTS

CAD ID: I:R4

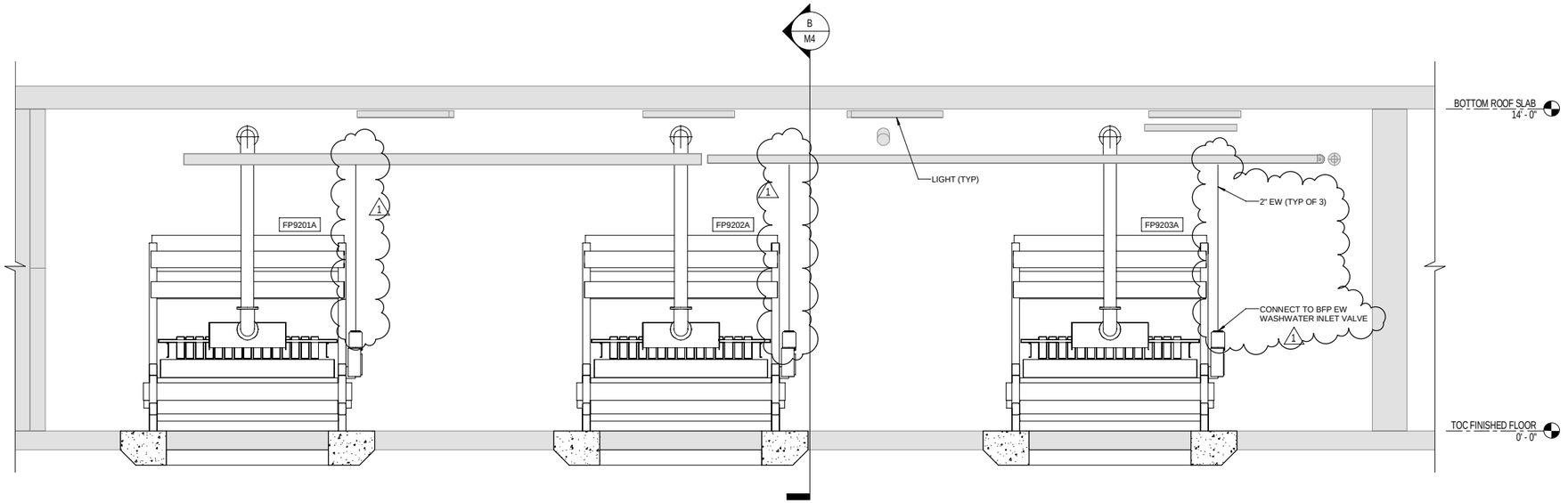

SECTION A-M4
SCALE: 3/8" = 1'-0" M3

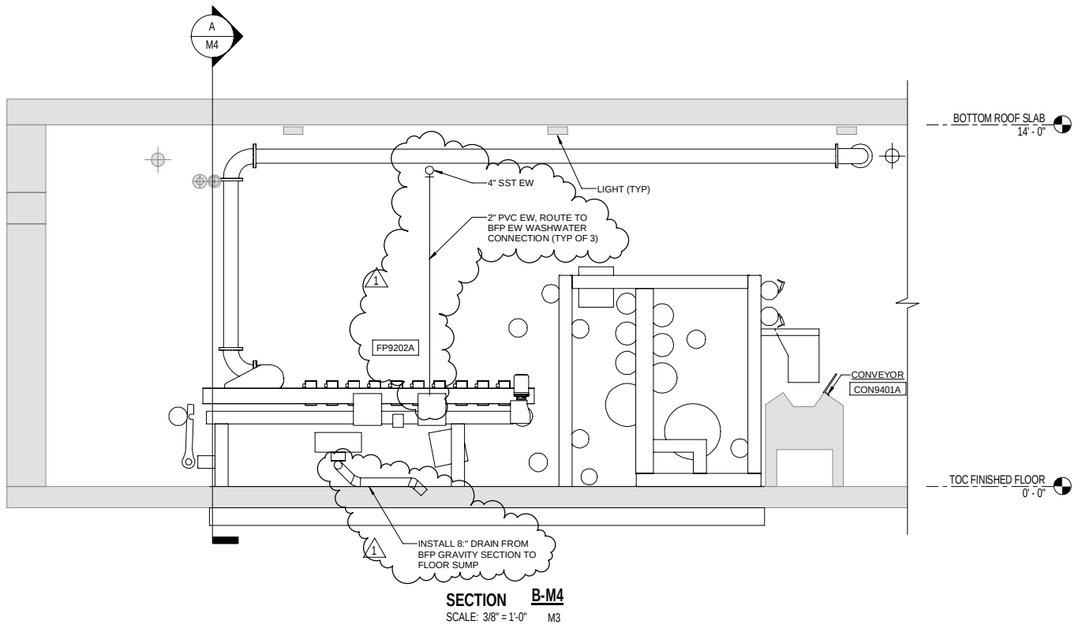

SECTION B-M4
SCALE: 3/8" = 1'-0" M3

AT FULL SIZE
0 1 2 3 IN
0 1 2 3 4 5 6 7 8 cm

NO.	DESCRIPTION	DSGN	CHKD	APVD	DATE
1	ADDENDUM 1	JB	DM	DM	10/05/2017
0	ISSUED FOR CONSTRUCTION	JB	DM	JB	08/30/2017

Stanley Consultants INC.
225 Iowa Avenue, Muscatine, Iowa 52761-3764
www.stanleyconsultants.com

CITY OF IOWA CITY WASTEWATER
BELT FILTER PRESS REPLACEMENT PROJECT
IOWA CITY, IOWA

BELT FILTER PRESS - SECTIONS

DESIGNED J.BRADY
DRAWN D.SCHMIDT
CHECKED D.MATHIAS
APPROVED J.BRADY
APPROVED
DATE AUGUST 30, 2017

SCALE: 3/8" = 1'-0"
NO. 2671001
M4
REV. 1

© STANLEY CONSULTANTS

CADD D1-R4

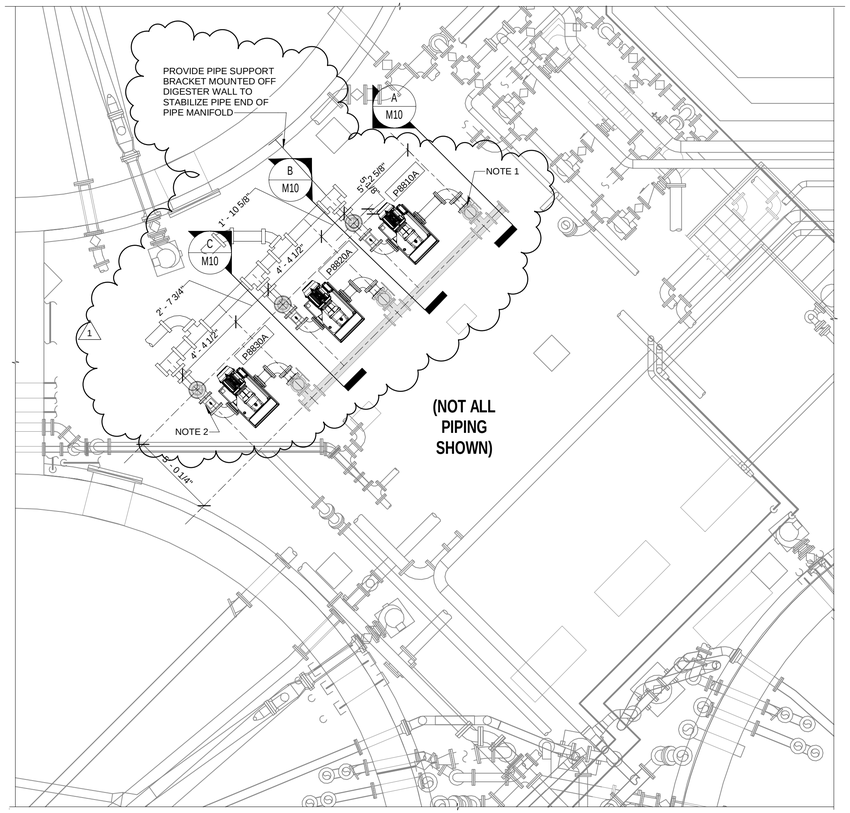

DIGESTER BUILDING 8600 BASEMENT PLAN

SCALE: 1/4" = 1'-0"

GENERAL NOTES:

1. RETAIN SALVAGED SUCTION SIDE PLUG VAVLE AND OPERATOR (TYP OF 3).
2. INSTALL SALVAGED DISCHARGE SIDE PLUG VALVE (TYP OF 3).
3. CONTRACTOR SHALL FIELD VERIFY ALL DIMENSIONS PRIOR TO EQUIPMENT MATERIAL PURCHASES. FIELD ADJUST AS NECESSARY TO INSTALL THE WORK.

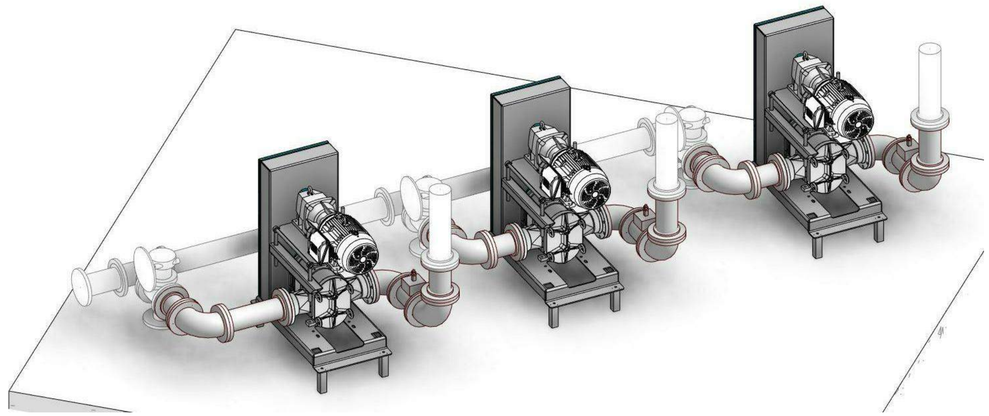

3-DIMENSIONAL VIEW OF NEW PUMPS

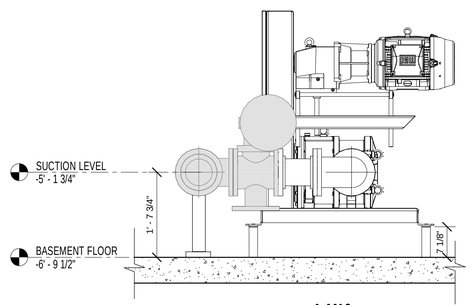

SECTION A-M10

SCALE: 3/4" = 1'-0" M10

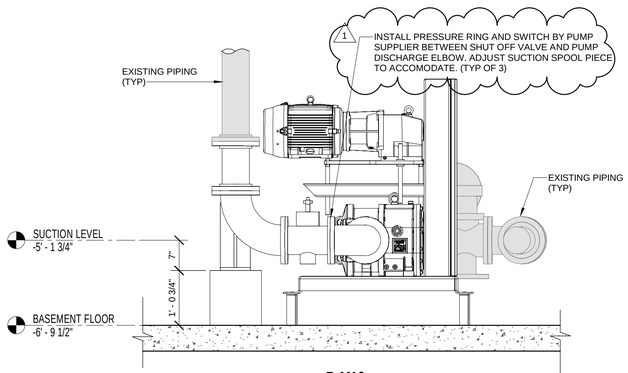

SECTION B-M10

SCALE: 3/4" = 1'-0" M10

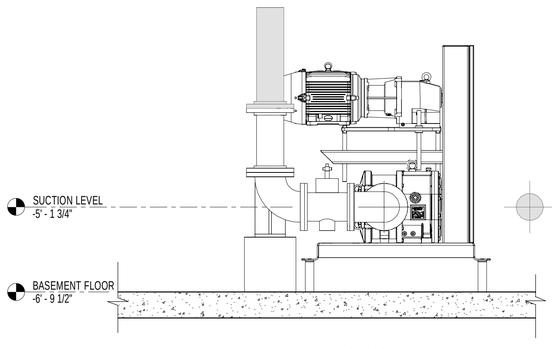

SECTION C-M10

SCALE: 3/4" = 1'-0" M10

AT FULL SIZE

0 1 2 3 IN

0 1 2 3 4 5 6 7 8 cm

NO.	DESCRIPTION	DSGN	CHKD	APVD	DATE
1	ADDENDUM 1	JB	DM	JB	10/05/2017
0	ISSUED FOR CONSTRUCTION	JB	DM	JB	08/30/2017

Stanley Consultants INC.
225 Iowa Avenue, Muscatine, Iowa 52761-3764
www.stanleyconsultants.com

CITY OF IOWA CITY WASTEWATER
BELT FILTER PRESS REPLACEMENT PROJECT
IOWA CITY, IOWA

DIGESTER BUILDING MECHANICAL PLAN AND SECTIONS

DESIGNED	J.BRADY
DRAWN	D.SCHMIDT
CHECKED	D.MATHIAS
APPROVED	J.BRADY
APPROVED	
DATE	AUGUST 30, 2017

SCALE: As indicated

NO. 2671001

M10

REV. 1

© STANLEY CONSULTANTS

C40D103-84

GENERAL NOTES:

1. REBALANCE ALL DIFFUSSERS AND GRILLS SERVED BY EXISTING AHU-9003A TO VALUES INDICATED.
2. DUCT SIZES AND LOCATIONS ARE BASED ON FIELD MEASURMENTS AND EXISTING DRAWINGS. CONTRACTOR SHALL FIELD VERIFY ALL DIMENSIONS AND LOCATIONS AND ADJUST WORK TO MATCH FIELD CONDITIONS.
3. PROVIDE NEW BALANCING DAMPERS AT EACH EXISTING TAKEOFF FOR EXISTING GRILLS AND DIFFUSSERS ASSOCIATTED WITH AHU-9003A.
4. EXISTING EXHAUST FANS F-9211A AND F-9210A SHALL BE REBALANCED TO EXHAUST 295 CFM.
5. EXISTING DUCT IS SHOWN AS SHADED GRAY.

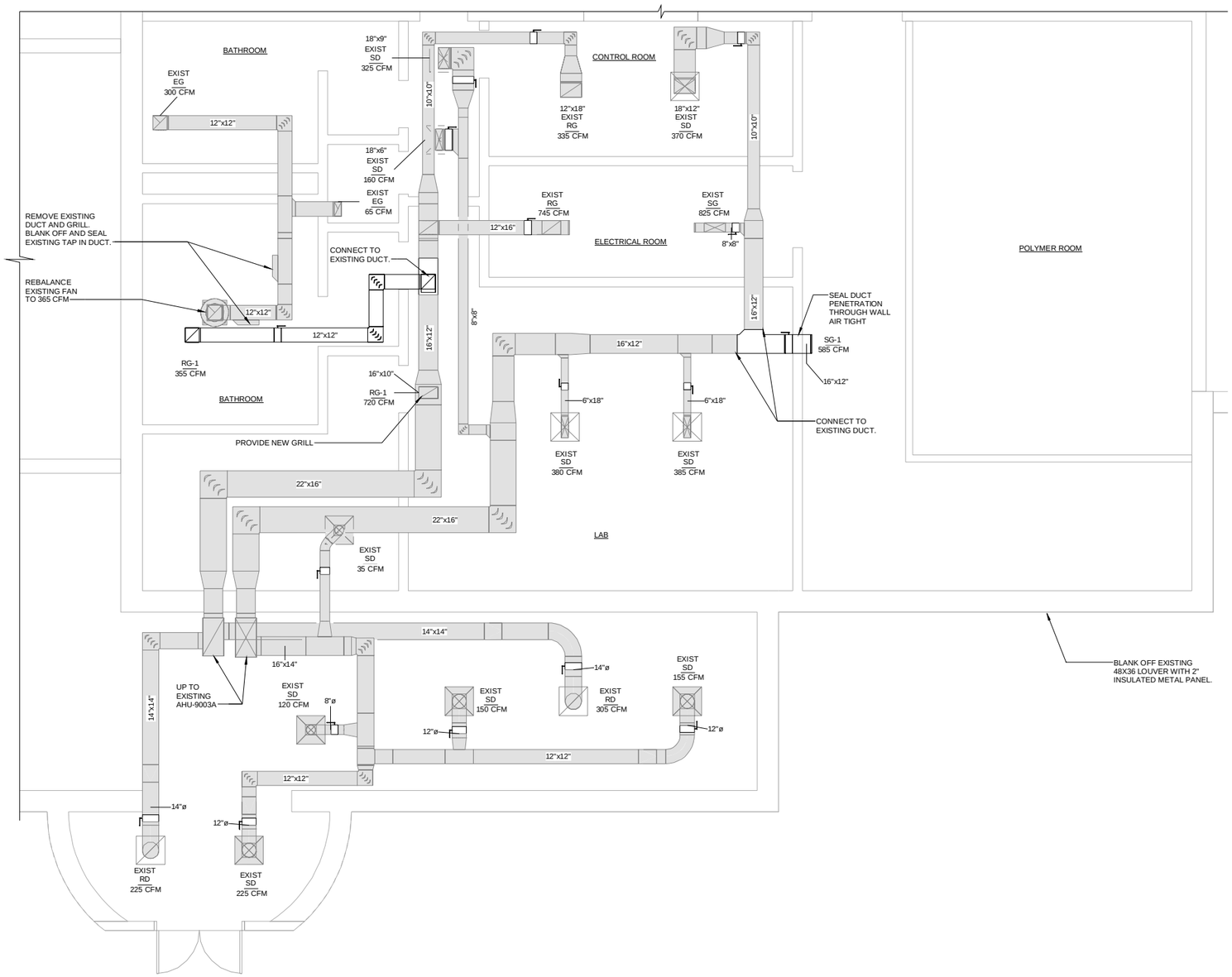

SLUDGE PROCESSING FACILITY PARTIAL HVAC PLAN

SCALE: 1/4" = 1'-0"

NO.	DESCRIPTION	DSGN	CHKD	APVD	DATE
0	ADDENDUM 1	JB	AH	JB	10/05/2017

Stanley Consultants INC.
225 Iowa Avenue, Muscatine, Iowa 52761-3764
www.stanleyconsultants.com

CITY OF IOWA CITY WASTEWATER
BELT FILTER PRESS REPLACEMENT PROJECT
IOWA CITY, IOWA

SLUDGE PROCESSING FACILITY
PARTIAL HVAC PLAN

DESIGNED	J.BOVENKAMP
DRAWN	D.SCHMIDT
CHECKED	A.HILTON
APPROVED	J. BOVENKAMP
APPROVED	
DATE	OCTOBER 05, 2017

SCALE: 1/4" = 1'-0"
NO. 2671001
REV. 0
M11

AT FULL SIZE
0 1 2 3 IN
0 1 2 3 4 5 6 7 8 cm

Stanley Consultants INC.

ADDENDUM NO. 2
October 9, 2017

BELT FILTER PRESS AND PUMP REPLACEMENTS
WASTEWATER TREATMENT FACILITY

CITY OF IOWA CITY
IOWA CITY, IOWA

1. DOCUMENT – NOTICE TO BIDDERS

Change proposal date to 2:30 P.M. on the 10th day of October 2017.

Due to City bidding restrictions bid has to occur on the original date and time.

END OF ADDENDUM NO. 2

1) J. M. Brady

Stanley Consultants INC.

ADDENDUM NO. 3
October 9, 2017

BELT FILTER PRESS AND PUMP REPLACEMENTS
WASTEWATER TREATMENT FACILITY

CITY OF IOWA CITY
IOWA CITY, IOWA

1. DOCUMENT – NOTICE TO BIDDERS

Add following to Notice to Bidders:

Owner is exempt from Iowa state sales and use taxes on materials and equipment to be incorporated in the Work. Said taxes shall not be included in the Bid. Owner will issue sale tax exemption form to successful bidder.

Complete information on qualifying materials and supplies can be found at www.state.ia.us/tax, the Iowa Department of Revenue and Finance (IDRF) web site. Links can be found in the Business Taxes and Local Government categories. Bids submitted for this Project should be submitted on this basis.

2. SECTION 26 29 23 – LOW-VOLTAGE VARIABLE FREQUENCY DRIVES

Article "2.03 – PROGRESSING CAVITY PUMP"

Change subparagraph D., 7. to read:

7. Maximum Motor horsepower: 5.

3. SECTION 26 29 23 – LOW-VOLTAGE VARIABLE FREQUENCY DRIVES

Data Sheet – Change Maximum Ambient Temperature to 100°F.

Harmonic mitigation not required for VFDs 5 hp and less.

4. DRAWING

Revise the following Drawing as indicated. This Drawing is not being reissued at this time.

Drawing E3

Change General Note 4 to read:

"4. Polymer Pump VFD's shall be replaced. Provide 5 hp Allen Bradley Powerflex VFDs. Coordinate with owner for VFD model and options."

END OF ADDENDUM NO. 3

1) J. M. Brady

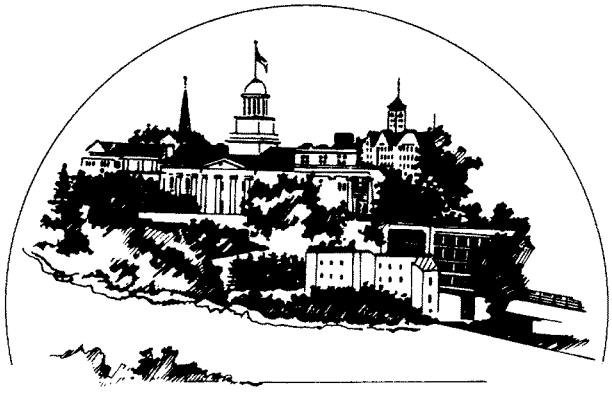

CITY OF IOWA CITY

DEPARTMENT OF PUBLIC WORKS
ENGINEERING DIVISION

PLANS, SPECIFICATIONS, PROPOSAL AND CONTRACT FOR THE CITY OF IOWA CITY BELT FILTER PRESS REPLACEMENT PROJECT IOWA CITY, IOWA

AUGUST 30th, 2017

SPECIFICATIONS
TABLE OF CONTENTS

Page Number

TITLE SHEET

TABLE OF CONTENTS

NOTICE TO BIDDERS AF-1

NOTE TO BIDDERS NB-1

FORM OF PROPOSAL FP-1

BID BOND BB-1

FORM OF AGREEMENT AG-1

PERFORMANCE AND PAYMENT BOND PB-1

CONTRACT COMPLIANCE
(ANTI-DISCRIMINATION REQUIREMENTS) CC-1

WAGE THEFT POLICY WT-1

BIDDER STATUS FORM BF-1

GENERAL CONDITIONS GC-1

SUPPLEMENTARY CONDITIONS SC-1

ATTACHMENT: OWNERS SAFETY PROGRAM

ATTACHMENT: TECHNICAL SPECIFICATIONS

ATTACHMENT: DRAWINGS

NOTICE TO BIDDERS
CITYOF IOWA CITY BELT FILTER PRESS REPLACEMENT PROJECT

Sealed proposals will be received by the City Clerk of the City of Iowa City, Iowa, until 2:30 P.M. on the 10th day of October, 2017. Sealed proposals will be opened immediately thereafter. Bids submitted by fax machine shall not be deemed a "sealed bid" for purposes of this Project. Proposals received after this deadline will be returned to the bidder unopened. Proposals will be acted upon by the City Council at a meeting to be held in the Emma J. Harvat Hall at 7:00 P.M. on the 17th day of October, 2017, or at special meeting called for that purpose.

A prebid conference will be held at 10:00 a.m. on September 28, 2017 at the Wastewater Treatment Plant, 4366 Napoleon Street SE, Iowa City, Iowa. Representatives of Owner and Engineer will be present to discuss the Project. Bidders' tour of the treatment plant facilities being modified will immediately follow conclusion of pre-bid meeting (approximately 11:00 a.m).

The Project will involve the following: General construction at the City of Iowa Wastewater Treatment Plant, 4366 Napoleon Street SE, Iowa City, IA. Work will include demolition of three existing belt filter presses, procurement and installation of three new belt filter presses with associated modifications of floor slab, mechanical piping and electrical systems, conversion of two window sets to coil doors, replacement of three belt filter press feed pumps and associated piping, replacement of four polymer pumps; replacement of HVAC exhaust fans; and control system modifications and integration.

All work is to be done in strict compliance with the plans and specifications prepared by Stanley Consultants, Inc, of Muscatine, Iowa, which have heretofore been approved by the City Council, and are on file for public examination in the Office of the City Clerk.

Each proposal shall be completed on a form furnished by the City and must be submitted in a **sealed envelope**. In addition, a separate sealed envelope shall be submitted containing a completed Bidder Status Form and a bid bond executed by a corporation authorized to contract as a surety in the State of Iowa, in the sum of 5% of the bid. The bid security shall be made payable to the TREASURER OF THE CITY OF IOWA CITY, IOWA, and shall be forfeited to the City of Iowa City in the event the successful bidder fails to enter into a contract within ten (10) calendar days of the City Council's award of the contract and post bond satisfactory to the City ensuring the faithful performance of the contract and maintenance of said Project, if required, pursuant to the provisions of this notice and the other contract documents. The City shall retain the bid security furnished by the successful bidder until the approved contract form has been executed, a bond has been filed by the bidder guaranteeing the performance of the contract, and the contract and bond have been approved by the City. The City shall promptly return the checks or bidder's bonds of unsuccessful bidders to the bidders as soon as the successful bidder is determined or within thirty days, whichever is sooner.

The successful bidder will be required to furnish a bond in an amount equal to one hundred percent (100%) of the contract price, said bond to be issued by a responsible surety approved by the City, and shall guarantee the prompt payment of all materials and labor, and also protect and save harmless the City from all claims and damages of any kind caused directly or indirectly by the operation of the contract, and shall also guarantee the maintenance of the improvement for a period of two (2) year(s) from and after its completion and formal acceptance by the City Council.

The following limitations shall apply to this Project:

Milestone 1 Date: January 12th, 2018
Substantial Completion Date: May 1st, 2018

Specified Completion Date: May 31, 2018
Specified Start Date: November 2, 2017
Liquidated Damages: $500 per day

The plans, specifications and proposed contract documents may be examined at the office of the City Clerk. Printed copies of said plans and specifications and form of proposal blanks may be secured at the Office of the City Engineer, City Hall, 410 E. Washington Street, Iowa City, Iowa, by bona fide bidders.

A $65 fee is required for each set of printed half-size set of plans and specifications provided to bidders or other interested persons. The fee shall be in the form of a check, made payable to the Treasurer of City of Iowa City, Iowa. The fee is refundable if returned within 14 days of award of the project by City Council in re-usable condition.

Electronic Bidding Documents consisting of portable document format (PDF) files of Project Manual and Drawings may be obtained from Ms. Mandy Hoag, Stanley Consultants, Inc. Muscatine, Iowa, telephone 563-264-6657 via Engineer's file transfer service and includes entry on planholders list.

Bidding Documents also may be examined at regional plan rooms and their Internet-based construction information subscription services.

Prospective bidders are advised that the City of Iowa City desires to employ minority contractors and subcontractors on City projects. A listing of minority contractors can be obtained from the Iowa Department of Inspections and Appeals at (515) 281-5796 and the Iowa Department of Transportation Contracts Office at (515) 239-1422.

The Contractor awarded the contract shall submit a list on the Form of Agreement of the proposed subcontractors, together with quantities, unit prices and extended dollar amounts.

By virtue of statutory authority, preference must be given to products and provisions grown and coal produced within the State of Iowa, and to Iowa domestic labor, to the extent lawfully required under Iowa Statutes. The Iowa reciprocal resident bidder preference law applies to this Project.

The City reserves the right to reject any or all proposals, and also reserves the right to waive technicalities and irregularities.

Posted upon order of the City Council of Iowa City, Iowa.

KELLIE FRUEHLING, CITY CLERK

NOTE TO BIDDERS

1. The successful bidder and all subcontractors are required to submit at least 4 days prior to award three references involving similar projects, including at least one municipal reference. Award of the bid or use of specific subcontractors may be denied if sufficient favorable references are not verified or may be denied based on past experience on projects with the City of Iowa City.

2. References shall be addressed to the City Engineer and include the name, address and phone number of the contact person, for City verification.

3. Bid submittals are:
   Envelope 1: Bid Bond and Bidder Status Form
   Envelope 2: Form of Proposal

FORM OF PROPOSAL
CITY OF IOWA CITY BELT FILTER PRESS REPLACEMENT PROJECT
CITY OF IOWA CITY

NOTICE TO BIDDERS:

PLEASE DO NOT USE THE FORM OF PROPOSAL INCLUDED IN THE BOUND VOLUME OF THE SPECIFICATIONS. SEPARATE COPIES OF THIS FORM ARE CONTAINED WITHIN THE BACK COVER OF THIS DOCUMENT.

Name of Bidder _____

Address of Bidder _____

TO: City Clerk
City of Iowa City
City Hall
410 E. Washington St.
Iowa City, IA 52240

The undersigned bidder submits herewith bid security in the amount of $_____, in accordance with the terms set forth in the "Project Specifications."

The undersigned bidder, having examined and determined the scope of the Contract Documents, hereby proposes to provide the required labor, services, materials and equipment and to perform the Project as described in the Contract Documents, including Addenda _____, _____, and _____, and to do all work at the prices set forth herein.

We further propose to do all "Extra Work" which may be required to complete the work contemplated, at unit prices or lump sums to be agreed upon in writing prior to starting such work.

Lump Sum Bid Price:

_____
(words)

_____ ($_____).
(figures)

Cash and contingency allowances specified in Section 01 20 00 are included in the price(s) set forth above and have been computed in accordance with the General Conditions.

Alternate No. 1 – Driveway Paving (Add):

_____
(words)

_____ ($_____).
(figures)

Alternate No. 2 – Window Storefront (Add):

_____
(words)

_____ ($_____).
(figures)

Alternate No. 3 – Stainless Steel Coil Doors (Add):

_____
(words)

_____ ($_____).
(figures)

The basis of contract award, if awarded, will be the lowest responsive, responsible bidder of the base bid plus any or all add alternates that are determined to be in the best interest of the Owner. The Owner reserves the right to reject any and all bids.

The names of those persons, firms, companies or other parties with whom we intend to enter into a subcontract, together with the type of subcontracted work and approximate dollar amount of the subcontract, are as follows:

Name: Type of Work: Appx $ Amnt:

_____

_____

_____

NOTE: All subcontractors are subject to approval by City.

The undersigned bidder certifies that this proposal is made in good faith, and without collusion or connection with any other person or persons bidding on the work.

The undersigned bidder states that this proposal is made in conformity with the "Contract Documents" and agrees that, in the event of any discrepancies or differences between any conditions of this proposal and the "Contract Documents" prepared by the City of Iowa City, the more specific shall prevail.

Firm: _____

Signature: _____

Printed Name: _____

Title: _____

Address: _____

_____

Phone: _____

Contact: _____

BID BOND

_____, as Principal, and _____, as Surety declare that we are held and are firmly bound unto the City of Iowa City, Iowa, hereinafter called "OWNER," in the sum of _____ _____ Dollars ($_____) to pay said sum as herein provided. We as Principal and Surety further promise and declare that these obligations shall bind our heirs, executors, administrators, and successors jointly and severally. This obligation is conditioned on the Principal submission of the accompanying bid, dated _____ for _____ Project.

NOW, THEREFORE,

(a) If said Bid shall be rejected, or in the alternate,

(b) If said Bid shall be accepted and the Principal shall execute and deliver a contract in the form specified, and the Principal shall then furnish a bond for the Principal's faithful performance of said Project, and for the payment of all persons performing labor or furnishing materials in connection therewith, and shall in all other respects perform the Project, as agreed to by the City's acceptance of said Bid,

then this obligation shall be void. Otherwise this obligation shall remain in full force and effect, provided that the liability of the Surety for any and all claims hereunder shall, in no event, exceed the amount of the obligation stated herein.

By virtue of statutory authority, the full amount of this bid bond shall be forfeited to the Owner in the event that the Principal fails to execute the contract and provide the bond, as provided in the Project specifications or as required by law.

The Surety, for value received, hereby stipulates and agrees that the obligations of said Surety and its bond shall in no way be impaired or affected by any extension of the time within which the Owner may accept such Bid or may execute such contract documents, and said Surety does hereby waive notice of any such time extension.

The Principal and the Surety hereto execute this bid bond this _____ day of _____, A.D., 20___.

_____ _____ (Seal)
Witness Principal
By _____ (Title)

_____ (Seal)
Surety
_____ By _____
Witness (Attorney-in-fact)
Attach Power-of-Attorney

FORM OF AGREEMENT

THIS AGREEMENT is made and entered into by and between the City of Iowa City, Iowa ("City"), and _____ ("Contractor").

WHEREAS the City has prepared certain Plans, Specifications, Proposal and Contract dated the 30th day of August, 2017, for the City of Iowa City Belt Filter Press Replacement Project ("Project"), and

WHEREAS, Contractor submitted a bid on the Project described in said Plans, Specifications, Proposal and Contract; and

WHEREAS, the parties hereto now wish to enter into this agreement for the construction of said Project.

NOW, THEREFORE, IT IS AGREED:

1. The Contractor hereby agrees to perform the Project for the sums listed in its Form of Proposal including the total extended amount of $_____, which sums are incorporated herein by this reference.

2. Contract Times:

   a. The Work will be substantially completed on or before May 1, 2018, and completed and ready for final payment in accordance with paragraph 15.06 of the General Conditions on or before May 31, 2018.

   b. Milestones. Parts of the Work shall be substantially completed on or before the following Milestone(s):

      Milestone 1: Installation and start-up of 1st belt filter press completed on or before January 12, 2018.

   c. Liquidated Damages. Contractor and Owner recognize that time is of the essence and that Owner will suffer financial and other losses if the Work is not completed and Milestones not achieved within the times specified above, plus any extensions thereof allowed in accordance with the Contract. The parties also recognize the delays, expense, and difficulties involved in proving in a legal or arbitration proceeding the actual loss suffered by Owner if the Work is not completed on time. Accordingly, instead of requiring any such proof, Owner and Contractor agree that as liquidated damages for delay (but not as a penalty):

      Substantial Completion: Contractor shall pay Owner $500 for each day that expires after the time (as duly adjusted pursuant to the Contract) specified above for Substantial Completion until the Work is substantially complete.

Completion of Remaining Work: After Substantial Completion, if Contractor shall neglect, refuse, or fail to complete the remaining Work within the Contract Time (as duly adjusted pursuant to the Contract) for completion and readiness for final payment, Contractor shall pay Owner $500 for each day that expires after such time until the Work is completed and ready for final payment.

Liquidated damages for failing to timely attain Substantial Completion and final completion are not additive and will not be imposed concurrently.

Milestones: Contractor shall pay Owner $500 for each day that expires after the duration (as duly adjusted pursuant to the Contract) specified above for achievement of each Milestones, until each Milestone is achieved.

3. This Agreement consists of the following additional component parts which are incorporated herein by reference:

a. Addenda Numbers _____;

b. Plans;

d. Technical Specifications and Supplementary Conditions;

e. Performance and Payment Bond;

f. Contractor's Completed Bidder Status Form; attached hereto;

g. Contractor's Completed Assurance of Contract Compliance Program (Anti-Discrimination Requirements), attached hereto;

h. Completed Form of Proposal; and

i. This Instrument.

The above components are deemed complementary and should be read together. In the event of a discrepancy or inconsistency, the more specific provision shall prevail.

3. The names of subcontractors acknowledged by City, together with quantities, unit prices, and extended dollar amounts, are as follows (or shown on an attachment):

Name:	Quantity:	Unit Price:	$ Amnt:

DATED this _____ day of _____, 20____.

City

By _____
Mayor

ATTEST:

_____
City Clerk

Contractor

By _____

(Title) _____

ATTEST: _____

(Title) _____
(Company Official)

Approved By:

_____
City Attorney's Office

PERFORMANCE AND PAYMENT BOND

_____, as
(insert the name and address or legal title of the Contractor)

Principal, hereinafter called the Contractor and _____
(insert the legal title of the Surety)

_____, as Surety, hereinafter called the Surety, are held and firmly bound unto the City of Iowa City, Iowa, as obligee, hereinafter called the Owner, in the amount of _____Dollars ($_____) for the payment for which Contractor and Surety hereby bind themselves, their heirs, executors, administrators, successors and assigns, jointly and severally.

WHEREAS, Contractor has, as of _____, entered into a
(date)

written Agreement with Owner for Wastewater Belt Filter Press Replacement Project; and

WHEREAS, the Agreement requires execution of this Performance and Payment Bond, to be completed by Contractor, in accordance with plans and specifications prepared by Stanley Consultants, Inc., which Agreement is by reference made a part hereof, and the agreed-upon work is hereafter referred to as the Project.

NOW, THEREFORE, THE CONDITIONS OF THIS OBLIGATION are such that, if Contractor shall promptly and faithfully perform said Agreement, then the obligation of this bond shall be null and void; otherwise it shall remain in full force and effect until satisfactory completion of the Project.

A. The Surety hereby waives notice of any alteration or extension of time made by the Owner.

B. Whenever Contractor shall be, and is declared by Owner to be, in default under the Agreement, the Owner having performed Owner's obligations thereunder, the Surety may promptly remedy the default, or shall promptly:

1. Complete the Project in accordance with the terms and conditions of the Agreement, or

2. Obtain a bid or bids for submission to Owner for completing the Project in accordance with the terms and conditions of the Agreement; and upon determination by Owner and Surety of the lowest responsible bidder, arrange for a contract between such bidder and Owner, and make available, as work progresses (even though there may be a default or a succession of defaults under the Agreement or subsequent contracts of completion arranged under this paragraph), sufficient funds to pay the cost of completion, less the balance of the Contract Price, but not

exceeding the amount set forth in the first paragraph hereof. The term "balance of the Contract Price," as used in this paragraph, shall mean the total amount payable by Owner to Contractor under the Agreement, together with any addenda and/or amendments thereto, less the amount properly paid by Owner to Contractor.

C. The Contractor and Contractor's Surety shall be obligated to keep the improvements covered by this bond in good repair for a period of Two (2) years from the date of formal acceptance of the improvements by the Owner.

D. No right of action shall accrue to or for the use of any person, corporation or third party other than the Owner named herein or the heirs, executors, administrators or successors of Owner.

IT IS A FURTHER CONDITION OF THIS OBLIGATION that the Principal and Surety, in accordance with provisions of Chapter 573, Code of Iowa, shall pay to all persons, firms or corporations having contracts directly with the Principal, including any of Principal's subcontractors, all claims due them for labor performed or materials furnished in the performance of the Agreement for whose benefit this bond is given. The provisions of Chapter 573, Code of Iowa, are a part of this bond to the same extent as if it were expressly set out herein.

SIGNED AND SEALED THIS _____ DAY OF _____, 20____.

IN THE PRESENCE OF:

_____
(Principal)

_____ _____
Witness (Title)

_____
(Surety)

_____ _____
Witness (Title)

_____
(Street)

_____
(City, State, Zip)

_____
(Phone)

Contract
Compliance Program

SECTION I - GENERAL POLICY STATEMENT

It is the policy of the City of Iowa City to require equal employment opportunity in all City contract work. This policy prohibits discrimination by the City's contractors, consultants and vendors and requires them to ensure that applicants seeking employment with them and their employees are treated equally without regard to race, color, creed, religion, national origin, sex, gender identity, sexual orientation, disability, marital status, and age.

It is the City's intention to assist employers, who are City contractors, vendors or consultants, in designing and implementing equal employment opportunity so that all citizens will be afforded equal accessibility and opportunity to gain and maintain employment.

PROVISIONS:

1. All contractors, vendors, and consultants requesting to do business with the City must submit an Equal Opportunity Policy Statement before the execution of the contract.

2. All City contractors, vendors, and consultants with contracts of $25,000 or more (or less if required by another governmental agency) must abide by the requirements of the City's Contract Compliance Program. Emergency contracts may be exempt from this provision at the discretion of the City. Regardless of the value of the contract, all contractors, vendors, and consultants are subject to the City's Human Rights Ordinance, which is codified at Article 2 of the City Code.

3. Contracting departments are responsible for assuring that City contractors, vendors, and consultants are made aware of the City's Contract Compliance Program reporting responsibilities and receive the appropriate reporting forms. A notification of requirements will be included in any request for proposal and notice of bids.

4. Prior to execution of the contract, the completed and signed Assurance of Compliance (located on pages CC-2 and CC-3) or other required material must be received and approved by the City.

5. Contracting departments are responsible for answering questions about contractor, consultant and vendor compliance during the course of the contract with the City.

6. All contractors, vendors, and consultants must refrain from the use of any signs or designations which are sexist in nature, such as those which state "Men Working" or "Flagman Ahead," and instead use gender neutral signs.

7. All contractors, vendors, and consultants must assure that their subcontractors abide by the City's Human Rights Ordinance. The City's protected classes are listed at Iowa City City Code section 2-3-1.

SECTION II - ASSURANCE OF COMPLIANCE

The following sets forth the minimum requirements of a satisfactory Equal Employment Opportunity Program which will be reviewed for acceptability. **PLEASE RETURN PAGES 2 THROUGH 3 OF THIS SECTION TO THE CONTRACTING DEPARTMENT PRIOR TO THE EXECUTION OF THE CONTRACT.**

With respect to the performance of this contract, the contractor, consultant or vendor agrees as follows: (For the purposes of these minimum requirements, "contractor" shall include consultants and vendors.)

1. The contractor will not discriminate against any employee or applicant for employment and will take affirmative efforts to ensure applicants and employees are treated during employment without regard to their race, color, creed, religion, national origin, sex, sexual orientation, gender identity, disability, marital status, and age. Such efforts shall include, but not be limited to the following: employment, promotion, demotion, or transfer; recruitment or recruitment advertising; layoff or termination; rates of pay or other forms of compensation; and selection for training, including apprenticeship.

2. The contractor will, in all solicitations or advertisements for employees placed by or on behalf of the contractor, state that it is an equal opportunity employer.

Note: Contracts that are federally funded are subject to Executive Order No. 11246, as amended, and the regulations (see generally 29 U.S.C. § 1608 et seq.) and relevant orders of the U.S. Secretary of Labor. The Secretary of Labor, and not the City, enforces said regulations and orders.

3. **Provide a copy of your written Equal Employment Opportunity policy statement.**

   Where is this statement posted?

   _____

   _____

4. What is the name, telephone number and address of your business' Equal Employment Opportunity Officer?

   (Please print) _____

   _____ _____

   Phone number Address

5. The undersigned agrees to display, in conspicuous places at the work site, all posters required by federal and state law for the duration of the contract. NOTE: The City can provide assistance in obtaining the necessary posters.

6. How does your business currently inform applicants, employees, and recruitment sources (including unions) that you are an Equal Employment Opportunity employer?

_____

_____

_____

The above responses to questions 1 through 6, are true and correctly reflect our Equal Employment Opportunity policies.

_____	_____
Business Name	Phone Number
_____	_____
Signature	Title
_____	_____
Print Name	Date

SECTION III - SUGGESTED STEPS TO ASSURE EQUAL EMPLOYMENT OPPORTUNITIES

1. COMPANY POLICY

Determine your company's policy regarding equal employment opportunities. Document the policy and post it in a conspicuous place so that it is known to all your employees. Furthermore, disseminate the policy to all potential sources of employees and to your subcontractors asking their cooperation. The policy statement should recognize and accept your responsibility to provide equal employment opportunity in all your employment practices. In regard to dissemination of this policy, this can be done, for example, through the use of letters to all recruitment sources and subcontractors, personal contacts, employee meetings, web page postings, employee handbooks, and advertising.

2. EQUAL EMPLOYMENT OPPORTUNITY OFFICER

Designate an equal employment opportunity officer or, at minimum, assign someone the responsibility of administering and promoting your company's Equal Employment Opportunity program. This person should have a position in your organization which emphasizes the importance of the program.

3. INSTRUCT STAFF

Your staff should be aware of and be required to abide by your Equal Employment Opportunity program. All employees authorized to hire, supervise, promote, or discharge employees or are involved in such actions should be trained and required to comply with your policy and the current equal employment opportunity laws.

4. RECRUITMENT

(a) Let potential employees know you are an equal opportunity employer. This can be done by identifying yourself on all recruitment advertising as "an equal opportunity employer".
(b) Use recruitment sources that are likely to yield diverse applicant pools. Word-of-mouth recruitment will only perpetuate the current composition of your workforce. Send recruitment sources a letter annually which reaffirms your commitment to equal employment opportunity and requests their assistance in helping you reach diverse applicant pools.
(c) Analyze and review your company's recruitment procedures to identify and eliminate discriminatory barriers.
(d) Select and train persons involved in the employment process to use objective standards and to support equal employment opportunity goals.
(e) Review periodically job descriptions to make sure they accurately reflect major job functions. Review education and experience requirements to make sure they accurately reflect the requirements for successful job performance.
(f) Review the job application to insure that only job related questions are asked. Ask yourself "Is this information necessary to judge an applicant's ability to perform the job applied for?" Only use job-related tests which do not adversely affect any particular group of people.
(g) Monitor interviews carefully. Prepare interview questions in advance to assure that they are only job related. Train your interviewers on discrimination laws. Biased and subjective judgments in personal interviews can be a major source of discrimination.
(h) Improve hiring and selection procedures and use non-biased promotion, transfer and training policies to increase and/or improve the diversity of your workforce representation. Companies must make sure procedures for selecting candidates for promotion, transfer and training are based upon a fair assessment of an employee's ability and work record. Furthermore, all companies should post and otherwise publicize all job promotional opportunities and encourage all qualified employees to bid on them.

Attached for your information is a copy of Section 2 – 3 – 1 of the Iowa City Code of Ordinances which prohibits certain discriminatory practices in employment. Please note that the protected characteristics include some not mandated for protection by Federal or State law. As a contractor, consultant or vendor doing business with the City of Iowa City you are required to abide by the provisions of the local ordinance in conjunction with your performance under a contract with the City.

2-3-1: EMPLOYMENT; EXCEPTIONS:

A. It shall be unlawful for any employer to refuse to hire, accept, register, classify, promote or refer for employment, or to otherwise discriminate in employment against any other person or to discharge any employee because of age, color, creed, disability, gender identity, marital status, national origin, race, religion, sex or sexual orientation. (Ord. 03-4105, 12-16-2003)

B. It shall be unlawful for any labor organization to refuse to admit to membership, apprenticeship or training an applicant, to expel any member, or to otherwise discriminate against any applicant for membership, apprenticeship or training or any member in the privileges, rights or benefits of such membership, apprenticeship or training because of age, color, creed, disability, gender identity, marital status, national origin, race, religion, sex or sexual orientation of such applicant or member.

C. It shall be unlawful for any employer, employment agency, labor organization or the employees or members thereof to directly or indirectly advertise or in any other manner indicate or publicize that individuals are unwelcome, objectionable or not solicited for employment or membership because of age, color, creed, disability, gender identity, marital status, national origin, race, religion, sex or sexual orientation. (Ord. 95-3697, 11-7-1995)

D. Employment policies relating to pregnancy and childbirth shall be governed by the following:

1. A written or unwritten employment policy or practice which excludes from employment applicants or employees because of the employee's pregnancy is a prima facie violation of this title.

2. Disabilities caused or contributed to by the employee's pregnancy, miscarriage, childbirth and recovery therefrom are, for all job related purposes, temporary disabilities and shall be treated as such under any health or temporary disability insurance or sick leave plan available in connection with employment or any written or unwritten employment policies and practices involving terms and conditions of employment as applied to other temporary disabilities.

E. It shall be unlawful for any person to solicit or require as a condition of employment of any employee or prospective employee a test for the presence of the antibody to the human immunodeficiency virus. An agreement between an employer, employment agency, labor organization or their employees, agents or members and an employee or prospective employee concerning employment, pay or benefits to an employee or prospective employee in return for taking a test for the presence of the antibody to the human immunodeficiency virus, is prohibited. The prohibitions of this subsection do not apply if the state epidemiologist determines and the director of public health declares through the utilization of guidelines established by the center for disease control of the United States department of health and human services, that a person with a condition related to acquired immune deficiency syndrome poses a significant risk of transmission of the human immunodeficiency virus to other persons in a specific occupation.

F. The following are exempted from the provisions of this section:

1. Any bona fide religious institution or its educational facility, association, corporation or society with respect to any qualifications for employment based on religion when such qualifications are related to a bona fide religious purpose. A religious qualification for instructional personnel or an administrative officer, serving in a supervisory capacity of a bona fide religious educational facility or religious institution shall be presumed to be a bona fide occupational qualification. (Ord. 94-3647, 11-8-1994)

2. An employer or employment agency which chooses to offer employment or advertise for employment to only the disabled or elderly. Any such employment or offer of employment shall not discriminate among the disabled or elderly on the basis of age, color, creed, disability, gender identity, marital status, national origin, race, religion, sex or sexual orientation. (Ord. 95-3697, 11-7-1995)

3. The employment of individuals for work within the home of the employer if the employer or members of the family reside therein during such employment.

4. The employment of individuals to render personal service to the person of the employer or members of the employer's family. (Ord. 94-3647, 11-8-1994)

5. The employment on the basis of sex in those certain instances where sex is a bona fide occupational qualification reasonably necessary to the normal operation of a particular business or enterprise. The bona fide occupational qualification shall be interpreted narrowly. (Ord. 03-4105, 12-16-2003)

6. A state or federal program designed to benefit a specific age classification which serves a bona fide public purpose. (Ord. 94-3647, 11-8-1994)

7. The employment on the basis of disability in those certain instances where presence of disability is a bona fide occupational qualification reasonably necessary to the normal operation of a particular business or enterprise. The bona fide occupational qualification shall be interpreted narrowly. (Ord. 03-4105, 12-16-2003)

8. Any employer who regularly employs less than four (4) individuals. For purposes of this section, individuals who are members of the employer's family shall not be counted as employees. (Ord. 08-4312, 8-11-2008)

SAMPLE: EQUAL EMPLOYMENT OPPORTUNITY POLICY

To all employees of _____

This Company and its employees shall not discriminate against any employee or applicant for employment based on his or her age, color, creed, disability, national origin, gender identity, marital status, race, religion, sex, or sexual orientation. The anti-discrimination policy extends to decisions involving hiring, promotion, demotion, or transfer; recruitment or recruitment advertising; layoff or termination; rates of pay or other forms of compensation; and selection for training, including apprenticeship. Further, this Company and its employees will provide a working environment free from such discrimination.

All employees are encouraged to refer minority and women applicants and applicants with disabilities for employment.

The Equal Employment Opportunity Officer for the _____ is:

Name: _____

Address: _____

_____

Telephone Number: _____

NOTE: This is a **SAMPLE ONLY.** You may wish to confer with your EEO officer or legal counsel to formulate a policy which specifically meets the needs of your company.

CITY OF IOWA CITY
WAGE THEFT POLICY

It is the policy of the City of Iowa City, as expressed by City Council Resolution No. 15-364 adopted on November 10, 2015, not to enter into certain contracts with, or provide discretionary economic development assistance to, any person or entity (including an owner of more than 25% of the entity) who has admitted guilt or liability or been adjudicated guilty or liable in any judicial or administrative proceeding of committing a repeated or willful violation of the Iowa Wage Payment Collection law, the Iowa Minimum Wage Act, the Federal Fair Labor Standards Act or any comparable state statute or local ordinance, which governs the payment of wages, for a period of five (5) years from the date of the last conviction, entry of plea, administrative finding or admission of guilt. (hereinafter "Wage Theft Policy")

I. **Application**. The Wage Theft Policy applies to the following:

a. Contracts in excess of $25,000 for goods, services or public improvements.

b. Contracts for discretionary economic development assistance. "Discretionary" economic development assistance shall mean any economic development assistance provided by the City of Iowa City that is not required by law.

II. **Exceptions.** The Wage Theft Policy does not apply to emergency purchases of goods and services, emergency construction or public improvement work, sole source contracts excepted by the City's purchasing manual, cooperative/piggyback purchasing or contracts with other governmental entities.

III. Affidavit. The contracting entity must complete the attached affidavit showing compliance with the Wage Theft Policy and provide it to the Contracting Department prior to the execution of the contract.

Contract provision: Any contract to which this policy is applicable will include the following contract provision: If the City becomes aware that a person or entity (including an owner of more than 25% of the entity) has admitted guilt or liability or been adjudicated guilty or liable in any judicial or administrative proceeding of committing a repeated or willful violation of the Iowa Wage Payment Collection law, the Iowa Minimum Wage Act, the Federal Fair Labor Standards Act or any comparable state statute or local ordinance, which governs the payment of wages, within the five (5) year period prior to the award or at any time after the award, such violation shall constitute a default under the contract.

IV. **Waivers.** If a person or entity is ineligible to contract with the City as a result of the Wage Theft Policy it may submit a request in writing indicating that one or more of the following actions have been taken:

a. There has been a bona fide change in ownership or control of the ineligible person or entity;

b. Disciplinary action has been taken against the individual(s) responsible for the acts giving rise to the violation(s);

c. Remedial action has been taken to prevent a recurrence of the acts giving rise to the disqualification or default;

or

d. Other factors that the person or entity believes are relevant.

The City Manager or Designee shall review the documentation submitted, make any inquiries deemed necessary, request additional documentation if warranted and determine whether a reduction in the ineligibility period or waiver is warranted. Should the City Manager or Designee determine that a reduction or waiver of the ineligibility period is warranted the City Manager or Designee shall make such recommendation to the City Council. The City Council will make a final decision as to whether to grant a reduction or waiver.

WAGE THEFT AFFIDAVIT

STATE OF _____)
) ss:
_____ COUNTY)

I, _____, upon being duly sworn, state as follows:

1. I am the _____ [position] of _____ ["contracting entity"] and have the authority to execute this affidavit on behalf of said contracting entity and any person or entity with an ownership interest in said contracting entity of more than 25%.

2. Neither _____ [contracting entity] nor any person or entity with an ownership interest of more than 25% of said contracting entity has been adjudicated guilty or liable in any judicial or administrative proceeding of committing a repeated or willful violation of the Iowa Wage Payment Collection law, the Iowa Minimum Wage Act, the Federal Fair Labor Standards Act or any comparable state statute or local ordinance, which governs the payment of wages in the last 5 years.

_____
Signature

This instrument was acknowledged before me by
_____ on _____, 20___.

_____

Notary Public in and for the State of _____

Bidder Status Form

To be completed by all bidders — Part A

Please answer "Yes" or "No" for each of the following:

☐ Yes ☐ No My company is authorized to transact business in Iowa.
(To help you determine if your company is authorized, please review the worksheet on the next page).

☐ Yes ☐ No My company has an office to transact business in Iowa.

☐ Yes ☐ No My company's office in Iowa is suitable for more than receiving mail, telephone calls, and e-mail.

☐ Yes ☐ No My company has been conducting business in Iowa for at least 3 years prior to the first request for bids on this project.

☐ Yes ☐ No My company is not a subsidiary of another business entity or my company is a subsidiary of another business entity that would qualify as a resident bidder in Iowa.

If you answered "Yes" for each question above, your company qualifies as a resident bidder. Please complete Parts B and D of this form.

If you answered "No" to one or more questions above, your company is a nonresident bidder. Please complete Parts C and D of this form.

To be completed by resident bidders — Part B

My company has maintained offices in Iowa during the past 3 years at the following addresses:

Dates: _____ /_____/_____to _____/ _____/ _____ Address: _____

City, State, Zip: _____

Dates: _____ /_____/_____to _____/ _____/ _____ Address: _____

City, State, Zip: _____

Dates: _____ /_____/_____to _____/ _____/ _____ Address: _____

You may attach additional sheet(s) if needed. City, State, Zip: _____

To be completed by non-resident bidders — Part C

1. Name of home state or foreign country reported to the Iowa Secretary of State:

_____

2. Does your company's home state or foreign country offer preferences to bidders who are residents? ☐ Yes ☐ No

3. If you answered "Yes" to question 2, identify each preference offered by your company's home state or foreign country and the appropriate legal citation.

_____

_____

You may attach additional sheet(s) if needed.

To be completed by all bidders — Part D

I certify that the statements made on this document are true and complete to the best of my knowledge and I know that my failure to provide accurate and truthful information may be a reason to reject my bid.

Firm Name: _____

Signature: _____ Date: _____

You must submit the completed form to the governmental body requesting bids per 875 Iowa Administrative Code Chapter 156. This form has been approved by the Iowa Labor Commissioner.

Worksheet: Authorization to Transact Business

This worksheet may be used to help complete Part A of the Resident Bidder Status form. If at least one of the following describes your business, you are authorized to transact business in Iowa.

☐ Yes ☐ No My business is currently registered as a contractor with the Iowa Division of Labor.

☐ Yes ☐ No My business is a sole proprietorship and I am an Iowa resident for Iowa income tax purposes.

☐ Yes ☐ No My business is a general partnership or joint venture. More than 50 percent of the general partners or joint venture parties are residents of Iowa for Iowa income tax purposes.

☐ Yes ☐ No My business is an active corporation with the Iowa Secretary of State and has paid all fees required by the Secretary of State, has filed its most recent biennial report, and has not filed articles of dissolution.

☐ Yes ☐ No My business is a corporation whose articles of incorporation are filed in a state other than Iowa, the corporation has received a certificate of authority from the Iowa secretary of state, has filed its most recent biennial report with the secretary of state, and has neither received a certificate of withdrawal from the secretary of state nor had its authority revoked.

☐ Yes ☐ No My business is a limited liability partnership which has filed a statement of qualification in this state and the statement has not been canceled.

☐ Yes ☐ No My business is a limited liability partnership which has filed a statement of qualification in a state other than Iowa, has filed a statement of foreign qualification in Iowa and a statement of cancellation has not been filed.

☐ Yes ☐ No My business is a limited partnership or limited liability limited partnership which has filed a certificate of limited partnership in this state, and has not filed a statement of termination.

☐ Yes ☐ No My business is a limited partnership or a limited liability limited partnership whose certificate of limited partnership is filed in a state other than Iowa, the limited partnership or limited liability limited partnership has received notification from the Iowa secretary of state that the application for certificate of authority has been approved and no notice of cancellation has been filed by the limited partnership or the limited liability limited partnership.

☐ Yes ☐ No My business is a limited liability company whose certificate of organization is filed in Iowa and has not filed a statement of termination.

☐ Yes ☐ No My business is a limited liability company whose certificate of organization is filed in a state other than Iowa, has received a certificate of authority to transact business in Iowa and the certificate has not been revoked or canceled.

ARC 1271C

LABOR SERVICES DIVISION[875]

Adopted and Filed

Pursuant to the authority of Iowa Code section 73A.21, the Labor Commissioner hereby adopts a new Chapter 156, "Bidder Preferences in Government Contracting," Iowa Administrative Code.

This amendment adopts new rules concerning preferences for resident bidders on government construction projects. The new chapter sets forth requirements for a public body involved in a public improvement and sets forth enforcement procedures.

Notice of Intended Action was published in the October 30, 2013, Iowa Administrative Bulletin as **ARC 1160C**. Public comments regarding the proposed rules were received. Commenters stated that some of the rules could be misinterpreted and that some of the rules were beyond the statutory authority of Iowa Code section 73A.21. Commenters expressed ideas on how to make the bidding process more efficient. Commenters also questioned the constitutionality of Iowa Code section 73A.21. One commenter suggested adding compliance with Iowa Code chapter 91C as a basis to find that a company is authorized to transact business in Iowa.

These rules are not identical to those published under Notice of Intended Action. Some changes are technical; other more substantive changes are described below.

References to "domicile" were removed from several rules.

Subrule 156.2(1) was changed to clarify that the requirements apply only to a project to be awarded to the lowest responsible bidder; to clarify that only office addresses, not construction worksites, must be reported; to remove a reference to perjury; and to change the deadline for submitting a statement to the public body.

Paragraph 156.2(2)"b" was changed by deleting the phrase "under this Act."

Subrule 156.2(3) was changed by adding new paragraph "k" concerning construction contractor registration, and by clarifying that compliance with only one of the lettered paragraphs in the subrule is necessary.

Paragraph 156.2(4)"b" was changed by adding the phrase "if applicable."

In rule 875—156.3(73A), the term "public body" replaced the term "nonresident bidder."

A new rule 875—156.9(73A) containing a severability clause was added.

The principal reason for adoption of this amendment is to implement legislative intent. No variance procedures are included in these rules because variance provisions are set forth in 875—Chapter 1.

After analysis and review of this rule making, no impact on jobs has been found.

These rules are intended to implement Iowa Code section 73A.21.

These rules shall become effective on February 12, 2014.

The following amendment is adopted.

Adopt the following **new** 875—Chapter 156:

CHAPTER 156
BIDDER PREFERENCES IN GOVERNMENT CONTRACTING

875—156.1(73A) Purpose, scope and definitions. These rules institute administrative and operational procedures for enforcement of the Act. The definitions and interpretations contained in Iowa Code section 73A.21 shall be applicable to such terms when used in this chapter.

"*Act*" means Iowa Code section 73A.21.

"*Affiliate,*" when used with respect to any specified person or entity, means another person or entity that, either directly or indirectly through one or more intermediaries, controls, or is controlled by, or is under common control or ownership with, such specified person or entity.

"*Commissioner*" means the labor commissioner appointed pursuant to Iowa Code section 91.2, or the labor commissioner's designee.

"*Division*" means the division of labor of the department of workforce development.

"Nonresident bidder" means a person or entity that does not meet the definition of a resident bidder, including any affiliate of any person or entity that is a nonresident bidder.

"Parent," when used with respect to any specified person or entity, means an affiliate controlling such specified person or entity directly or indirectly through one or more intermediaries.

"Public body" means the state and any of its political subdivisions, including a school district, public utility, or the state board of regents.

"Public improvement" means a building or other construction work to be paid for in whole or in part by the use of funds of the state, its agencies, and any of its political subdivisions and includes road construction, reconstruction, and maintenance projects.

"Public utility" includes municipally owned utilities and municipally owned waterworks.

"Resident bidder" means a person or entity authorized to transact business in this state and having a place of business for transacting business within the state at which it is conducting and has conducted business for at least three years prior to the date of the first advertisement for the public improvement. If another state or foreign country has a more stringent definition of a resident bidder, the more stringent definition is applicable as to bidders from that state or foreign country.

"Resident labor force preference" means a requirement in which all or a portion of a labor force working on a public improvement is a resident of a particular state or country.

"Subsidiary," when used with respect to any specified person or entity, is an affiliate controlled by such specified person or entity directly or indirectly through one or more intermediaries.

875—156.2(73A) Reporting of resident status of bidders.

156.2(1) *Reporting to public body.* When a contract for a public improvement is to be awarded to the lowest responsible bidder, the public body shall request a statement from each bidder regarding the bidder's resident status. The statement shall be on the form designated by the commissioner. The statement shall require the bidder to certify whether the bidder is a resident bidder or a nonresident bidder. In the case of a resident bidder, the statement shall require the resident bidder to identify each office at which the resident bidder has conducted business in the state during the previous three years and the dates on which the resident bidder conducted business at each office. In the case of a nonresident bidder, the statement shall require the nonresident bidder to identify the nonresident bidder's home state or foreign country as reported to the Iowa secretary of state, to identify each preference offered by the nonresident bidder's home state or foreign country, and to certify that, except as set forth on the form, there are no other preferences offered by the nonresident bidder's home state or foreign country. The statement shall include such additional information as requested by the commissioner. The statement must be signed by an authorized representative of the bidder. A fully completed statement shall be deemed to be incorporated by reference into all project bid specifications and contract documents with any bidder on a public improvement. Failure to provide the statement with the bid may result in the bid being deemed nonresponsive. This may result in the bid being rejected by the public body.

156.2(2) *Determining residency status.*

a. For purposes of the Act, a person or entity is a resident bidder if the person or entity:

(1) Is authorized to transact business in Iowa; and

(2) Has had one or more places of business in Iowa at which it is conducting or has conducted business in this state for at least three years immediately prior to the date of the first advertisement for the public improvement.

b. If the person or entity is a resident of a state or foreign country that has a more stringent definition than is set forth in paragraph 156.2(2)*"a"* for determining whether a person or entity in that state or country is a resident bidder, then the more stringent definition applies.

156.2(3) *Determining authorization to transact business.* A person or entity is authorized to transact business in the state if one or more of the following accurately describes the person or entity:

a. In the case of a sole proprietorship, the sole proprietor is an Iowa resident for Iowa income tax purposes;

b. In the case of a general partnership or joint venture, more than 50 percent of the general partners or joint venture parties are residents of Iowa for Iowa income tax purposes;

c. In the case of a limited liability partnership which has filed a statement of qualification in this state, the statement has not been canceled;

d. In the case of a limited liability partnership whose statement of qualification is filed in a state other than Iowa, the limited liability partnership has filed a statement of foreign qualification in Iowa and a statement of cancellation has not been filed pursuant to Iowa Code section 486A.105(4);

e. In the case of a limited partnership or limited liability limited partnership whose certificate of limited partnership is filed in this state, the limited partnership or limited liability limited partnership has not filed a statement of termination;

f. In the case of a limited partnership or a limited liability limited partnership whose certificate of limited partnership is filed in a state other than Iowa, the limited partnership or limited liability limited partnership has received notification from the Iowa secretary of state that the application for certificate of authority has been approved and no notice of cancellation has been filed by the limited partnership or the limited liability limited partnership;

g. In the case of a limited liability company whose certificate of organization is filed in this state, the limited liability company has not filed a statement of termination;

h. In the case of a limited liability company whose certificate of organization is filed in a state other than Iowa, the limited liability company has received a certificate of authority to transact business in this state and the certificate has not been revoked or canceled;

i. In the case of a corporation whose articles of incorporation are filed in this state, the corporation (1) has paid all fees required by Iowa Code chapter 490, (2) has filed its most recent biennial report, and (3) has not filed articles of dissolution;

j. In the case of a corporation whose articles of incorporation are filed in a state other than Iowa, the corporation (1) has received a certificate of authority from the Iowa secretary of state, (2) has filed its most recent biennial report with the secretary of state, and (3) has neither received a certificate of withdrawal from the secretary of state nor had its authority revoked; or

k. The person or entity is registered with the Iowa division of labor as a construction contractor pursuant to Iowa Code chapter 91C.

156.2(4) *Determining if bidder has conducted business in state.* In order to determine if a bidder has a place of business for transacting business within Iowa at which it is conducting and has conducted business for at least three years prior to the date of the first advertisement of the public improvement, the bidder shall meet the following criteria for the three-year period prior to the first advertisement for the public improvement:

a. Continuously maintained a place of business for transacting business in Iowa that is suitable for more than receiving mail, telephone calls, and e-mails; and

b. Conducted business in the state for each of those three years and filed an Iowa income tax return, if applicable, made payments to the Iowa unemployment insurance fund, if applicable, and maintained an Iowa workers' compensation policy, if applicable, in effect for each of those three years.

875—156.3(73A) Application of preference. When awarding a contract for a public improvement to the lowest responsible bidder, the public body shall allow a preference to a resident bidder as against a nonresident bidder that is equal to any preference given or required by the home state or foreign country in which the nonresident bidder is a resident without regard to whether such preferences are actually enforced by the applicable regulatory body in each state. If the bidder is a subsidiary of a parent that would be a nonresident bidder if such parent were to bid on the public improvement in its own name, then the public body shall allow a preference as against such bidder that is equal to the preference given or required by the home state or foreign country of the bidder's parent. In the instance of a labor force preference, a public body shall apply the same resident labor force preference to a public improvement in this state as would be required in the construction of a public improvement by the home state or foreign country of the nonresident bidder, or the parent of a resident bidder if the parent would qualify as a nonresident bidder if such parent were to bid on the public improvement in its own name.

A preference shall not be applied to a subcontractor unless the home state or foreign country of the nonresident bidder to whom the contract was awarded would apply a preference to the subcontractor.

Specific methods of calculating and applying a preference shall mirror those that apply in the home state or foreign country of the nonresident bidder to whom the contract was awarded. In the event that the specific method used by the nonresident bidder's home state or foreign country cannot be determined, the calculation for a labor force preference shall include only the labor force working on the public improvement in Iowa on a regular basis calculated by pay period.

875—156.4(73A) Complaints regarding alleged violations of the Act.

156.4(1) *Complaints.* Any person with information regarding a violation of the Act may submit a written complaint to the commissioner. Any complaint must provide the information required pursuant to subrule 156.4(2) or as much of such information as is reasonably practicable under the circumstances. The completed written complaint form shall be submitted to the commissioner at Labor Services Division, 1000 East Grand Avenue, Des Moines, Iowa 50319.

156.4(2) *Written complaint form.* The commissioner shall prepare a written complaint form that a person with information regarding a potential violation of the Act may submit pursuant to subrule 156.4(1). The written complaint form shall request the following information: the name, address, telephone number, and e-mail address of the complainant; the name of the bidder that is believed to have violated the Act; a description of any relationships between the complainant and the bidder; an identification of the public body to which the bidder submitted a bid; the home state or foreign country of the bidder; a description of the goods and services provided under the bid; and such additional information as requested by the commissioner.

156.4(3) *Availability of written complaint form.* The written complaint form shall be available in all division offices and on the department of workforce development's Internet Web site.

875—156.5(73A) Nonresident bidder record-keeping requirements. While participating in a public improvement, a nonresident bidder from a home state or foreign country with a resident labor force preference shall make and keep, for a period of not less than three years, accurate records of all workers employed by the contractor or subcontractor on the public improvement. The records shall include each worker's name, address, telephone number if available, social security number, trade classification, and starting and ending date of employment.

875—156.6(73A) Investigations; determination of civil penalty. The commissioner or an authorized designee shall cause an investigation to be made into charges of violations of the Act, including allegations set forth in a written complaint.

156.6(1) *Investigative powers.* The commissioner or the authorized designee shall have the following powers:

a. Hearings. The commissioner may hold hearings and investigate charges of violations of the Act.

b. Entry into place of employment. The commissioner may, consistent with due process of law, enter any place of employment to inspect records concerning labor force residency, to question an employer or employee, and to investigate those facts, conditions, or matters as are deemed appropriate in determining whether any person has violated the provisions of the Act. The commissioner shall only make an entry into a place of employment in response to a written complaint.

c. Residency of workers. The commissioner may investigate and ascertain the residency of a worker engaged in any public improvement in this state.

d. Oaths; depositions; subpoenas. The commissioner may administer oaths, take or cause to be taken deposition of witnesses, and require by subpoena the attendance and testimony of witnesses and the production of all books, registers, payrolls, and other evidence relevant to a matter under investigation or hearing.

e. Employment of personnel. The commissioner may employ qualified personnel as are necessary for the enforcement of Iowa Code section 73A.21. The personnel shall be employed pursuant to the merit system provisions of Iowa Code chapter 8A, subchapter IV.

f. Request for records. The commissioner shall require a contractor or subcontractor to file, within 10 days of receipt of a request, any records enumerated in rule 875—156.5(73A). If the contractor or subcontractor fails to provide the requested records within 10 days, the commissioner may direct, within 15 days after the end of the 10-day period, that the fiscal or financial office charged with the custody and disbursement of funds of the public body that contracted for construction of the public improvement or undertook the public improvement, to withhold immediately from payment to the contractor or subcontractor up to 25 percent of the amount to be paid to the contractor or subcontractor under the terms of the contract or written instrument under which the public improvement is being performed. The amount withheld shall be immediately released upon receipt by the public body of a notice from the commissioner indicating that the request for records as required by this paragraph has been satisfied.

156.6(2) *Division determination.* Upon conclusion of an investigation, the commissioner or an authorized designee shall issue a written determination to the party that was the subject of the investigation. The determination shall indicate whether or not the division finds a violation of the Act by the party. If the determination indicates that the party engaged in a violation of the Act, the determination shall also indicate the remedies the division intends to pursue as a result of the violation.

156.6(3) *Informal conference.* A party seeking review of the division's determination pursuant to this rule may file a written request for an informal conference. The request must be received by the division within 15 days after the date of issuance of the division's determination. During the conference, the party seeking review may present written or oral information and arguments as to why the division's determination should be amended or vacated. The division shall consider the information and arguments presented and issue a written decision advising all parties of the outcome of the informal conference.

875—156.7(73A) Remedies. Following the conclusion of the informal conference, or following the expiration of the time in which a party may file a written request for an informal conference, the division may pursue the following remedies.

156.7(1) *Injunctive relief.* If the division determines that a violation of the Act has occurred, the division may sue for injunctive relief against the awarding of a contract, the undertaking of a public improvement, or the continuation of a public improvement.

156.7(2) *Civil penalty.* Any person or entity that violates the provisions of this chapter is subject to a civil penalty in an amount not to exceed $1,000 for each violation found in a first investigation by the division, not to exceed $5,000 for each violation found in a second investigation by the division, and not to exceed $15,000 for a third or subsequent violation found in any subsequent investigation by the division. Each violation of this chapter for each worker and for each day the violation continues constitutes a separate and distinct violation. In determining the amount of the penalty, the division shall consider the appropriateness of the penalty to the person or entity charged, upon determination of the gravity of the violation(s). The collection of these penalties shall be enforced in a civil action brought by the attorney general on behalf of the division.

875—156.8(73A) Compliance with federal law. If it is determined that application of this chapter and the Act may cause denial of federal funds which would otherwise be available for a public improvement, or would otherwise be inconsistent with requirements of any federal law or regulation, the application of this chapter shall be suspended to the extent necessary to prevent denial of the funds or to eliminate the inconsistency with federal requirements.

875—156.9(73A) Severability. If any rule under this chapter, any portion of a rule under this chapter, or the applicability of any rule under this chapter to any person or circumstance is held invalid by court, the remainder of these rules or the rules' applicability to other persons or circumstances shall not be affected.

These rules are intended to implement Iowa Code section 73A.21.

[Filed 12/16/13, effective 2/12/14]
[Published 1/8/14]
EDITOR'S NOTE: For replacement pages for IAC, see IAC Supplement 1/8/14.

CITY OF IOWA CITY
GENERAL CONDITIONS

ARTICLE 1- DEFINITIONS AND TERMINOLOGY

1.01 *Defined Terms*

A. Wherever used in the Contract Documents the terms listed below will have the meanings indicated which are applicable to both the singular and plural thereof.

1. *Addenda*--Written or graphic instruments issued prior to the opening of Bids which clarify, correct, or change the Bidding Requirements or the Contract Documents.

2. Agreement--The written instrument which is evidence of the agreement between OWNER and CONTRACTOR covering the Work.

3. *Application for Payment*--The form acceptable to OWNER which is to be used by CONTRACTOR during the course of the Work in requesting progress or final payments and which is to be accompanied by such supporting documentation as is required by the Contract Documents.

4. *Asbestos*--Any material that contains more than one percent asbestos and is friable or is releasing asbestos fibers into the air above current action levels established by the United States Occupational Safety and Health Administration.

5. *Bid*--The offer or proposal of a bidder submitted on the prescribed form setting forth the prices for the Work to be performed.

6. *Bidding Documents*--The Bidding Requirements and the proposed Contract Documents (including all Addenda issued prior to receipt of Bids).

7. *Bidding Requirements*--The Advertisement or Invitation to Bid, Instructions to Bidders, Bid security form, if any, and the Bid form with any supplements.

8. *Bonds*--Performance and payment bonds and other instruments of security.

9. *Change Order*--A document required by OWNER which is signed by CONTRACTOR and OWNER and authorizes an addition, deletion, or revision in the Work or an adjustment in the Contract Price or the Contract Times, issued on or after the Effective Date of the Agreement.

10. *Claim*--A demand or assertion by OWNER or CONTRACTOR seeking an adjustment of Contract Price or Contract Times, or both, or other relief with respect to the terms of the Contract. A demand for money or services by a third party is not a Claim.

11. *Contract*--The entire and integrated written agreement between OWNER and CONTRACTOR concerning the Work. The Contract supersedes prior negotiations, representations, or agreements, whether written or oral.

12. *Contract Documents*--The Contract Documents establish the rights and obligations of the parties and include the Agreement, Addenda (which pertain to the Contract Documents), CONTRACTOR's Bid (including documentation accompanying the Bid and any post Bid documentation submitted prior to the Notice of Award) when attached as an exhibit to the Agreement, the Notice to Proceed, the Bonds, these General Conditions, the Supplementary Conditions, the Specifications and the Drawings as the same are more specifically identified in the Agreement, together with all Written Amendments, Change Orders, Work Change Directives, Field Orders, and OWNER's written interpretations and clarifications issued on or after the Effective Date of the Agreement. Approved Shop Drawings and the reports and drawings of subsurface and physical conditions are not Contract Documents. Only printed or hard copies of the items listed in this paragraph are Contract Documents. Files in electronic media format of text, data, graphics, and the like that may be furnished by OWNER to CONTRACTOR are not Contract Documents.

13. *Contract Price*--The moneys payable by OWNER to CONTRACTOR for completion of the Work in accordance with the Contract Documents as stated in the Agreement (subject to the provisions of paragraph 11.03 in the case of Unit Price Work).

14. *Contract Times*--The number of days or the dates stated in the Agreement to: (i) achieve milestones; (ii) achieve Substantial Completion; and (iii) complete the Work so that it is ready for final payment as evidenced by OWNER's written approval of final payment.

15. *CONTRACTOR*--The individual or entity with whom OWNER has entered into the Agreement.

16. *Cost of the Work*--The sum of all costs necessarily incurred and paid by CONTRACTOR in the proper performance of the Work.

17. *Drawings*--That part of the Contract Documents approved by OWNER which graphically shows the scope, extent, and character of the Work to be performed by CONTRACTOR. Shop Drawings and other CONTRACTOR submittals are not Drawings as so defined.

18. *Effective Date of the Agreement*--The date indicated in the Agreement on which it becomes effective, but if no such date is indicated, it means the date on which the Agreement is signed and delivered by the last of the two parties to sign and deliver.

19. *Extra Work*— Work not provided for in the Contract as awarded or deemed essential to the satisfactory completion of the Contract and authorized by OWNER.

20. *Field Order*--A written order issued by OWNER which requires minor changes in the Work but which does not involve a change in the Contract Price or the Contract Times.OWNER

21. *Final Payment*--Payment made to CONTRACTOR after all work is satisfactorily completed. Final payment does not include retainage.

22. *General Requirements*--Sections of Division 1 of the Specifications.

23. *Hazardous Environmental Condition*--The presence at the Site of Asbestos, PCBs, Petroleum, Hazardous Waste, or Radioactive Material in such quantities or circumstances that may present a substantial danger to persons or property exposed thereto in connection with the Work.

24. *Hazardous Waste*--The term Hazardous Waste shall have the meaning provided in Section 1004 of the Solid Waste Disposal Act (42 USC Section 6903), as amended from time to time.

25. *Laws and Regulations; Laws or Regulations*--Any and all applicable laws, rules, regulations, ordinances, codes, and orders of any and all governmental bodies, agencies, authorities, and courts having jurisdiction.

26. *Liens*--Charges, security interests, or encumbrances upon Project funds, real property, or personal property.

27. *Milestone*--A principal event specified in the Contract Documents relating to an intermediate completion date or time prior to Substantial Completion of all the Work.

28. *Notice of Award*--The written notice by OWNER to the apparent successful bidder stating that upon timely compliance by the apparent successful bidder with the conditions precedent listed therein, OWNER will sign and deliver the Agreement.

29. *Notice to Proceed*--A written notice given by OWNER to CONTRACTOR fixing the date on which the Contract Times will commence and on which CONTRACTOR shall start to perform the Work under the Contract Documents.

30. *OWNER*--The City of Iowa City with whom CONTRACTOR has entered into the Agreement and for whom the Work is to be performed, including its employees and professional consultants under contract providing services for the Work.

31. *OWNER's Professional Consultant*--An individual or entity having a contract with OWNER to furnish services as OWNER's independent professional consultant with respect to the Project and who is identified as such in the Supplementary Conditions.

32. *Partial Utilization*--Use by OWNER of a substantially completed part of the Work for the purpose for which it is intended (or a related purpose) prior to Substantial Completion of all the Work.

33. *PCBs*--Polychlorinated biphenyls.

34. *Petroleum*--Petroleum, including crude oil or any fraction thereof which is liquid at standard conditions of temperature and pressure (60 degrees Fahrenheit and 12.7 pounds per square inch absolute), such as oil, petroleum, fuel oil, oil sludge, oil refuse, gasoline, kerosene, and oil mixed with other non-Hazardous Waste and crude oils.

35. *Project*--The total construction of the Work to be performed under the Contract Documents, which may be the whole or a part, as may be indicated in the Contract Documents.

36. *Project Manual*--The bound documentary information prepared for bidding and constructing the Work. A listing of the contents of the Project Manual, which may be bound in one or more volumes, is contained in the table(s) of contents.

37. *Radioactive Material*--Source, special nuclear, or byproduct material as defined by the Atomic Energy Act of 1954 (42 USC Section 2011 et seq.) as amended from time to time.

38. *Resident Project Representative*--The authorized representative of OWNER who is assigned to the Site or any part thereof.

39. *Samples*--Physical examples of materials, equipment, or workmanship that are representative of some portion of the Work and which establish the standards by which such portion of the Work will be judged.

40. *Shop Drawings*--All drawings, diagrams, illustrations, schedules, and other data or information which are specifically prepared or assembled by or for CONTRACTOR and submitted by CONTRACTOR to OWNER to illustrate some portion of the Work.

41. *Site*--Lands or areas indicated in the Contract Documents as being furnished by OWNER upon which the Work is to be performed, including rights-of-way and easements for access thereto, and such other lands furnished by OWNER which are designated for the use of CONTRACTOR.

42. *Specifications*--That part of the Contract Documents consisting of written technical descriptions of materials, equipment, systems, standards, and workmanship as applied to the Work and certain administrative details applicable thereto.

43. *Subcontractor*--An individual or entity having a direct contract with CONTRACTOR or with any other Subcontractor for the performance of a part of the Work at the Site.

44. *Substantial Completion*--The time at which the Work (or a specified part thereof) has progressed to the point where, in the opinion of OWNER, the Work (or a specified part thereof) is sufficiently complete, in accordance with the Contract Documents, so that the Work (or a specified part thereof) can be utilized for the purposes for which it is intended. The terms

"substantially complete" and "substantially completed" as applied to all or part of the Work refer to Substantial Completion thereof.

45. *Supplementary Conditions*--That part of the Contract Documents which amends or supplements these General Conditions.

46. *Supplier*--A manufacturer, fabricator, supplier, distributor, materialman, or vendor having a direct contract with CONTRACTOR or with any Subcontractor to furnish materials or equipment to be incorporated in the Work by CONTRACTOR or any Subcontractor.

47. *Underground Facilities*--All underground pipelines, conduits, ducts, cables, wires, manholes, vaults, tanks, tunnels, or other such facilities or attachments, and any encasements containing such facilities, including those that convey electricity, gases, steam, liquid petroleum products, telephone or other communications, cable television, water, wastewater, storm water, other liquids or chemicals, or traffic or other control systems.

48. *Unit Price Work*--Work to be paid for on the basis of unit prices.

49. *Work*--The entire completed construction or the various separately identifiable parts thereof required to be provided under the Contract Documents. Work includes and is the result of performing or providing all labor, services, and documentation necessary to produce such construction, and furnishing, installing, and incorporating all materials and equipment into such construction, all as required by the Contract Documents.

50. *Work Change Directive*--A written statement to CONTRACTOR issued on or after the Effective Date of the Agreement and signed by OWNER and CONTRACTOR ordering an addition, deletion, or revision in the Work, or responding to differing or unforeseen subsurface or physical conditions under which the Work is to be performed or to emergencies. A Work Change Directive will not change the Contract Price or the Contract Times but is evidence that the parties expect that the change ordered or documented by a Work Change Directive will be incorporated in a subsequently issued Change Order following negotiations by the parties as to its effect, if any, on the Contract Price or Contract Times.

51. *Written Amendment*--A written statement modifying the Contract Documents, signed by OWNER and CONTRACTOR on or after the Effective Date of the Agreement and normally dealing with the non-engineering or nontechnical rather than strictly construction-related aspects of the Contract Documents.

1.02 *Terminology*

A. *Intent of Certain Terms or Adjectives*

1. Whenever in the Contract Documents the terms "as allowed;" "as approved," or terms of like effect or import are used, or the adjectives "reasonable," "suitable," "acceptable, "proper, " "satisfactory, " or adjectives of like effect or import are used to describe an action or determination of OWNER as to the Work, it is intended that such action or determination will be solely to evaluate, in general, the completed Work for compliance with the requirements of and information in the Contract Documents and conformance with the design concept of the completed Project as a functioning whole as shown or indicated in the Contract Documents (unless there is a specific statement indicating otherwise). The use of any such term or adjective shall not be effective to assign to OWNER any duty or authority to supervise or direct the performance of the Work or any duty or authority to undertake responsibility contrary to any provisions of the Contract Documents.

B. *Day*

1. The word "day" shall constitute a calendar day of 24 hours measured from midnight to the next midnight.

C. *Defective*

1. The word "defective," when modifying the word "Work," refers to Work that is unsatisfactory, faulty, or deficient in that it does not conform to the Contract Documents or does not meet the requirements of any inspection, reference standard, test, or approval referred to in the Contract Documents, or has been damaged prior to OWNER's final payment (unless responsibility for the protection thereof has been assumed by OWNER at Substantial Completion in accordance with paragraph 12.04 or 12.05).

D. *Furnish, Install, Perform, Provide*

1. The word "furnish," when used in connection with services, materials, or equipment, shall mean to supply and deliver said services, materials, or equipment to the Site (or some other specified location) ready for use or installation and in usable or operable condition.

2. The word "install," when used in connection with services, materials, or equipment, shall mean to put into use or place in final position said services, materials, or equipment complete and ready for intended use.

3. The words "perform" or "provide," when used in connection with services, materials, or equipment, shall mean to furnish and install said services, materials, or equipment complete and ready for intended use.

4. When "furnish," "install," "perform," or "provide" is not used in connection with services, materials, or equipment in a context clearly requiring an obligation of CONTRACTOR, "provide" is implied.

E. Unless stated otherwise in the Contract Documents, words or phrases which have a well-known technical or construction industry or trade meaning are used in the Contract Documents in accordance with such recognized meaning.

ARTICLE 2 - PRELIMINARY MATTERS

2.01 *Delivery of Bonds*

A. When CONTRACTOR delivers the executed Agreement to OWNER, CONTRACTOR shall also deliver to OWNER such Bonds as CONTRACTOR may be required to furnish.

2.02 *Copies of Documents*

A. Refer to Supplementary Conditions regarding copies of Drawings and Project Manuals.

2.03 *Commencement of Contract Times; Notice to Proceed*

A. The Contract Times will commence on the thirtieth day after the Effective Date of the Agreement or, if a Notice to Proceed is given, on the day indicated in the Notice to Proceed. A Notice to Proceed may be given at any time within 30 days after the Effective Date of the Agreement. In no event will the Contract Times commence later than the sixtieth day after the day of Bid opening or the thirtieth day after the Effective Date of the Agreement, whichever date is earlier.

2.04 *Starting the Work*

A. CONTRACTOR shall start to perform the Work on the date when the Contract Times commence. No Work shall be done at the Site prior to the date on which the Contract Times commence.

2.05 *Before Starting Construction*

A. *CONTRACTOR's Review of Contract Documents:* Before undertaking each part of the Work, CONTRACTOR shall carefully study and compare the Contract Documents and check and verify pertinent figures therein and all applicable field measurements. CONTRACTOR shall promptly report in writing to OWNER any conflict, error, ambiguity, or discrepancy which CONTRACTOR may discover and shall obtain a written interpretation or clarification from OWNER before proceeding with any Work affected thereby; however, CONTRACTOR shall not be liable to OWNER for failure to report any conflict, error, ambiguity, or discrepancy in the Contract Documents unless CONTRACTOR knew or reasonably should have known thereof.

B. *Schedules*: Within ten days after the Effective Date of the Agreement (unless otherwise specified in the General Requirements), CONTRACTOR shall submit to OWNER for its timely review:

1. a progress schedule indicating the times (numbers of days or dates) for starting and completing the various stages of the Work, including any Milestones specified in the Contract Documents;

2. a schedule of Shop Drawing and Sample submittals which will list each required submittal and the times for submitting, reviewing, and processing such submittal; and

3. a schedule of values for all of the Work which includes quantities and prices of items which when added together equal the Contract Price and subdivides the Work into component parts in sufficient detail to serve as the basis for progress payments during performance of the Work. Such prices will include an appropriate amount of overhead and profit applicable to each item of Work.

C. *Evidence of Insurance*: Before any Work at the Site is started, CONTRACTOR and OWNER shall each deliver to the other, with copies to each additional insured identified in the Supplementary Conditions, certificates of insurance (and other evidence of insurance which either of them or any additional insured may reasonably request) which CONTRACTOR and OWNER respectively are required to purchase and maintain in accordance with Article 5.

2.06 *Preconstruction Conference*

A. Within 20 days after the Contract Times start to run, but before any Work at the Site is started, a conference attended by CONTRACTOR, OWNER, and others as appropriate will be held to establish a working understanding among the parties as to the Work and to discuss the schedules referred to in paragraph 2.05.B, procedures for handling Shop Drawings and other submittals, processing Applications for Payment, and maintaining required records.

2.07 *Initial Acceptance of Schedules*

A. Unless otherwise provided in the Contract Documents, at least ten days before submission of the first Application for Payment a conference attended by CONTRACTOR, OWNER, and others as appropriate will be held to review for acceptability to OWNER as provided below the schedules submitted in accordance with paragraph 2.05.B. CONTRACTOR shall have an additional ten days to make corrections and adjustments and to complete and resubmit the schedules. No progress payment shall be made to CONTRACTOR until acceptable schedules are submitted to OWNER.

1. The progress schedule will be acceptable to OWNER if it provides an orderly progression of the Work to completion within any specified Milestones and the Contract Times. Such acceptance will not impose on OWNER responsibility for the progress schedule, for sequencing, scheduling, or progress of the Work nor interfere with or relieve CONTRACTOR from CONTRACTOR's full responsibility therefor.

2. CONTRACTOR's schedule of Shop Drawing and Sample submittals will be acceptable to OWNER if it provides a workable arrangement for reviewing and processing the required submittals.

3. CONTRACTOR's schedule of values will be acceptable to OWNER as to form and substance if it provides a reasonable allocation of the Contract Price to component parts of the Work.

ARTICLE 3 - CONTRACT DOCUMENTS: INTENT, AMENDING, REUSE

3.01 *Intent*

A. The Contract Documents are complementary; what is called for by one is as binding as if called for by all.

B. It is the intent of the Contract Documents to describe a functionally complete Project (or part thereof) to be constructed in accordance with the Contract Documents. Any labor, documentation, services, materials, or equipment that may reasonably be inferred from the Contract Documents or from prevailing custom or trade usage as being required to produce the intended result will be provided whether specifically called for at no additional cost to OWNER.

C. Clarifications and interpretations of the Contract Documents shall be issued by OWNER and shall be consistent with the intent of and as reasonably inferable from the Contract Documents.

3.02 *Reference Standards*

A. *Standards, Specifications, Codes, Laws, and Regulations*

1. Reference to standards, specifications, manuals, or codes of any technical society, organization, or association, or to Laws or Regulations, whether such reference be specific or by implication, shall mean the standard, specification, manual, code, or Laws or Regulations in effect at the time of opening of Bids (or on the Effective Date of the Agreement if there were no Bids), except as may be otherwise specifically stated in the Contract Documents.

2. No provision of any such standard, specification, manual or code, or any instruction of a Supplier shall be effective to change the duties or responsibilities of OWNER, CONTRACTOR, or any of their subcontractors, consultants, agents, or employees from those set forth in the Contract Documents, nor shall any such provision or instruction be effective to assign to OWNER, or any of its consultants, agents, or employees any duty or authority to supervise or direct the performance of the Work or any duty or authority to undertake responsibility inconsistent with the provisions of the Contract Documents.

3.03 *Reporting and Resolving Discrepancies*

A. *Reporting Discrepancies*

1. If, during the performance of the Work, CONTRACTOR discovers any conflict, error, ambiguity, or discrepancy within the Contract Documents or between the Contract Documents and any provision of any Law or Regulation applicable to the performance of the Work or of any standard, specification, manual or code, or of any instruction of any Supplier, CONTRACTOR shall report it to OWNER in writing at once. CONTRACTOR shall not proceed with the Work affected thereby (except in an emergency as required by paragraph 6.16.A) until an amendment or supplement to the Contract Documents has been issued by one of the methods indicated in paragraph 3.04.

2. CONTRACTOR shall not be liable to OWNER for failure to report any conflict, error, ambiguity, or discrepancy in the Contract Documents unless CONTRACTOR knew or reasonably should have known thereof.

B. *Resolving Discrepancies*

1. Except as may be otherwise specifically stated in the Contract Documents, the provisions of the Contract Documents shall take precedence in resolving any conflict, error, ambiguity, or discrepancy between the provisions of the Contract Documents and:

a. the provisions of any standard, specification, manual, code, or instruction (whether specifically incorporated by reference in the Contract Documents); or

b. the provisions of any Laws or Regulations applicable to the performance of the Work (unless such an interpretation of the provisions of the Contract Documents would result in violation of such Law or Regulation).

3.04 *Amending and Supplementing Contract Documents*

A. The Contract Documents may be amended to provide for additions, deletions, and revisions in the Work or to modify the terms and conditions thereof in one or more of the following ways: (i) a Written Amendment or (ii) a Change Order.

B. The requirements of the Contract Documents may be supplemented, and minor variations and deviations in the Work may be authorized, by one or more of the following ways: (i) a Field Order; (ii) OWNER's approval of a Shop Drawing or Sample; or (iii) OWNER's written interpretation or clarification.

3.05 *Reuse of Documents*

A. CONTRACTOR and any Subcontractor or Supplier or other individual or entity performing or furnishing any of the Work under a direct or indirect contract with OWNER: (i) shall not have or acquire any title to or ownership rights in any of the Drawings, Specifications, or other documents (or copies of any thereof) prepared by or on behalf of OWNER, including electronic media editions; and (ii) shall not reuse any of such Drawings, Specifications, other documents, or copies thereof on extensions of the Project without written consent of OWNER or use of same on any other project. This prohibition will survive final payment, completion, and acceptance of the Work, or termination or completion of the Contract. Nothing herein shall preclude CONTRACTOR from retaining copies of the Contract Documents for record purposes.

ARTICLE 4 - AVAILABILITY OF LANDS; SUBSURFACE AND PHYSICAL CONDITIONS; REFERENCE POINTS

4.01 *Availability of Lands*

A. OWNER shall furnish the Site. OWNER shall notify CONTRACTOR of any encumbrances or restrictions not of general application but specifically related to use of the Site with which CONTRACTOR must comply in performing the Work. OWNER will obtain in a timely manner and pay for easements for permanent structures or permanent changes in existing facilities.

B. Upon reasonable written request, OWNER shall furnish CONTRACTOR with a current statement of record legal title and legal description of the lands upon which the Work is to be performed and OWNER's interest therein.

C. CONTRACTOR shall provide for all additional lands and access thereto that may be required for temporary construction facilities or storage of materials and equipment. Such additional land uses acquired by CONTRACTORshall be by written agreement with the property owner. A copy of the written agreement shall be provided to OWNER.

4.02 *Subsurface and Physical Conditions*

A. *Reports and Drawings*: The Supplementary Conditions identify:

1. those reports of explorations and tests of subsurface conditions at or contiguous to the Site that OWNER has used in preparing the Contract Documents; and

2. those drawings of physical conditions in or relating to existing surface or subsurface structures at or contiguous to the Site (except Underground Facilities) that OWNER has used in preparing the Contract Documents.

B. *Limited Reliance by CONTRACTOR on Technical Data Authorized*: CONTRACTOR may rely upon the general accuracy of the "technical data" contained in such reports and drawings, but such reports and drawings are not Contract Documents. Such "technical data" is identified in the Supplementary Conditions. Except for such reliance on such "technical data," CONTRACTOR may not rely upon or make any Claim against OWNER with respect to:

1. the completeness of such reports and drawings for CONTRACTOR's purposes, including, but not limited to, any aspects of the means, methods, techniques, sequences, and procedures of construction to be employed by CONTRACTOR, and safety precautions and programs incident thereto; or

2. other data, interpretations, opinions, and information contained in such reports or shown or indicated in such drawings; or

3. any CONTRACTOR interpretation of or conclusion drawn from any "technical data" or any such other data, interpretations, opinions, or information.

4.03 *Differing Subsurface or Physical Conditions*

A. Notice: If CONTRACTOR believes that any subsurface or physical condition at or contiguous to the Site that is uncovered or revealed either:

1. differs substantially and materially from that shown or indicated in the Contract Documents; or

2. is of an unusual nature, and differs substantially and materially from conditions ordinarily encountered and generally recognized as inherent in work of the character provided for in the Contract Documents;

then CONTRACTOR shall, promptly after becoming aware thereof and before further disturbing the subsurface or physical conditions or performing any Work in connection therewith (except in an emergency as required by paragraph 6.16.A), notify OWNER in writing about such condition. CONTRACTOR shall not further disturb such condition or perform any Work in connection therewith (except as aforesaid) until receipt of written order by OWNER to do so.

B. *OWNER's Review*: After receipt of written notice as required by paragraph 4.03.A, OWNER will promptly review the pertinent condition, determine the necessity of OWNER's obtaining additional exploration or tests with respect thereto, and advise CONTRACTOR in writing of findings and conclusions.

C. *Possible Price and Times Adjustments*

1. The Contract Price or the Contract Times, or both, will be equitably adjusted to the extent that the existence of such differing subsurface or physical condition causes an increase or decrease in CONTRACTOR's cost of, or time required for, performance of the Work, as determined by OWNER; subject to the following:

a. such condition must meet any one or more of the categories described in paragraph 4.03.A; and

b. with respect to Work that is paid for on a Unit Price Basis, any adjustment in Contract Price will be subject to the provisions of Article 9.

2. CONTRACTOR shall not be entitled to any adjustment in the Contract Price or Contract Times if:

a. CONTRACTOR knew of the existence of such conditions at the time CONTRACTOR made a final commitment to OWNER in respect of Contract Price and Contract Times by the submission of a Bid or becoming bound under a negotiated contract; or

b. the existence of such condition could reasonably have been discovered or revealed as a result of any examination, investigation, exploration, test, or study of the Site and contiguous areas required by the Bidding Requirements or Contract Documents to be conducted by or for CONTRACTOR prior to CONTRACTOR's making such final commitment; or

c. CONTRACTOR failed to give the written notice within the time and as required by paragraph 4.03.A.

3. If OWNER and CONTRACTOR are unable to agree on entitlement to or on the amount or extent, if any, of any adjustment in the Contract Price or Contract Times, or both, a Claim may be made therefor as provided in Article 9. However, OWNER, shall not be liable to CONTRACTOR for any claims, costs, losses, or damages (including but not limited to all fees and charges of engineers, architects, attorneys, and other professionals and all court or arbitration or other dispute resolution costs) sustained by CONTRACTOR on or in connection with any other project or anticipated project.

4.04 *Underground Facilities*

A. *Shown or Indicated*: The information and data shown or indicated in the Contract Documents with respect to existing Underground Facilities at or contiguous to the Site is based on information and data furnished to OWNER by OWNERs of such Underground Facilities, including OWNER, or by others. Unless it is otherwise expressly provided in the Supplementary Conditions:

1. OWNER shall not be responsible for the accuracy or completeness of any such information or data; and

2. The cost of all of the following will be included in the Contract Price, and CONTRACTOR shall have full responsibility for:

a. reviewing and checking all such information and data;

b. locating and exposing when requested by OWNER all Underground Facilities within the Work area whether they are indicated in the Contract Documents;

c. coordination of the Work with OWNERs of such Underground Facilities, including OWNER, during construction; and

d. the safety and protection of all Underground Facilities and repairing any damage thereto resulting from the Work;

e. Notifying all utility companies, all pipeline owners, or other parties affected, and endeavoring to have all necessary adjustments of the public or private utility fixtures, pipelines, and other appurtenances within or adjacent to the limit, of construction made as soon as practicable; and

f. Notification concerning work near buried utilities as required by Section 479.47, Code of Iowa (2011), and for conducting work as required therein.

3. Water lines, gas lines, wire lines, communication lines, service connections, water and gas meter boxes, water and gas valve boxes, light standards, cableways, signals, and all other utility appurtenances within the limits of the proposed construction, which are to be relocated or adjusted, are to be moved by OWNERs of the utility at their expense, except as otherwise provided for in the Contract Documents;

4. It is understood and agreed that CONTRACTOR has considered in the Bid all of the permanent and temporary utility appurtenances in their present or relocated positions as shown in the Contract Documents and that additional compensation will not be allowed for any delays, inconvenience, or damage sustained by CONTRACTOR due to any interference from the utility appurtenances or their operation or relocation.

B. *Not Shown or Indicated*

1. If an Underground Facility is uncovered or revealed at or contiguous to the Site which was not shown or indicated, or not shown or indicated with reasonable accuracy in the Contract Documents, CONTRACTOR shall, promptly after becoming aware thereof and before further disturbing conditions affected thereby or performing any Work in connection therewith (except in an emergency as required by paragraph 6.16.A), identify OWNER of such Underground Facility and give written notice to that owner and to OWNER. OWNER will promptly review the Underground Facility and determine the extent, if any, to which a change is required in the Contract Documents to reflect and document the consequences of the existence or location of the Underground Facility. During such time, CONTRACTOR shall be responsible for the safety and protection of such Underground Facility. No compensation shall be due for any Work stoppage caused by the location of an Underground Facility.

2. If OWNER concludes that a change in the Contract Documents is required, a Work Change Directive or a Change Order will be issued to reflect and document such consequences. An equitable adjustment shall be made in the Contract Times, to the extent that it is attributable to the existence of an Underground Facility.

4.05 *Reference Points*

A. OWNER shall provide engineering surveys to establish reference points for construction which in OWNER's judgment are necessary to enable CONTRACTOR to proceed with the Work. CONTRACTOR shall be responsible for laying out the Work, shall protect and preserve the established reference points and property monuments, and shall make no changes or relocations without the prior written approval of OWNER. CONTRACTOR shall report to OWNER whenever any reference point or property monument is lost or destroyed or requires relocation because of necessary changes in grades or locations, and shall be responsible for the accurate replacement or relocation of such reference points or property monuments by professionally qualified personnel.

4.06 *Hazardous Environmental Condition at Site*

A. *Reports and Drawings*: Reference is made to the Supplementary Conditions for the identification of those reports and drawings relating to a Hazardous Environmental Condition identified at the Site, if any, that have been utilized by OWNER in the preparation of the Contract Documents.

B. *Limited Reliance by CONTRACTOR on Technical Data Authorized:* CONTRACTOR may rely upon the general accuracy of the "technical data" contained in such reports and drawings, but such reports and drawings are not Contract Documents. Such "technical data" is identified in the Supplementary Conditions. Except for such reliance on such "technical data," CONTRACTOR may not rely upon or make any Claim against OWNER or OWNER's Professional Consultants with respect to:

1. the completeness of such reports and drawings for CONTRACTOR's purposes, including, but not limited to, any aspects of the means, methods, techniques, sequences and procedures of construction to be employed by CONTRACTOR and safety precautions and programs incident thereto; or

2. other data, interpretations, opinions and information contained in such reports or shown or indicated in such drawings; or

3. any CONTRACTOR interpretation of or conclusion drawn from any "technical data" or any such other data, interpretations, opinions or information.

C. CONTRACTOR shall not be responsible for any Hazardous Environmental Condition uncovered or revealed at the Site which was not shown or indicated in Drawings or Specifications or identified in the Contract Documents to be within the scope of the Work. CONTRACTOR shall be responsible for a Hazardous Environmental Condition

created with any materials brought to the Site by CONTRACTOR, Subcontractors, Suppliers, or anyone else for whom CONTRACTOR is responsible.

D. If CONTRACTOR encounters a Hazardous Environmental Condition or if CONTRACTOR or anyone for whom CONTRACTOR is responsible creates a Hazardous Environmental Condition, CONTRACTOR shall immediately: (i) secure or otherwise isolate such condition; (ii) stop all Work in connection with such condition and in any area affected thereby (except in an emergency as required by paragraph 6.16); and (iii) notify OWNER (and promptly thereafter confirm such notice in writing). OWNER may retain a qualified expert to evaluate such condition or take corrective action, if any.

E. CONTRACTOR shall not be required to resume Work in connection with such condition or in any affected area until after OWNER has obtained any required permits related thereto and delivered to CONTRACTOR written notice: (i) specifying that such condition and any affected area is or has been rendered safe for the resumption of Work; or (ii) specifying any special conditions under which such Work may be resumed safely. If OWNER and CONTRACTOR cannot agree as to entitlement to or on the amount or extent, if any, of any adjustment in Contract Price or Contract Times, or both, as a result of such Work stoppage or such special conditions under which Work is agreed to be resumed by CONTRACTOR, either party may make a Claim therefor as provided in Article 9.

F. If after receipt of such written notice CONTRACTOR does not agree to resume such Work based on a reasonable belief it is unsafe, or does not agree to resume such Work under such special conditions, then OWNER may order the portion of the Work that is in the area affected by such condition to be deleted from the Work. If OWNER and CONTRACTOR cannot agree as to entitlement to or on the amount or extent, if any, of an adjustment in Contract Price or Contract Times as a result of deleting such portion of the Work, then either party may make a Claim therefor as provided in Article 9. OWNER may have such deleted portion of the Work performed by OWNER's own forces or others in accordance with Article 7.

G. To the fullest extent permitted by Laws and Regulations, OWNER shall indemnify and hold harmless CONTRACTOR, OWNER's Professional Consultants and the officers, directors, partners, employees, agents, other consultants, and subcontractors of each and any of them from and against all claims, costs, losses, and damages (including but not limited to all fees and charges of engineers, architects, attorneys, and other professionals and all court or arbitration or other dispute resolution costs) arising out of or relating to a Hazardous Environmental Condition, provided that such Hazardous Environmental Condition: (i) was not shown or indicated in the Drawings or Specifications or identified in the Contract Documents to be included within the scope of the Work, and (ii) was not created by CONTRACTOR or by anyone for whom CONTRACTOR is responsible. Nothing in this paragraph 4.06.E shall obligate OWNER to indemnify any individual or entity from and against the consequences of that individual's or entity's own negligence.

H. To the fullest extent permitted by Laws and Regulations, CONTRACTOR shall indemnify and hold harmless OWNER, OWNER's Professional Consultants, and the officers, directors, partners, employees, agents, other consultants, and subcontractors of each and any of them from and against all claims, costs, losses, and damages (including but not limited to all fees and charges of engineers, architects, attorneys, and other professionals and all court or arbitration or other dispute resolution costs) arising out of or relating to a Hazardous Environmental Condition created by CONTRACTOR or by anyone for whom CONTRACTOR is responsible. Nothing in this paragraph 4.06.F shall obligate CONTRACTOR to indemnify any individual or entity from and against the consequences of that individual's or entity's own negligence.

I. The provisions of paragraphs 4.02, 4.03, and 4.04 are not intended to apply to a Hazardous Environmental Condition uncovered or revealed at the Site.

ARTICLE 5 - BONDS AND INSURANCE

5.01 *Performance, Payment, and Other Bonds*

A. CONTRACTOR shall furnish performance and payment Bonds, each in an amount at least equal to the Contract Price as security for the faithful performance and payment of all CONTRACTOR's obligations under the Contract Documents. These Bonds shall remain in effect at least until one year after the date when final payment becomes due, except as provided otherwise by Laws or Regulations or by the Contract Documents. CONTRACTOR shall also furnish such other Bonds as are required by the Contract Documents.

B. All Bonds shall be in the form prescribed by the Contract Documents except as provided otherwise by Laws or Regulations, and shall be executed by such sureties as are named in the current list of "Companies Holding Certificates of Authority as Acceptable Sureties on Federal Bonds and as Acceptable Reinsuring Companies" as published in Circular 570 (amended) by the Financial Management Service, Surety Bond Branch, U.S. Department of the Treasury. All Bonds signed by an agent must be accompanied by a certified copy of such agent's authority to act.

C. If the surety on any Bond furnished by CONTRACTOR is declared bankrupt or becomes insolvent or its right to do business is terminated in any state where any part of the Project is located or it ceases to meet the requirements of paragraph 5.01.B, CONTRACTOR shall within 20 days thereafter substitute another Bond and surety, both of which shall comply with the requirements of paragraphs 5.01.B and 5.02.

5.02 *Licensed Sureties and Insurers*

A. All Bonds and insurance required by the Contract Documents to be purchased and maintained by CONTRACTOR shall be obtained from surety or insurance companies that are duly licensed or authorized in the jurisdiction in which the Project is located to issue Bonds or insurance policies for the limits and coverages so required. Such surety and insurance companies shall also meet such additional requirements and qualifications as may be provided in the Supplementary Conditions.

5.03 *Certificates of Insurance*

A. CONTRACTOR shall deliver to OWNER, with copies to each additional insured identified in the Supple-

mentary Conditions, certificates of insurance (and other evidence of insurance requested by OWNER or any other additional insured) which CONTRACTOR is required to purchase and maintain.

5.04 *CONTRACTOR's Liability Insurance*

A. CONTRACTOR shall purchase and maintain such liability and other insurance as is appropriate for the Work being performed and, in addition, provide protection from claims set forth below which may arise out of or result from CONTRACTOR's performance of the Work and CONTRACTOR's other obligations under the Contract Documents, whether it is to be performed by CONTRACTOR, any Subcontractor or Supplier, or by anyone directly or indirectly employed by any of them to perform any of the Work, or by anyone for whose acts any of them may be liable:

1. claims under workers' compensation, disability benefits, and other similar employee benefit acts;

2. claims for damages because of bodily injury, occupational sickness or disease, or death of CONTRACTOR's employees;

3. claims for damages because of bodily injury, sickness or disease, or death of any person other than CONTRACTOR's employees;

4. claims for damages insured by reasonably available personal injury liability coverage which are sustained: (i) by any person as a result of an offense directly or indirectly related to the employment of such person by CONTRACTOR, or (ii) by any other person for any other reason;

5. claims for damages, other than to the Work itself, because of injury to or destruction of tangible property wherever located, including loss of use resulting therefrom; and

6. claims for damages because of bodily injury or death of any person or property damage arising out of the ownership, maintenance or use of any motor vehicle.

B. The policies of insurance so required by this paragraph 5.04 to be purchased and maintained shall:

1. with respect to insurance required by paragraphs 5.04.A.3 through 5.04.A.6 inclusive, include as additional insureds (subject to any customary exclusion in respect of professional liability) OWNER, OWNER's Professional Consultants, and any other individuals or entities identified in the Supplementary Conditions, all of whom shall be listed as additional insureds, and include coverage for the respective officers, directors, partners, employees, agents, and other consultants and subcontractors of each and any of all such additional insureds, and the insurance afforded to these additional insureds shall provide primary coverage for all claims covered thereby;

2. include at least the specific coverages and be written for not less than the limits of liability provided in the Supplementary Conditions or required by Laws or Regulations, whichever is greater;

3. include completed operations insurance;

4. include contractual liability insurance covering CONTRACTOR's indemnity obligations under paragraphs 6.07, 6.11, and 6.20;

5. contain a provision or endorsement that the coverage afforded will not be canceled, materially changed or renewal refused until at least thirty days prior written notice has been given to OWNER and to each other additional insured identified in the Supplementary Conditions to whom a certificate of insurance has been issued (and the certificates of insurance furnished by CONTRACTOR pursuant to paragraph 5.03 will so provide); and

6. remain in effect at least until final payment and at all times thereafter when CONTRACTOR may be correcting, removing, or replacing defective Work in accordance with paragraph 11.07.

C. CONTRACTOR shall purchase as provided in the Supplementary Conditions, OWNER's and CONTRACTOR's Protective Liability Insurance from CONTRACTOR's sources as primary coverage for OWNER and OWNER's Professional Consultant.

5.05 *Acceptance of Bonds and Insurance; Option to Replace*

A. If OWNER has any objection to the coverage afforded by or other provisions of the Bonds or insurance required to be purchased and maintained by CONTRACTOR in accordance with Article 5 on the basis of non-conformance with the Contract Documents, OWNER shall so notify CONTRACTOR in writing within 10 days after receipt of the certificates (or other evidence requested) required by paragraph 2.05.C. CONTRACTOR shall provide such additional information in respect of insurance provided as OWNER may reasonably request. If CONTRACTOR does not purchase or maintain all of the Bonds and insurance required by the Contract Documents, OWNER shall notify CONTRACTOR in writing of such failure to purchase prior to the start of the Work, or of such failure to maintain prior to any change in the required coverage. Without prejudice to any other right or remedy, OWNER may elect to obtain equivalent Bonds or insurance to protect its interests at the expense of CONTRACTOR, and a Change Order shall be issued to adjust the Contract Price accordingly.

5.06 *Property Insurance*

A. CONTRACTOR shall purchase and maintain property insurance upon the Work at the site in the amount of the full replacement cost thereof (subject to such deductible amounts as may be provided in these Supplementary Conditions or required by Laws and Regulations). This insurance shall:

1. include the interests of OWNER, CONTRACTOR, Subcontractors, OWNER's Professional Consultants and any other persons or entities identified in the Supplementary Conditions, each of whom is deemed to have an insurable interest and shall be listed as an insured or additional insured;

2. be written on a Builder's Risk "all-risk or open peril or special causes of loss policy form that shall at least include insurance for physical loss and damage to

the Work, temporary buildings, falsework and Work in transit and shall insure against at least the following perils: fire, lightning, extended coverage, theft, vandalism and malicious mischief, earthquake, collapse, debris removal, demolition occasioned by enforcement of Laws and Regulations, water damage, and such other perils as may be specifically required by the Supplementary Conditions;

3. include expenses incurred in the repair or replacement of any insured property (including but not limited to fees and charges of engineers and architects);

4. cover materials and equipment in transit for incorporation in the Work or stored at the site or at another location that was agreed to in writing by OWNER prior to being incorporated in the Work, provided that such materials and equipment have been included in an Application for Payment recommended by OWNER; and

5. be maintained in effect until final payment is made.

B. CONTRACTOR shall be responsible for any deductible or self-insured retention.

ARTICLE 6 - CONTRACTOR'S RESPONSIBILITIES

6.01 *Supervision and Superintendence*

A. CONTRACTOR shall supervise, inspect, and direct the Work competently and efficiently, devoting such attention thereto and applying such skills and expertise as may be necessary to perform the Work in accordance with the Contract Documents. CONTRACTOR shall be solely responsible for the means, methods, techniques, sequences, and procedures of construction. CONTRACTOR shall be responsible to see that the completed Work complies accurately with the Contract Documents.

B. At all times during the progress of the Work, CONTRACTOR shall assign a competent resident superintendent thereto who shall not be replaced without written notice to OWNER except under extraordinary circumstances. The superintendent will be CONTRACTOR's representative at the Site and shall have authority to act on behalf of CONTRACTOR. All communications given to or received from the superintendent shall be binding on CONTRACTOR. The name, address and telephone number of the Resident Superintendent shall be provided to OWNER prior to commencement of Work.

6.02 *Labor; Working Hours*

A. CONTRACTOR shall provide competent, suitably qualified personnel to survey, layout, and construct the Work as required by the Contract Documents. CONTRACTOR shall at all times maintain good discipline and order at the Site.

B. Except as otherwise required for the safety or protection of persons or the Work or property at the Site or adjacent thereto, and except as otherwise stated in the Contract Documents, all Work at the Site shall be performed during regular working hours, and CONTRACTOR will not permit overtime work or the performance of Work on Saturday, Sunday, or any legal holiday without OWNER's written consent given after prior written notice to OWNER.

6.03 *Services, Materials, and Equipment*

A. Unless otherwise specified in the General Requirements, CONTRACTOR shall provide and assume full responsibility for all services, materials, equipment, labor, transportation, construction equipment and machinery, tools, appliances, fuel, power, light, heat, telephone, water, sanitary facilities, temporary facilities, and all other facilities and incidentals necessary for the performance, testing, start-up, and completion of the Work.

B. All materials and equipment incorporated into the Work shall be as specified or, if not specified, shall be of good quality and new, except as otherwise provided in the Contract Documents. All warranties and guarantees specifically called for by the Specifications shall expressly run to the benefit of OWNER. If required by OWNER, CONTRACTOR shall furnish satisfactory evidence (including reports of required tests) as to the source, kind, and quality of materials and equipment. All materials and equipment shall be stored, applied, installed, connected, erected, protected, used, cleaned, and conditioned in accordance with instructions of the applicable Supplier, except as otherwise may be provided in the Contract Documents.

6.04 *Progress Schedule*

A. CONTRACTOR shall adhere to the progress schedule established in accordance with paragraph 2.07 as it may be adjusted from time to time as provided below.

1. CONTRACTOR shall submit to OWNER for acceptance (to the extent indicated in paragraph 2.07) proposed adjustments in the progress schedule that will not result in changing the Contract Times. Such adjustments will conform generally to the progress schedule then in effect and additionally will comply with any provisions of the General Requirements applicable thereto.

2. Proposed adjustments in the progress schedule that will change the Contract Times shall be submitted in accordance with the requirements of Article 10. Such adjustments may only be made by a Change Order or Written Amendment in accordance with Article 10.

6.05 *Substitutes and "Or-Equals"*

A. Whenever an item of material or equipment is specified or described in the Contract Documents by using the name of a proprietary item or the name of a particular Supplier, the specification or description is intended to establish the type, function, appearance, and quality required. Unless the specification or description contains or is followed by words reading that no like, equivalent, or "or-equal" item or no substitution is permitted, other items of material or equipment or material or equipment of other Suppliers may be submitted to OWNER for review under the circumstances described below:

1. *"Or-Equal" Items*: If, in OWNER's sole discretion, an item of material or equipment proposed by CONTRACTOR is functionally equal to that named and sufficiently similar so that no change in related Work

will be required, it may be considered by OWNER as an "or-equal" item, in which case review and approval of the proposed item may, in OWNER's sole discretion, be accomplished without compliance with some or all of the requirements for approval of proposed substitute items. For the purposes of this paragraph 6.05.A.1, a proposed item of material or equipment will be considered functionally equal to an item so named if:

a. in the exercise of reasonable judgment OWNER determines that: (i) it is at least equal in quality, durability, appearance, strength, and design characteristics; (ii) it will reliably perform at least equally well the function imposed by the design concept of the completed Project as a functioning whole, and

b. CONTRACTOR certifies that: (i) there is no increase in cost to OWNER; and (ii) it will conform substantially to the detailed requirements of the item named in the Contract Documents.

2. *Substitute Items*

a. If, in OWNER's sole discretion, an item of material or equipment proposed by CONTRACTOR does not qualify as an "or-equal" item under paragraph 6.05.A.1, it will be considered a proposed substitute item.

b. CONTRACTOR shall submit sufficient information as provided below to allow OWNER to determine that the item of material or equipment proposed is essentially equivalent to that named and an acceptable substitute therefor. Requests for review of proposed substitute items of material or equipment will not be accepted by OWNER from anyone other than CONTRACTOR.

c. The procedure for review by OWNER will be as set forth in paragraph 6.05.A.2.d, as supplemented in the General Requirements and as OWNER may decide is appropriate under the circumstances.

d. CONTRACTOR shall first make written application to OWNER for review of a proposed substitute item of material or equipment that CONTRACTOR seeks to furnish or use. The application shall certify that the proposed substitute item will adequately perform the functions and achieve the results called for by the general design, be similar in substance to that specified, and be suited to the same use as that specified. The application will state the extent, if any, to which the use of the proposed substitute item will prejudice CONTRACTOR's achievement of Substantial Completion on time, whether use of the proposed substitute item in the Work will require a change in any of the Contract Documents (or in the provisions of any other direct contract with OWNER for work on the Project) to adapt the design to the proposed substitute item and whether incorporation or use of the proposed substitute item in connection with the Work is subject to payment of any license fee or royalty. All variations of the proposed substitute item from that specified shall be identified in the application, and available engineering, sales, maintenance, repair, and replacement services shall be indicated. The application shall also contain an itemized estimate of all costs or credits that will result directly or indirectly from use of such substitute item, including costs of redesign and claims of other contractors affected by any resulting change, all of which will be considered by OWNER in evaluating the proposed substitute item. OWNER may require CONTRACTOR to furnish additional data about the proposed substitute item.

B. *Substitute Construction Methods or Procedures*: If a specific means, method, technique, sequence, or procedure of construction is shown or indicated in and expressly required by the Contract Documents, CONTRACTOR may furnish or utilize a substitute means, method, technique, sequence, or procedure of construction approved by OWNER. CONTRACTOR shall submit sufficient information to allow OWNER, in OWNER's sole discretion, to determine that the substitute proposed is equivalent to that expressly called for by the Contract Documents. The procedure for review by OWNER will be similar to that provided in subparagraph 6.05.A.2.

C. *Owner's Evaluation*: OWNER will be allowed a reasonable time within which to evaluate each proposal or submittal made pursuant to paragraphs 6.05.A and 6.05.B. OWNER will be the sole judge of acceptability. No "or-equal" or substitute will be ordered, installed or utilized until OWNER's review is complete, which will be evidenced by either a Change Order for a substitute, an approved Shop Drawing for an "or equal". OWNER will advise CONTRACTOR in writing of any negative determination.

D. *Special Guarantee*: OWNER may require CONTRACTOR to furnish at CONTRACTOR's expense a special performance guarantee or other surety with respect to any substitute.

E. *CONTRACTOR's Expense*: CONTRACTOR shall provide all data in support of any proposed substitute or "or-equal" at CONTRACTOR's expense.

6.06 *Concerning Subcontractors, Suppliers, and Others*

A. CONTRACTOR shall not employ any Subcontractor, Supplier, or other individual or entity (including those acceptable to OWNER as indicated in paragraph 6.06.B), whether initially or as a replacement, against whom OWNER has reasonable objection. CONTRACTOR shall not be required to employ any Subcontractor, Supplier, or other individual or entity to furnish or perform any of the Work against whom CONTRACTOR has reasonable objection.

B. If the Supplementary Conditions require the identity of certain Subcontractors, Suppliers, or other individuals or entities to be submitted to OWNER in advance for acceptance by OWNER by a specified date prior to the Effective Date of the Agreement, and if CONTRACTOR has submitted a list thereof in accordance with the Supplementary Conditions, OWNER's acceptance (either in writing or by failing to make written objection thereto by the date indicated for acceptance or objection in the Bidding Documents or the Contract Documents) of any such Subcontractor, Supplier, or other individual or entity so identified may be revoked on the basis of reasonable objection after due investigation. CONTRACTOR shall submit an acceptable replacement for the rejected Subcontractor, Supplier, or other individual or entity,

and the Contract Price will be adjusted by the difference in the cost occasioned by such replacement, and an appropriate Change Order will be issued or Written Amendment signed. No acceptance by OWNER of any such Subcontractor, Supplier, or other individual or entity, whether initially or as a replacement, shall constitute a waiver of any right of OWNER to reject defective Work.

C. CONTRACTOR shall be fully responsible to OWNER for all acts and omissions of the Subcontractors, Suppliers, and other individuals or entities performing or furnishing any of the Work just as CONTRACTOR is responsible for CONTRACTOR's own acts and omissions. Nothing in the Contract Documents shall create for the benefit of any such Subcontractor, Supplier, or other individual or entity any contractual relationship between OWNER and any such Subcontractor, Supplier or other individual or entity, nor shall it create any obligation on the part of OWNER to pay or to see to the payment of any moneys due any such Subcontractor, Supplier, or other individual or entity except as may otherwise be required by Laws and Regulations.

D. CONTRACTOR shall be solely responsible for scheduling and coordinating the Work of Subcontractors, Suppliers, and other individuals or entities performing or furnishing any of the Work under a direct or indirect contract with CONTRACTOR.

E. CONTRACTOR shall require all Subcontractors, Suppliers, and such other individuals or entities performing or furnishing any of the Work to communicate with OWNER through CONTRACTOR.

F. The divisions and sections of the Specifications and the identifications of any Drawings shall not control CONTRACTOR in dividing the Work among Subcontractors or Suppliers or delineating the Work to be performed by any specific trade.

G. All Work performed for CONTRACTOR by a Subcontractor or Supplier will be pursuant to an appropriate agreement between CONTRACTOR and the Subcontractor or Supplier which specifically binds the Subcontractor or Supplier to the applicable terms and conditions of the Contract Documents for the benefit of OWNER. Whenever any such agreement is with a Subcontractor or Supplier who is listed as an additional insured on property insurance, the agreement between CONTRACTOR and the Subcontractor or Supplier will contain provisions whereby the Subcontractor or Supplier waives all rights against OWNER, CONTRACTOR, OWNER's Professional Consultant, and all other individuals or entities identified in the Supplementary Conditions to be listed as insureds or additional insureds (and the officers, directors, partners, employees, agents, and other consultants and subcontractors of each and any of them) for all losses and damages caused by, arising out of, relating to, or resulting from any of the perils or causes of loss covered by such policies and any other property insurance applicable to the Work. If the insurers on any such policies require separate waiver forms to be signed by any Subcontractor or Supplier, CONTRACTOR will obtain the same.

6.07 *Patent Fees and Royalties*

A. CONTRACTOR shall pay all license fees and royalties and assume all costs incident to the use in the performance of the Work or the incorporation in the Work of any invention, design, process, product, or device which is the subject of patent rights or copyrights held by others. If a particular invention, design, process, product, or device is specified in the Contract Documents for use in the performance of the Work and if to the actual knowledge of OWNER its use is subject to patent rights or copyrights calling for the payment of any license fee or royalty to others, the existence of such rights shall be disclosed by OWNER in the Contract Documents. To the fullest extent permitted by Laws and Regulations, CONTRACTOR shall indemnify and hold harmless OWNER, OWNER's Professional Consultant, and the officers, directors, partners, employees or agents, and other consultants of each and any of them from and against all claims, costs, losses, and damages (including but not limited to all fees and charges of engineers, architects, attorneys, and other professionals and all court or arbitration or other dispute resolution costs) arising out of or relating to any infringement of patent rights or copyrights incident to the use in the performance of the Work or resulting from the incorporation in the Work of any invention, design, process, product, or device not specified in the Contract Documents.

6.08 *Permits*

A. Unless otherwise provided in the Supplementary Conditions, CONTRACTOR shall obtain and pay for all construction permits and licenses. OWNER shall assist CONTRACTOR, when necessary, in obtaining such permits and licenses. CONTRACTOR shall pay all governmental charges and inspection fees necessary for the prosecution of the Work which are applicable at the time of opening of Bids, or, if there are no Bids, on the Effective Date of the Agreement. CONTRACTOR shall pay all charges of utility owners for connections to the Work.

6.09 *Laws and Regulations*

A. CONTRACTOR shall give all notices and comply with all Laws and Regulations applicable to the performance of the Work. Except where otherwise expressly required by applicable Laws and Regulations, OWNER shall not be responsible for monitoring CONTRACTOR's compliance with any Laws or Regulations.

B. If CONTRACTOR performs any Work knowing or having reason to know that it is contrary to Laws or Regulations, CONTRACTOR shall bear all claims, costs, losses, and damages (including but not limited to all fees and charges of engineers, architects, attorneys, and other professionals and all court or arbitration or other dispute resolution costs) arising out of or relating to such Work; however, it shall not be CONTRACTOR's primary responsibility to make certain that the Specifications and Drawings are in accordance with Laws and Regulations, but this shall not relieve CONTRACTOR of CONTRACTOR's obligations under paragraph 3.03.

6.10 *Taxes*

A. CONTRACTOR shall pay all sales, consumer, use, and other similar taxes required to be paid by CONTRACTOR in accordance with the Laws and Regulations of the place of the Project which are applicable during the performance of the Work.

6.11 *Use of Site and Other Areas*

A. *Limitation on Use of Site and Other Areas*

1. CONTRACTOR shall confine construction equipment, the storage of materials and equipment, and the operations of workers to the Site and other areas permitted by Laws and Regulations, and shall not unreasonably encumber the Site and other areas with construction equipment or other materials or equipment. CONTRACTOR shall assume full responsibility for any damage to any such land or area, or to OWNER or occupant thereof, or of any adjacent land or areas resulting from the performance of the Work.

2. Should any claim be made by any such owner or occupant because of the performance of the Work, CONTRACTOR shall promptly settle with such other party by negotiation or otherwise resolve the claim by arbitration or other dispute resolution proceeding or at law.

3. To the fullest extent permitted by Laws and Regulations, CONTRACTOR shall indemnify and hold harmless OWNER, OWNER's Professional Consultant, and the officers, directors, partners, employees, agents, and other consultants of each and any of them from and against all claims, costs, losses, and damages (including but not limited to all fees and charges of engineers, architects, attorneys, and other professionals and all court or arbitration or other dispute resolution costs) arising out of or relating to any claim or action, legal or equitable, brought by any such owner or occupant against OWNER, OWNER's Professional Consultant, or any other party indemnified hereunder to the extent caused by or based upon CONTRACTOR's performance of the Work.

B. *Removal of Debris During Performance of the Work*: During the progress of the Work CONTRACTOR shall keep the Site and other areas free from accumulations of waste materials, rubbish, and other debris. Removal and disposal of such waste materials, rubbish, and other debris shall conform to applicable Laws and Regulations.

C. *Cleaning*: Prior to Substantial Completion of the Work, CONTRACTOR shall clean the Site and make it ready for utilization by OWNER. At the completion of the Work, CONTRACTOR shall remove from the Site all tools, appliances, construction equipment and machinery, and surplus materials and shall restore to original condition all property not designated for alteration by the Contract Documents.

D. *Loading Structures*: CONTRACTOR shall not load nor permit any part of any structure to be loaded in any manner that will endanger the structure, nor shall CONTRACTOR subject any part of the Work or adjacent property to stresses or pressures that will endanger it.

6.12 *Record Documents*

A. CONTRACTOR shall maintain in a safe place at the Site one record copy of all Drawings, Specifications, Addenda, Written Amendments, Change Orders, Work Change Directives, Field Orders, and written interpretations and clarifications in good order and annotated to show changes made during construction. These record documents together with all approved Samples and a counterpart of all approved Shop Drawings will be available to OWNER and OWNER's Professional Consultant for reference. Upon completion of the Work, these record documents, Samples, and Shop Drawings will be delivered to OWNER.

6.13 *Safety and Protection*

A. CONTRACTOR shall be solely responsible for initiating, maintaining and supervising all safety precautions and programs in connection with the Work. CONTRACTOR shall take all necessary precautions for the safety of, and shall provide the necessary protection to prevent damage, injury or loss to:

1. all persons on the Site or who may be affected by the Work;

2. all the Work and materials and equipment to be incorporated therein, whether in storage on or off the Site; and

3. other property at the Site or adjacent thereto, including trees, shrubs, lawns, walks, pavements, roadways, structures, utilities, and Underground Facilities not designated for removal, relocation, or replacement in the course of construction.

B. CONTRACTOR shall comply with all applicable Laws and Regulations relating to the safety of persons or property, or to the protection of persons or property from damage, injury, or loss; and shall erect and maintain all necessary safeguards for such safety and protection. CONTRACTOR shall notify owners of adjacent property and of Underground Facilities and other utility owners when prosecution of the Work may affect them, and shall cooperate with them in the protection, removal, relocation, and replacement of their property. All damage, injury, or loss to any property referred to in paragraph 6.13.A.2 or 6.13.A.3 caused, directly or indirectly, in whole or in part, by CONTRACTOR, any Subcontractor, Supplier, or any other individual or entity directly or indirectly employed by any of them to perform any of the Work, or anyone for whose acts any of them may be liable, shall be remedied by CONTRACTOR (except damage or loss attributable to the fault of Drawings or Specifications or to the acts or omissions of OWNER, its employees, or anyone for whose acts OWNER may be liable, and not attributable, directly or indirectly, in whole or in part, to the fault or negligence of CONTRACTOR or any Subcontractor, Supplier, or other individual or entity directly or indirectly employed by any of them). CONTRACTOR's duties and responsibilities for safety and for protection of the Work shall continue until such time as all the Work is completed in accordance with paragraph 12.07.B that the Work is acceptable (except as otherwise expressly provided in connection with Substantial Completion).

C. CONTRACTOR shall be responsible for initiating, maintaining, and supervising all safety precautions and programs in connections with the Work. OWNER will not have such responsibility. No action under taken by OWNER under General Conditions paragraphs 13.1 or 13.2, will constitute a transfer of this responsibility or acceptance of this responsibility by OWNER.

6.14 *Safety Representative*

A. CONTRACTOR shall designate a qualified and experienced safety representative at the Site whose duties and responsibilities shall be the prevention of accidents and the maintaining and supervising of safety precautions and programs.

6.15 *Hazard Communication Programs*

A. CONTRACTOR shall be responsible for coordinating any exchange of material safety data sheets or other hazard communication information required to be made available to or exchanged between or among employers at the Site in accordance with Laws or Regulations.

6.16 *Emergencies*

A. In emergencies affecting the safety or protection of persons or the Work or property at the Site or adjacent thereto, CONTRACTOR is obligated to act to prevent threatened damage, injury, or loss. CONTRACTOR shall give OWNER prompt written notice if CONTRACTOR believes that any significant changes in the Work or variations from the Contract Documents have been caused thereby or are required as a result thereof. If OWNER determines that a change in the Contract Documents is required because of the action taken by CONTRACTOR in response to such an emergency, a Work Change Directive or Change Order will be issued.

6.17 *Shop Drawings and Samples*

A. CONTRACTOR shall submit Shop Drawings to OWNER for review and approval in accordance with the acceptable schedule of Shop Drawings and Sample submittals. All submittals will be identified as OWNER may require and in the number of copies specified in the General Requirements. The data shown on the Shop Drawings will be complete with respect to quantities, dimensions, specified performance and design criteria, materials, and similar data to show OWNER the services, materials, and equipment CONTRACTOR proposes to provide and to enable OWNER to review the information for the limited purposes required by paragraph 6.17.E.

B. CONTRACTOR shall also submit Samples to OWNER for review and approval in accordance with the acceptable schedule of Shop Drawings and Sample submittals. Each Sample will be identified clearly as to material, Supplier, pertinent data such as catalog numbers, and the use for which intended and otherwise as OWNER may require to enable OWNER to review the submittal for the limited purposes required by paragraph 6.17.E. The numbers of each Sample to be submitted will be as specified in the Specifications.

C. Where a Shop Drawing or Sample is required by the Contract Documents or the schedule of Shop Drawings and Sample submittals acceptable to OWNER as required by paragraph 2.07, any related Work performed prior to OWNER's review and approval of the pertinent submittal will be at the sole expense and responsibility of CONTRACTOR.

D. *Submittal Procedures*

1. Before submitting each Shop Drawing or Sample, CONTRACTOR shall have:

a. determined and verified all field measurements, quantities, dimensions, specified performance criteria, installation requirements, materials, catalog numbers, and similar information with respect thereto;

b. determined and verified all materials with respect to intended use, fabrication, shipping, handling, storage, assembly, and installation pertaining to the performance of the Work;

c. determined and verified all information relative to means, methods, techniques, sequences, and procedures of construction and safety precautions and programs incident thereto; and

d. reviewed and coordinated each Shop Drawing or Sample with other Shop Drawings and Samples and with the requirements of the Work and the Contract Documents.

2. Each submittal shall bear a stamp or specific written indication that CONTRACTOR has satisfied CONTRACTOR's obligations under the Contract Documents with respect to CONTRACTOR's review and approval of that submittal.

3. At the time of each submittal, CONTRACTOR shall give OWNER specific written notice of any variations that the Shop Drawing or Sample submitted may have from the requirements of the Contract Documents, such notice to be in a written communication separate from the submittal; and, in addition, shall cause a specific notation to be made on each Shop Drawing and Sample submitted to OWNER for review and approval of each such variation.

E. *OWNER's Review*

1. OWNER will timely review and approve or give notice of necessary corrections to the submitted Shop Drawings and Samples in accordance with the schedule of Shop Drawings and Sample submittals acceptable to OWNER. OWNER's review will be only to determine if the items covered by the submittals will, after installation or incorporation in the Work, conform to the information given in the Contract Documents and be compatible with the design concept of the completed Project as a functioning whole as indicated by the Contract Documents.

2. OWNER's review and approval will not extend to means, methods, techniques, sequences, or procedures of construction (except where a particular means, method, technique, sequence, or procedure of construction is specifically and expressly called for by the Contract Documents) or to safety precautions or programs incident thereto. The review and approval of a separate item as such will not indicate approval of the assembly in which the item functions.

3. OWNER's review and approval of Shop Drawings or Samples shall not relieve CONTRACTOR from responsibility for any variation from the requirements of the Contract Documents unless CONTRACTOR has in writing called OWNER's attention to each such variation at the time of each submittal as required by paragraph 6.17.D.3 and OWNER has given written approval of each such variation by specific written notation thereof incorporated in or accompanying the Shop Drawing or Sample approval; nor will any approval by OWNER relieve CONTRACTOR from responsibility for complying with the requirements of paragraph 6.17.D.1.

F. *Resubmittal Procedures*

1. CONTRACTOR shall make corrections required by OWNER and shall return the required number of corrected copies of Shop Drawings and submit as required new Samples for review and approval. CONTRACTOR shall direct specific attention in writing to revisions other than the corrections called for by OWNER on previous submittals.

6.18 *Continuing the Work*

A. CONTRACTOR shall carry on the Work and adhere to the progress schedule during all disputes or disagreements with OWNER. No Work shall be delayed or postponed pending resolution of any disputes or disagreements, except as permitted by paragraph 13.04 or as OWNER and CONTRACTOR may otherwise agree in writing.

B. Time is an essential element of the Contract, an it is important that the Work continue each working day and pressed vigorously to completion.

6.19 *CONTRACTOR's General Warranty and Guarantee*

A. CONTRACTOR warrants and guarantees to OWNER that all Work will be in accordance with the Contract Documents and will not be defective. CONTRACTOR's warranty and guarantee hereunder excludes defects or damage caused by:

1. abuse, modification, or improper maintenance or operation by persons other than CONTRACTOR, Subcontractors, Suppliers, or any other individual or entity for whom CONTRACTOR is responsible; or

2. normal wear and tear under normal usage.

B. CONTRACTOR's obligation to perform and complete the Work in accordance with the Contract Documents shall be absolute. None of the following will constitute an acceptance of Work that is not in accordance with the Contract Documents or a release of CONTRACTOR's obligation to perform the Work in accordance with the Contract Documents:

1. observations by OWNER;

2. payment by OWNER of any progress or final payment;

3. the issuance of a certificate of Substantial Completion by OWNER or any payment related thereto by OWNER;

4. use or occupancy of the Work or any part thereof by OWNER;

5. any acceptance by OWNER or any failure to do so;

6. any review and approval of a Shop Drawing or Sample submittal or the issuance of a notice of acceptability by OWNER;

7. any inspection, test, or approval by others; or

8. any correction of defective Work by OWNER.

6.20 *Indemnification*

A. To the fullest extent permitted by Laws and Regulations, CONTRACTOR shall indemnify and hold harmless OWNER, OWNER's Professional Consultant, and the officers, directors, partners, employees, agents, and other consultants and subcontractors of each and any of them from and against all claims, costs, losses, and damages (including but not limited to all fees and charges of engineers, architects, attorneys, and other professionals and all court or arbitration or other dispute resolution costs) arising out of or relating to the performance of the Work, provided that any such claim, cost, loss, or damage:

1. is attributable to bodily injury, sickness, disease, or death, or to injury to or destruction of tangible property (other than the Work itself), including the loss of use resulting therefrom; and

2. is caused in whole or in part by any negligent act or omission of CONTRACTOR, any Subcontractor, any Supplier, or any individual or entity directly or indirectly employed by any of them to perform any of the Work or anyone for whose acts any of them may be liable, regardless of whether caused in part by any negligence or omission of an individual or entity indemnified hereunder or whether liability is imposed upon such indemnified party by Laws and Regulations regardless of the negligence of any such individual or entity.

B. In any and all claims against OWNER or OWNER's Professional Consultant or any of their respective consultants, agents, officers, directors, partners, or employees by any employee (or the survivor or personal representative of such employee) of CONTRACTOR, any Subcontractor, any Supplier, or any individual or entity directly or indirectly employed by any of them to perform any of the Work, or anyone for whose acts any of them may be liable, the indemnification obligation under paragraph 6.20.A shall not be limited in any way by any limitation on the amount or type of damages, compensation, or benefits payable by or for CONTRACTOR or any such Subcontractor, Supplier, or other individual or entity under workers' compensation acts, disability benefit acts, or other employee benefit acts.

C. The indemnification obligations of CONTRACTOR under paragraph 6.20.A shall not extend to the liability of OWNER's Professional Consultant or to the officers, directors, partners, employees, agents, and other consultants and subcontractors of each and any of them arising out of the preparation of, or the failure to prepare maps, Drawings, opinions, reports, surveys, designs, or Specifications.

ARTICLE 7 - OTHER WORK

7.01 *Related Work at Site*

A. OWNER may perform other work related to the Project at the Site by OWNER's employees, or let other direct contracts therefor, or have other work performed by utility owners. If such other work is not noted in the Contract Documents, then written notice thereof will be given to CONTRACTOR prior to starting any such other work.

B. CONTRACTOR shall afford each other contractor who is a party to such a direct contract and each utility owner (and OWNER, if OWNER is performing the other work with OWNER's employees) proper and safe access to the Site and a reasonable opportunity for the introduction and storage of materials and equipment and the execution of such other work and shall properly coordinate the Work with theirs. Unless otherwise provided in the Contract Documents, CONTRACTOR shall do all cutting, fitting, and patching of the Work that may be required to properly connect or otherwise make its several parts come together and properly integrate with such other work. CONTRACTOR shall not endanger any work of others by cutting, excavating, or otherwise altering their work and will only cut or alter their work with the written consent of OWNER and the others whose work will be affected. The duties and responsibilities of CONTRACTOR under this paragraph are for the benefit of such utility owners and other contractors to the extent that there are comparable provisions for the benefit of CONTRACTOR in said direct contracts between OWNER and such utility owners and other contractors.

C. If the proper execution or results of any part of CONTRACTOR's Work depends upon work performed by others under this Article 7, CONTRACTOR shall inspect such other work and promptly report to OWNER in writing any delays, defects, or deficiencies in such other work that render it unavailable or unsuitable for the proper execution and results of CONTRACTOR's Work. CONTRACTOR's failure to so report will constitute an acceptance of such other work as fit and proper for integration with CONTRACTOR's Work except for latent defects and deficiencies in such other work.

7.02 *Coordination*

A. If OWNER intends to contract with others for the performance of other work on the Project at the Site, the following will be set forth in Supplementary Conditions:

1. the individual or entity who will have authority and responsibility for coordination of the activities among the various contractors will be identified;

2. the specific matters to be covered by such authority and responsibility will be itemized; and

3. the extent of such authority and responsibilities will be provided.

B. Unless otherwise provided in the Supplementary Conditions, OWNER shall have sole authority and responsibility for such coordination.

ARTICLE 8 - OWNER'S RESPONSIBILITIES

8.01 *Furnish Data*

A. OWNER shall promptly furnish the data required of OWNER under the Contract Documents.

8.02 *Pay Promptly When Due*

A. OWNER shall make payments to CONTRACTOR promptly when they are due as provided in paragraphs 12.02.C and 12.07.C.

8.03 *Lands and Easements; Reports and Tests*

A. OWNER's duties with respect to providing lands and easements and providing engineering surveys to establish reference points are set forth in paragraphs 4.01 and 4.05. Paragraph 4.02 refers to OWNER's identifying and making available to CONTRACTOR copies of reports of explorations and tests of subsurface conditions and drawings of physical conditions in or relating to existing surface or subsurface structures at or contiguous to the Site that have been utilized by OWNER in preparing the Contract Documents.

8.04 *Insurance*

A. OWNER's responsibilities, if any, with respect to purchasing and maintaining liability and property insurance are set forth in Article 5.

8.05 *Limitations on OWNER's Responsibilities*

A. OWNER shall not supervise, direct, or have control or authority over, nor be responsible for, CONTRACTOR's means, methods, techniques, sequences, or procedures of construction, or the safety precautions and programs incident thereto, or for any failure of CONTRACTOR to comply with Laws and Regulations applicable to the performance of the Work. OWNER shall not be responsible for CONTRACTOR's failure to perform the Work in accordance with the Contract Documents.

B. OWNER shall not be obligated to pay standby or down time rental on any equipment used or stored at the Site unless agreed to and included in an approved Change Order.

8.06 *Undisclosed Hazardous Environmental Condition*

A. OWNER's responsibility with respect to any undisclosed Hazardous Environmental Condition is set forth in paragraph 4.06.

8.07 *Evidence of Financial Arrangements*

A. If and to the extent OWNER has agreed to furnish CONTRACTOR reasonable evidence that financial arrangements have been made to satisfy OWNER's obligations under the Contract Documents, OWNER's responsibility in respect thereof will be as set forth in the Supplementary Conditions.

ARTICLE 9 - PAYMENTS

9.01 Scope of Payment

A. CONTRACTOR shall accept the compensation herein provided as full payment for furnishing all material, labor, tools, and equipment and for performing all work under the Contract or any extension thereof allowed under Article 10; also, for all cost arising from the action of the elements or other natural causes, agreements, and performances, non-performances, or delays involving other contractors and third parties, or injunctions or lawsuits resulting therefrom, or from any unforeseen difficulties not otherwise provided for in the Contract Documents and which may be encountered during prosecution of the Work and up to the time of acceptance thereof, except damage to the Work due to acts of war. Nothing herein shall in and of itself be

construed to prejudice or deny any claim filed under provisions of Article 9.05.

B. The Contract Price for any item shall be full compensation for acceptable work and for materials, equipment, tools, and labor for performance of all work necessary to complete the item in accordance with the Contract Documents.

9.02 Payment For Work Performed

A. CONTRACTOR shall receive and accept payment for work performed under the Contract as follows:

1. *Items of Work Performed Which Are Covered by Definite Prices Stipulated in the Contract.* For all items of acceptable work performed which are covered by definite unit prices or lump sum amounts specified in the contract, CONTRACTOR shall receive and accept compensation at the rate specified in the contract, except for items identified as that of significant change as provided in Articles 4.03 and 9.04.

2. In making Contract adjustments, consideration shall be given to the portion of the cost of the Work that can be classified as fixed costs, independent of the exact quantity of work performed, such as transportation and installation costs on equipment, overhead cost, etc. Any price adjustment shall be arrived at from the standpoint that neither party to the contract shall be penalized by the increase or decrease in quantities which occasioned the price adjustment.

B. *Extra Work.*

1. Extra Work ordered by OWNER of a quality or class not covered by the Contract, will be paid for either at an agreed price or on a force account basis.

a. *Agreed Price Basis.* For Extra Work ordered by OWNER and performed on an agreed price basis, OWNER and CONTRACTOR shall enter into a written agreement before the work is undertaken. This written agreement shall describe the Extra Work that is to be done and shall specify the agreed price or prices therefor.

b. *Force Account Basis.*

(1) For Extra Work performed on a force account basis, CONTRACTOR shall receive the rate of wage (or scale) agreed to in writing with OWNER before beginning work for each and every hour that laborers, timekeepers, supervisors, and superintendents are actually engaged in work.

(2) CONTRACTOR shall receive the actual costs paid to, or in behalf of, workers by reason of subsistence and travel allowances, health and welfare benefits, pension fund benefits, or other benefits, when the amounts are required by a collective bargaining agreement or other employment contract generally applicable to the classes of labor employed on the work.

(3) An amount equal to 35 percent of the sum of the above items listed in (1) and (2) will also be paid to CONTRACTOR. The 35 percent shall cover compensation for furnishing the necessary small tools for work, together with all other overhead items of expense.

(4) For property damage, liability, and worker's compensation insurance premiums, unemployment insurance contributions, and social security taxes on the force account work, CONTRACTOR shall receive the actual cost, to which 10 percent will be added. CONTRACTOR shall furnish evidence of the rate or rates paid for such bond, insurance, and tax.

(5) The wage of the superintendent, timekeeper, or supervisor who is employed partly on force account work and partly on other work shall be prorated between two classes of work according to the number of persons shown by the payrolls as employed on each class of work.

(6) For materials used on force account work, CONTRACTOR shall receive the actual cost of materials delivered on the work, including the freight and handling charges as shown by original receipted bills, to which cost shall be added a sum equal to 15 percent thereof.

(7) Rental rate for machinery, tools or equipment (except small hand tools which may be used) and fuel and lubricants shall be based on the average monthly rental rate in the most recent Rental Rate Blue Book published by Dataquest Incorporated. OWNER and CONTRACTOR shall agree on a rental rate in writing before Extra Work on force account basis is performed. Profit percentage shall not be added to the rental rate.

(8) Compensation as herein provided shall be accepted by CONTRACTOR as payment in full for Extra Work done on a force account basis. It will be assumed that such payment includes the use of tools and equipment for which no rate is allowed, overhead, and profit.

(9) At the end of each day, CONTRACTOR shall prepare payrolls in duplicate for labor furnished on a force account basis using OWNER's standard force account forms. Both copies shall be signed by the OWNER's representative and CONTRACTOR's representative. One copy shall be furnished to OWNER and one to CONTRACTOR. Claims for Extra Work performed on a force account basis shall be submitted to OWNER in triplicate. Any receipts or statements required by OWNER to support such claims shall be attached thereto. Such claims shall be filed no later than the tenth day of the month following that in which the work was actually performed, and shall

include all labor charges, rental charges on machinery, tools, and equipment, and all material charges insofar as they are available.

3. *Extra Work Performed by a Subcontractor.* The percentage markup to be allowed to CONTRACTOR for Extra Work (including force account work) performed by a Subcontractor shall be in accordance with the following:

a. 10 percent on the first $50,000 with a $100 minimum.

b. 5 percent on the portion over $50,000.

C. *Deficient Work.* Payment for work judged by OWNER to be deficient Work will be made at the reduced rate specified in the Contract Documents or, if no such rate is specified, at a modification of the Contract Price, as determined by OWNER.

9.03 Cancelled Work

A. OWNER shall have the right to cancel any or all items from the Contract when unforeseen circumstances, unanticipated design changes, or other reasons beyond the control of CONTRACTOR prevent or unreasonably delay completion of the Contract or certain items of the Contract, or when OWNER determines that cancellation is in the public interest.

B. OWNER may prevent CONTRACTOR from starting Work on the Contract or an identified phase of the Contract as a result of a delay caused by OWNER or others.

C. When the Contract period is defined by the approximate starting date and the delay prevents CONTRACTOR starting Work on the Contract or an identified phase of the Contract for 30 calendar days beyond such date, CONTRACTOR may request cancellation by written notice to OWNER stating the reasons therefor.

D. When the Contract period is defined by the late start date and the delay prevents CONTRACTOR starting for more than 30 calendar days after the date of award of Contract and at least 30 calendar days beyond the date which, by notice to OWNER, CONTRACTOR proposed to start work, CONTRACTOR may request cancellation by providing written notice to OWNER, stating the reasons therefor.

E. In the case of 9.03C., or 9.03D., within 30 calendar days from the date of the request, OWNER will eliminate or minimize, if possible, the cause for the delay and issue a Notice to Proceed, redefine the basis on which the Work is to proceed, or cancel the Contract or phase of the Contract.

F. CONTRACTOR shall not use delays that occur prior to starting Work or an identified phase of the Work as a basis of a claim against OWNER except for an extension of Contract period. Notices described in this Article 9 shall be transmitted by ordinary mail.

G. For finished portions of non-major items cancelled, CONTRACTOR will be paid, at the contract unit prices, in accordance with the provisions of Article 9.02. For finished portions of major items cancelled, CONTRACTOR will be paid as provided in Article 9.02. For all items, materials ordered and delivered for the unfinished portion of such cancelled or omitted items, OWNER will pay cost plus 10 percent as an overhead charge. CONTRACTOR's expense for handling or transporting this material shall be included in computing the cost. OWNER will also pay any actual expenses sustained by CONTRACTOR by reason of such cancellation or omission and not represented by work completed or material delivered. In computation of material cost or expenses sustained, no anticipated profit will be included. Material paid for shall become the property of OWNER and shall be disposed of as directed by OWNER.

9.04 Standardized Contract Clauses

A. *Suspensions of Work Ordered by OWNER*

1. If the performance of all or any portion of the Work is suspended or delayed by OWNER in writing for an unreasonable period of time (not originally anticipated, customary, or inherent to the construction industry) and CONTRACTOR believes that additional compensation and/or contract time is due as a result of such suspension or delay, CONTRACTOR shall submit to OWNER, in writing, a request for adjustment within 7 calendar days of receipt of the notice to resume work. The request shall set forth the reasons and support for such adjustment.

2. Upon receipt, OWNER will evaluate CONTRACTOR's request. If OWNER agrees that the cost and/or time required for the performance of the contract has increased as a result of such suspension and the suspension was caused by conditions beyond the control of and not the fault of CONTRACTOR, its Suppliers, or Subcontractors at any approved tier, and not caused by weather, OWNER will make an adjustment (excluding profit) and modify the Contract in writing accordingly. CONTRACTOR will be notified of OWNER's determination whether an adjustment of the Contract is warranted.

3. No Contract adjustment will be allowed unless CONTRACTOR has submitted the written request for adjustment within the time prescribed.

4. No Contract adjustment will be allowed under this clause to the extent that performance would have been suspended or delayed by any other cause, or for which adjustment is provided or excluded under any other term or condition of this Contract.

B. *Significant Changes in the Character of Work.*

1. OWNER reserves the right to make, in writing, at any time during the Work, such changes in quantities and such alterations in the Work as are necessary to satisfactorily complete the Project. Such changes in quantities and alterations will not invalidate the Contract nor release the surety, and CONTRACTOR agrees to perform the Work as altered.

2. If the alterations or changes in quantities significantly change the character of the Work under the Contract, whether such alterations or changes are in themselves significant changes to the character of the Work or, by affecting other work, cause such other work to become significantly different in character, an adjustment, excluding anticipated profit, will be made to

the Contract. The basis for the adjustment shall be agreed upon in writing prior to the performance of the Work. If a basis cannot be agreed upon, then an adjustment will be made either for or against CONTRACTOR in such amount as OWNER may determine to be fair and equitable.

3. If the alterations or changes in quantities do not significantly change the character of the work to be performed under the Contract, the altered Work will be paid for as provided elsewhere in the Contract.

4. The term "significant change" shall apply only to the following circumstances:

a. When the character of the Work, as altered, differs materially in kind or nature from that involved or included in the original proposed construction; or

b. When a major item of Work, defined as an item of Work in excess of $50,000, is increased in excess of 125 percent or decreased below 75 percent of the original Contract quantity. Any allowance for an increase in quantity shall apply only to that portion in excess of 125 percent of original Contract item quantity, or in case of a decrease below 75 percent, to the actual amount of work performed.

9.05 *Disputed Claims For Extra Compensation*

A. In any case where CONTRACTOR deems that extra compensation is due for work or material not clearly covered in the Contract and not ordered by OWNER as Extra Work as defined herein, CONTRACTOR shall file a written claim with OWNER for this extra compensation before commencing the Extra Work upon which the claim is based.

B. OWNER shall be responsible for damages attributable to the performance, nonperformance or delay of any other contractor, governmental agency, utility, firm, corporation, or individual authorized to do work on the project, only when these damages result from negligence on the part of OWNER, its officers or employees. In any case where CONTRACTOR deems extra compensation is due from OWNER as damages resulting from these performances, nonperformances, or delays, CONTRACTOR shall notify OWNER in writing at the time the delay occurs.

C. In all cases, if the notification required pursuant to 9.05.B is not given or, if after the notification is given, OWNER is not afforded the ability to keep strict account of actual costs as defined for force account construction, CONTRACTOR thereby agrees to waive the claim for extra compensation for this work. This notice by CONTRACTOR, and the fact that OWNER has kept account of the cost as aforesaid, shall not be construed as establishing the validity of the claim. The claim, when filed, shall be in writing and in sufficient detail to permit auditing and an intelligent evaluation by OWNER. The claim shall be supported by such documentary evidence as the claimant has available and shall be verified by affidavit of the claimant or other persons having knowledge of the facts. If the claimant wishes an opportunity to present the claim in person, then the claim shall be accompanied by a written request to do so. Where the claimant asks an opportunity to present the claim in person, OWNER, within 30 calendar days of the filing of the claim, will fix a time and place for a meeting, between the claimant and OWNER. OWNER will, within a reasonable time from the filing of the claim or the meeting above referred to, whichever is later, rule upon the validity of the claim and notify the claimant, in writing, of the ruling together with the reasons therefor. In case the claim is found to be just, in whole or in part, it will be allowed and paid to the extent so found. CONTRACTOR shall not institute any court action against OWNER for the adjudication of any claims until the claim has been first presented to OWNER pursuant to this Article.

ARTICLE 10 - CHANGE OF CONTRACT TIMES

10.01 *Change of Contract Times*

A. The Contract Times may only be changed by a Change Order or by a Written Amendment. Any Claim for an adjustment in the Contract Times shall be made in writing and submitted by the party making the claim to the other party to the Contract.

B. Any adjustment of the Contract Times will be determined in accordance with the provisions of this Article 10.

10.02 *Delays Beyond CONTRACTOR's Control*

A. Where CONTRACTOR is prevented from completing any part of the Work within the Contract Times due to delay beyond the control of CONTRACTOR, the Contract Times will be extended in an amount equal to the time lost due to such delay if a Claim is made therefor as provided in paragraph 10.01.A. Delays beyond the control of CONTRACTOR shall include, but not be limited to, negligent acts by OWNER, negligent acts by utility owners or other contractors performing other work as contemplated by Article 7, fires, floods, epidemics, abnormal weather conditions, or acts of God.

10.03 *Delays Within CONTRACTOR's Control*

A. The Contract Times will not be extended due to delays within the control of CONTRACTOR. Delays attributable to and within the control of a Subcontractor or Supplier shall be deemed to be delays within the control of CONTRACTOR.

10.04 *Delays Beyond OWNER's and CONTRACTOR's Control*

A. Where CONTRACTOR is prevented from completing any part of the Work within the Contract Times (or Milestones) due to delay beyond the control of both OWNER and CONTRACTOR, as determined by OWNER in its sole discretion, an extension of the Contract Times in an amount equal to the time lost due to such delay shall be CONTRACTOR's sole and exclusive remedy for such delay.

10.05 *Delay Damages*

A. In no event shall OWNER be liable to CONTRACTOR, any Subcontractor, any Supplier, or any other person or organization, or to any surety for or employee or agent of any of them, for damages arising out of or resulting from:

1. delays caused by or within the control of CONTRACTOR; or

2. delays beyond the control of both OWNER and CONTRACTOR, including, but not limited to, fires, floods, epidemics, abnormal weather conditions, acts of God, or acts or neglect by utility owners or other contractors performing other work as contemplated by Article 7.

ARTICLE 11 - TESTS AND INSPECTIONS; CORRECTION, REMOVAL OR ACCEPTANCE OF DEFECTIVE WORK

11.01 *Notice of Defects*

A. Prompt notice of all defective Work of which OWNER has actual knowledge will be given to CONTRACTOR. All defective Work may be rejected, corrected, or accepted as provided in this Article 11.

11.02 *Access to Work*

A. OWNER, OWNER's Professional Consultant, other representatives and personnel of OWNER, independent testing laboratories, and governmental agencies with jurisdictional interests will have access to the Site and the Work at reasonable times for their observation, inspecting, and testing. CONTRACTOR shall provide them proper and safe conditions for such access and advise them of CONTRACTOR's Site safety procedures and programs so that they may comply therewith as applicable.

11.03 *Tests and Inspections*

A. CONTRACTOR shall give OWNER timely notice of readiness of the Work for all required inspections, tests, or approvals and shall cooperate with inspection and testing personnel to facilitate required inspections or tests.

B. OWNER shall employ and pay for the services of an independent testing laboratory to perform all inspections, tests, or approvals required by the Contract Documents except:

1. for inspections, tests, or approvals covered by paragraphs 11.03.C and 11.03.D below;

2. that costs incurred in connection with tests or inspections conducted pursuant to paragraph 11.04.B shall be paid as provided in said paragraph 11.04.B; and

3. as otherwise specifically provided in the Contract Documents.

C. If Laws or Regulations of any public body having jurisdiction require any Work (or part thereof) specifically to be inspected, tested, or approved by an employee or other representative of such public body, CONTRACTOR shall assume full responsibility for arranging and obtaining such inspections, tests, or approvals, pay all costs in connection therewith, and furnish OWNER the required certificates of inspection or approval.

D. CONTRACTOR shall be responsible for arranging and obtaining and shall pay all costs in connection with any inspections, tests, or approvals required for OWNER's acceptance of materials or equipment to be incorporated in the Work, or acceptance of materials, mix designs, or equipment submitted for approval prior to CONTRACTOR's purchase thereof for incorporation in the Work. Such inspections, tests, or approvals shall be performed by organizations acceptable to OWNER.

E. If any Work (or the work of others) that is to be inspected, tested, or approved is covered by CONTRACTOR without written concurrence of OWNER, it must, if requested by OWNER, be uncovered for observation.

F. Uncovering Work as provided in paragraph 11.03.E shall be at CONTRACTOR's expense unless CONTRACTOR has given OWNER timely notice of CONTRACTOR's intention to cover the same and OWNER has not acted with reasonable promptness in response to such notice.

11.04 *Uncovering Work*

A. If any Work is covered contrary to the written request of OWNER, it must, if requested by OWNER, be uncovered for OWNER's observation and replaced at CONTRACTOR's expense.

B. If OWNER considers it necessary or advisable that inspected covered Work be observed by OWNER, reinstalled or tested by others, CONTRACTOR, at OWNER's request, shall uncover, expose, or otherwise make available for observation, inspection, or testing as OWNER may require, that portion of the Work in question, furnishing all necessary labor, material, and equipment. If it is found that such Work is defective, CONTRACTOR shall pay all Claims, costs, losses, and damages (including but not limited to all fees and charges of engineers, architects, attorneys, and other professionals and all court or arbitration or other dispute resolution costs) arising out of or relating to such uncovering, exposure, observation, inspection, and testing, and of satisfactory replacement or reconstruction (including but not limited to all costs of repair or replacement of work of others); and OWNER shall be entitled to an appropriate decrease in the Contract Price. If the parties are unable to agree as to the amount thereof, OWNER may make a Claim therefor as provided in Article 9. If, however, such Work is not found to be defective, CONTRACTOR shall be allowed an increase in the Contract Price or an extension of the Contract Times, or both, directly attributable to such uncovering, exposure, observation, inspection, testing, replacement, and reconstruction. If the parties are unable to agree as to the amount or extent thereof, CONTRACTOR may make a Claim therefor as provided in Article 9.

11.05 *OWNER May Stop the Work*

A. If the Work is defective, or CONTRACTOR fails to supply sufficiently skilled workers or suitable materials or equipment, or fails to perform the Work in such a way that the completed Work will conform to the Contract Documents, OWNER may order CONTRACTOR to stop the Work or any portion thereof, until the cause for such order has been eliminated. The right of OWNER, however, to stop the Work shall not give rise to any duty on the part of OWNER to exercise this right for the benefit of CONTRACTOR, any Subcontractor, any Supplier, any other individual or entity, or any surety for,employee or agent of any of them.

11.06 *Correction or Removal of Defective Work*

A. CONTRACTOR shall correct all defective Work, whether fabricated, installed, or completed, or, if the Work has been rejected by OWNER, remove it from the Project and replace it with Work that is not defective. CONTRACTOR shall pay all Claims, costs, losses, and damages (including but not limited to all fees and charges of engineers, architects, attorneys, and other professionals and all court or arbitration or other dispute resolution costs) arising out of or relating to such correction or removal, including, but not limited to, all costs of repair or replacement of work of others.

11.07 *Correction Period*

A. If, within two years after the date of Substantial Completion or such longer period of time as may be prescribed by Laws or Regulations, the terms of any applicable special guarantee required by or specific provision stated in the Contract Documents , any Work, material, or equipment is found to be defective, or if the repair of any damages to the land or areas made available for CONTRACTOR's use by OWNER or permitted by Laws and Regulations as contemplated in paragraph 6.11.A is found to be defective, CONTRACTOR shall promptly, without cost to OWNER and in accordance with OWNER's written instructions, perform one to more of the following remedial actions: (i) repair such defective land or areas; (ii) correct such defective Work or, if the defective Work has been rejected by OWNER, remove it from the Project and replace it with Work that is not defective; or (iii) satisfactorily correct or repair or remove and replace any damage to other Work, to the work of others or other land or areas resulting therefrom. If CONTRACTOR does not promptly comply with the terms of such instructions or, in an emergency where delay would cause serious risk of loss or damage, OWNER may perform or have a third party perform the required remedial actions, and CONTRACTOR shall pay all Claims, costs, losses, and damages, including, but not limited to, all fees and charges of engineers, architects, attorneys, and other professionals and all court or arbitration or other dispute resolution costs arising out of or relating to the performance of said remedial action.

B. In special circumstances where a particular item of equipment is placed in continuous service before Substantial Completion of all the Work, the correction period for that item may start to run from an earlier date if so provided in the Specifications or by Written Amendment.

C. Where defective Work and damage to other Work resulting therefrom has been corrected or removed and replaced under this paragraph 11.07, the correction period hereunder with respect to such Work will be extended for an additional period of one year after such correction or removal and replacement has been satisfactorily completed.

D. CONTRACTOR's obligations under this paragraph 11.07 are in addition to any other obligation or warranty. The provisions of this paragraph 11.07 shall not be construed as a substitute for or a waiver of the provisions of any applicable statute of limitation or repose.

11.08 *Acceptance of Defective Work*

A. If, instead of requiring correction or removal and replacement of defective Work, OWNER prefers to accept it, OWNER may do so. CONTRACTOR shall pay all Claims, costs, losses, and damages (including but not limited to all fees and charges of engineers, architects, attorneys, and other professionals and all court or arbitration or other dispute resolution costs) attributable to OWNER's evaluation of and determination to accept such defective Work and the diminished value of the Work to the extent not otherwise paid by CONTRACTOR pursuant to this sentence. If any such acceptance occurs prior to final payment, a Change Order will be issued incorporating the necessary revisions in the Contract Documents with respect to the Work, and OWNER shall be entitled to an appropriate decrease in the Contract Price, reflecting the diminished value of Work so accepted. If the parties are unable to agree as to the amount thereof, OWNER may make a Claim therefor as provided in Article 9. If the acceptance occurs after final payment, an appropriate amount will be paid by CONTRACTOR to OWNER.

11.09 *OWNER May Correct Defective Work*

A. If CONTRACTOR fails within a reasonable time after written notice from OWNER to correct defective Work or to remove and replace rejected Work as required by OWNER in accordance with paragraph 11.06.A, or if CONTRACTOR fails to perform the Work in accordance with the Contract Documents, or if CONTRACTOR fails to comply with any other provision of the Contract Documents, OWNER may, after seven days written notice to CONTRACTOR, correct and remedy any such deficiency.

B. In exercising the rights and remedies under this section, OWNER shall proceed expeditiously. In connection with such corrective and remedial action, OWNER may exclude CONTRACTOR from all or part of the Site, take possession of all or part of the Work and suspend CONTRACTOR's services related thereto, take possession of CONTRACTOR's tools, appliances, construction equipment and machinery at the Site, and incorporate in the Work all materials and equipment stored at the Site or for which OWNER has paid CONTRACTOR but which are stored elsewhere. CONTRACTOR shall allow OWNER, OWNER's representatives, agents and employees, and OWNER's other contractors access to the Site to enable OWNER to exercise the rights and remedies under this section.

C. All Claims, costs, losses, and damages (including but not limited to all fees and charges of engineers, architects, attorneys, and other professionals and all court or arbitration or other dispute resolution costs) incurred or sustained by OWNER in exercising the rights and remedies under this paragraph 11.09 will be charged against CONTRACTOR, and a Change Order will be issued incorporating the necessary revisions in the Contract Documents with respect to the Work; and OWNER shall be entitled to an appropriate decrease in the Contract Price. If the parties are unable to agree as to the amount of the adjustment, OWNER may make a Claim therefor as provided in Article 9. Such claims, costs, losses and damages will include, but not be limited to, all costs of repair, or replacement of work of others destroyed or damaged by correction, removal, or replacement of CONTRACTOR's defective Work.

D. CONTRACTOR shall not be allowed an extension of the Contract Times because of any delay in the performance of the Work attributable to the exercise by OWNER of OWNER's rights and remedies under this section 11.09.

ARTICLE 12 - PAYMENTS TO CONTRACTOR AND COMPLETION

12.01 *Schedule of Values*

A. The schedule of values established pursuant to paragraph 2.07.A will serve as the basis for progress payments and will be incorporated into a form of Application for Payment acceptable to OWNER. Progress payments on account of Unit Price Work will be based on the number of units completed.

12.02 *Progress Payments*

A. *Applications for Payments*

1. At least 20 days before the date established for each progress payment, but not more often than once a month, CONTRACTOR shall submit to OWNER for review an Application for Payment filled out and signed by CONTRACTOR covering the Work completed as of the date of the Application and accompanied by such supporting documentation required by the Contract Documents. If payment is requested on the basis of materials and equipment not incorporated in the Work but delivered and suitably stored at the Site or at another location agreed to in writing, the Application for Payment shall also be accompanied by a bill of sale, invoice, or other documentation warranting that OWNER has received the materials and equipment free and clear of all Liens and evidence that the materials and equipment are covered by appropriate property insurance or other arrangements to protect OWNER's interest therein, all of which must be satisfactory to OWNER.

2. Beginning with the second Application for Payment, each Application shall include an affidavit of CONTRACTOR stating that all previous progress payments received on account of the Work have been applied on account to discharge CONTRACTOR's legitimate obligations associated with prior Applications for Payment.

3. The amount of retainage with respect to progress payments will be as stipulated in the Agreement.

B. *Review of Applications*

1. OWNER will, within 10 days after receipt of each Application for Payment, indicate in writing acceptance or denial of the Application for Payment. If the Application is denied, OWNER shall state the reasons for such denial and CONTRACTOR may make the necessary corrections and resubmit the Application.

2. Payment by OWNER of amount requested in an Application for Payment will constitute a representation by OWNER that to the best of OWNER's knowledge, information and belief:

.

a. the Work has progressed to the point indicated;

b. the quality of the Work is generally in accordance with the Contract Documents subject to: (i) an evaluation of the Work as a functioning whole prior to or upon Substantial Completion, (ii) the results of any subsequent tests called for in the Contract Documents, (iii) a final determination of quantities and classifications for Unit Price Work under Article 9, and (iv) any other qualifications stated in the recommendation; and

c. the conditions precedent to CONTRACTOR's entitlement to such payment appear to have been fulfilled in so far as it is OWNER's responsibility to observe the Work.

3. By making any such payment OWNER will not thereby be deemed to have accepted that: (i) inspections made to check the quality or the quantity of the Work as it has been performed have been exhaustive, extended to every aspect of the Work in progress, or involved detailed inspections of the Work, or (ii) that there may not be other matters or issues between the parties that might entitle CONTRACTOR to be paid additionally by OWNER or entitle OWNER to withhold payment to CONTRACTOR.

4. Neither OWNER's review of CONTRACTOR's Work for the purposes of making payments, including Final Payment, will impose responsibility on OWNER to supervise, direct, or control the Work or for the means, methods, techniques, sequences, or procedures of construction, or the safety precautions and programs incident thereto, or for CONTRACTOR's failure to comply with Laws and Regulations applicable to CONTRACTOR's performance of the Work. Additionally, said review or recommendation will not impose responsibility on OWNER to make any examination to ascertain how or for what purposes CONTRACTOR has used the moneys paid on account of the Contract Price, or to determine that title to any of the Work, materials, or equipment has passed to OWNER free and clear of any Liens.

5. OWNER may, because of subsequently discovered evidence or the results of subsequent inspections or tests, revise or revoke any such payment recommendation previously made to such extent as may be necessary to protect OWNER from loss because:

a. the Work is defective, or completed Work has been damaged, requires correction or replacement;

b. the Contract Price has been reduced by Written Amendment or Change Orders;

c. OWNER has been required to correct defective Work or complete Work in accordance with paragraph 11.09; or

d. OWNER has actual knowledge of the occurrence of any of the events enumerated in paragraph 13.02.A.

C. *Payment Becomes Due*

1. Twenty days after presentation of the Application for Payment to OWNER, the amount will become due, subject to the provisions of paragraph 12.02.D, and when due will be paid by OWNER to CONTRACTOR.

D. *Reduction in Payment*

1. OWNER may refuse to make payment of the full amount because:

a. claims have been made against OWNER arising from CONTRACTOR's performance or furnishing of the Work;

b. Liens have been filed in connection with the Work, except where CONTRACTOR has delivered a specific Bond satisfactory to OWNER to secure the satisfaction and discharge of such Liens;

c. there are other items entitling OWNER to a set-off against the amount requested; or

d. OWNER has actual knowledge of the occurrence of any of the events enumerated in paragraphs 12.02.B.5.a through 12.02.B.5.c or paragraph 13.02.A.

2. If OWNER refuses to make payment of the full amount, OWNER must give CONTRACTOR immediate written notice stating the reasons for such action and promptly pay CONTRACTOR any amount remaining after deduction of the amount so withheld. OWNER shall promptly pay CONTRACTOR the amount so withheld or any adjustment thereto agreed to by OWNER and CONTRACTOR, when CONTRACTOR corrects to OWNER's satisfaction the reasons for such action.

3. If it is subsequently determined that OWNER's refusal of payment was not justified, the amount wrongfully withheld shall be treated as an amount due as determined by paragraph 12.02.C.1.

12.03 *CONTRACTOR's Warranty of Title*

A. CONTRACTOR warrants and guarantees that title to all Work, materials, and equipment covered by any Application for Payment, whether incorporated in the Project or not, will pass to OWNER no later than the time of payment, free and clear of all Liens.

12.04 *Substantial Completion*

A. When CONTRACTOR considers the entire Work ready for its intended use, CONTRACTOR shall notify OWNER in writing that the entire Work is substantially complete (except for items specifically listed by CONTRACTOR as incomplete) and request that OWNER issue a certificate of Substantial Completion.

B. Promptly thereafter, OWNER and CONTRACTOR shall make an inspection of the Work to determine the status of completion. If OWNER does not consider the Work substantially complete, OWNER will notify CONTRACTOR in writing, giving the reasons therefor.

C. If OWNER considers the Work substantially complete, OWNER will prepare a tentative certificate of Substantial Completion which shall fix the date of Substantial Completion and will issue a final certificate of Substantial Completion. There shall be attached to the certificate a tentative list of items to be completed or corrected before final payment.

D. OWNER shall have the right to exclude CONTRACTOR from the Site after the date of Substantial Completion, but OWNER shall allow CONTRACTOR reasonable access to complete or correct items on the tentative list.

12.05 *Partial Utilization*

A. Use by OWNER at OWNER's option of any substantially completed part of the Work which has specifically been identified in the Contract Documents, or which OWNER and CONTRACTOR agree constitutes a separately functioning and usable part of the Work that can be used by OWNER for its intended purpose without significant interference with CONTRACTOR's performance of the remainder of the Work, may be accomplished prior to Substantial Completion of all the Work subject to the following conditions:

1. OWNER at any time may request, at any time and in writing, that CONTRACTOR permit OWNER to use any such part of the Work which OWNER believes to be ready for its intended use and substantially complete. If CONTRACTOR agrees that such part of the Work is substantially complete, CONTRACTOR will certify to OWNER that such part of the Work is substantially complete and request OWNER to issue a certificate of Substantial Completion for that part of the Work. CONTRACTOR at any time may notify OWNER in writing that CONTRACTOR considers any such part of the Work ready for its intended use and substantially complete and request OWNER to issue a certificate of Substantial Completion for that part of the Work. Within a reasonable time after either such request, OWNER and CONTRACTOR shall make an inspection of that part of the Work to determine its status of completion. If OWNER does not consider that part of the Work to be substantially complete, OWNER will notify CONTRACTOR in writing giving the reasons therefor. If OWNER considers that part of the Work to be substantially complete, the provisions of section 12.04 will apply with respect to certification of Substantial Completion of that part of the Work and the division of responsibility in respect thereof and access thereto.

12.06 *Final Inspection*

A. Upon written notice from CONTRACTOR that the entire Work or an agreed portion thereof is complete, OWNER will promptly make a final inspection with CONTRACTOR and will notify CONTRACTOR in writing of all particulars in which this inspection reveals that the Work is incomplete or defective. CONTRACTOR shall immediately take such measures as are necessary to complete such Work or remedy such deficiencies.

12.07 *Final Payment*

A. *Application for Payment*

1. After CONTRACTOR has, in the opinion of OWNER, satisfactorily completed all corrections identified during the final inspection and has delivered, in accordance with the Contract Documents, all maintenance and operating instructions, schedules, guarantees, Bonds, certificates or other evidence of insurance certificates of inspection, marked-up record documents (as provided in paragraph 6.12), and any other necessary

documents, CONTRACTOR may make application for final payment following the procedure for progress payments.

2. The final Application for Payment shall be accompanied by the following, unless previously delivered: (i) all documentation called for in the Contract Documents, including but not limited to the evidence of insurance required by subparagraph 5.04.B.7; (ii) consent of the surety, if any, to final payment; and (iii) complete and legally effective releases or waivers satisfactory to OWNER of all Lien rights arising out of or Liens filed in connection with the Work.

3. In lieu of the releases or waivers of Liens specified in paragraph 12.07.A.2 and as approved by OWNER, CONTRACTOR may furnish receipts or releases in full and an affidavit of CONTRACTOR that: (i) the releases and receipts include all labor, services, material, and equipment for which a Lien could be filed and (ii) all payrolls, material and equipment bills, and other indebtedness connected with the Work for which OWNER or OWNER's property might in any way be responsible have been paid or otherwise satisfied. If any Subcontractor or Supplier fails to furnish a release or receipt of payment in full, CONTRACTOR may furnish a Bond or other collateral satisfactory to OWNER to indemnify OWNER against any Lien.

B. *Review of Application and Acceptance*

1. If, on the basis of OWNER's observation of the Work during construction and final inspection, and OWNER's review of the final Application for Payment and accompanying documentation as required by the Contract Documents, OWNER is satisfied that the Work has been completed and CONTRACTOR's other obligations under the Contract Documents have been fulfilled, OWNER will, within ten days after receipt of the final complete Application for Payment, indicate in writing to CONTRACTOR that the Work is acceptable subject to the provisions of paragraph 12.09.OWNER will otherwise return the Application for Payment to CONTRACTOR, indicating in writing the reasons for refusing to recommend final payment, in which case CONTRACTOR shall make the necessary corrections and resubmit the Application for Payment.

C. *Payment Becomes Due*

1. Thirty days after the formal acceptance of the Work by OWNER, retainage will become due and payable.

12.08 *Final Completion Delayed*

A. If final completion of the Work is significantly delayed through no fault of CONTRACTOR, OWNER may, upon receipt of CONTRACTOR's final Application for Payment, and without terminating the Agreement, make payment of the balance due for that portion of the Work fully completed and accepted. If the remaining balance to be held by OWNER for Work not fully completed or corrected is less than the retainage stipulated in the Agreement, and if Bonds have been furnished as required in paragraph 5.01, the written consent of the surety to the payment of the balance due for that portion of the Work fully completed and accepted shall be submitted by CONTRACTOR to OWNER with the Application for such payment. Such payment shall be made under the terms and conditions governing final payment, except that it shall not constitute a waiver of Claims.

12.09 *Waiver of Claims*

A. The making and acceptance of final payment will constitute a waiver of all Claims:

1. by OWNER against CONTRACTOR, except Claims arising from unsettled Liens, from defective Work appearing after final inspection pursuant to paragraph 12.06, from failure to comply with the Contract Documents or the terms of any special guarantees specified therein, or from CONTRACTOR's continuing obligations under the Contract Documents; and

2. by CONTRACTOR against OWNER other than those previously made in writing which are still unsettled.

ARTICLE 13 - SUSPENSION OF WORK AND TERMINATION

13.01 *OWNER May Terminate for Cause*

A. The occurrence of any one or more of the following events will justify termination of the Contract for cause:

1. CONTRACTOR's persistent failure to perform the Work in accordance with the Contract Documents, including, but not limited to, failure to supply sufficient skilled workers or suitable materials or equipment or failure to adhere to the progress schedule established under paragraph 2.07 as adjusted from time to time pursuant to paragraph 6.04;

2. CONTRACTOR's disregard of Laws or Regulations of any public body having jurisdiction;

3. CONTRACTOR's disregard of the authority of OWNER; or

4. CONTRACTOR's violation in any substantial way of any provisions of the Contract Documents.

B. If one or more of the events identified in paragraph 13.01.A occur, OWNER may, after giving CONTRACTOR and the surety, if any, seven days written notice, terminate the services of CONTRACTOR, exclude CONTRACTOR from the Site, and take possession of the Work and of all CONTRACTOR's tools, appliances, construction equipment, and machinery at the Site, and use the same to the full extent they could be used by CONTRACTOR without liability to CONTRACTOR for trespass or conversion, incorporate in the Work all materials and equipment stored at the Site or for which OWNER has paid CONTRACTOR but which are stored elsewhere, and finish the Work as OWNER may deem expedient. In such case, CONTRACTOR shall not be entitled to receive any further payment until the Work is finished. If the unpaid balance of the Contract Price exceeds all claims, costs, losses, and damages, including, but not limited to, all fees and charges of engineers, architects, attorneys, and other professionals and all court or arbitration or other dispute resolution costs sustained by OWNER arising out of or relating to completing the Work, such excess will be paid to

CONTRACTOR. If such claims, costs, losses, and damages exceed such unpaid balance, CONTRACTOR shall pay the difference to OWNER. Such claims, costs, losses, and damages incurred by OWNER will be incorporated in a Change Order. When exercising any rights or remedies under this paragraph OWNER shall not be required to obtain the lowest price for the Work performed.

C. Where CONTRACTOR's services have been so terminated by OWNER, the termination will not affect any rights or remedies of OWNER against CONTRACTOR then existing or which may thereafter accrue. Any retention or payment of moneys due CONTRACTOR by OWNER will not release CONTRACTOR from liability.

13.02 *OWNER May Terminate For Convenience*

A. Upon seven days written notice to CONTRACTOR, OWNER may, without cause and without prejudice to any other right or remedy of OWNER, elect to terminate the Contract. In such case, CONTRACTOR shall be paid, without duplication of any items:

1. for completed and acceptable Work executed in accordance with the Contract Documents prior to the effective date of termination, including fair and reasonable sums for overhead and profit on such Work;

2. for expenses sustained prior to the effective date of termination in performing services and furnishing labor, materials, or equipment as required by the Contract Documents in connection with uncompleted Work, plus fair and reasonable sums for overhead and profit on such expenses;

3. for all claims, costs, losses, and damages including, but not limited to, all fees and charges of engineers, architects, attorneys, and other professionals and all court or arbitration or other dispute resolution costs incurred in settlement of terminated contracts with Subcontractors, Suppliers, and others; and

4. for reasonable expenses directly attributable to termination.

B. CONTRACTOR shall not be paid on account of loss of anticipated profits or revenue or other economic loss arising out of or resulting from such termination.

13.03 *CONTRACTOR May Stop Work or Terminate*

A. If, through no act or fault of CONTRACTOR, the Work is suspended for more than 90 consecutive days by OWNER or under an order of court or other public authority, or OWNER fails to act on any Application for Payment within 30 days after it is submitted, or OWNER fails for 30 days to pay CONTRACTOR any sum finally determined to be due, then CONTRACTOR may, upon seven days written notice to OWNER and provided OWNER does not remedy such suspension or failure within that time, terminate the Contract and recover from OWNER payment on the same terms as provided in section 13.02. In lieu of terminating the Contract and without prejudice to any other right or remedy, if OWNER has failed for 30 days to pay CONTRACTOR any sum finally determined to be due, CONTRACTOR may, seven days after providing written notice to OWNER, stop the Work until payment is made of all such amounts due CONTRACTOR, including interest thereon. The provisions of this section 13.03 are not intended to preclude CONTRACTOR from making a Claim under Article 9 for an adjustment in Contract Price or Contract Times or otherwise for expenses or damage directly attributable to CONTRACTOR's stopping the Work as permitted by this paragraph.

ARTICLE 14 - DISPUTE RESOLUTION

14.01 *Methods and Procedures*

A. OWNER and CONTRACTOR may exercise such rights or remedies as either may otherwise have under the Contract Documents or by Laws or Regulations in respect of any dispute. Disputes shall be resolved by legal or equitable proceedings in a court of appropriate jurisdiction. Under no circumstances shall binding arbitration be required as to any dispute arising between the parties or under the Contract Documents.

ARTICLE 15 - MISCELLANEOUS

15.01 *Giving Notice*

A. Whenever any provision of the Contract Documents requires the giving of written notice, it will be deemed to have been validly given if delivered in person to the individual or to a member of the firm or to an officer of the corporation for whom it is intended, or if delivered at or sent by ordinary mail, postage prepaid, to the last business address known to the giver of the notice.

15.02 *Computation of Times*

A. When any period of time is referred to in the Contract Documents by days, it will be computed to exclude the first and include the last day of such period. If the last day of any such period falls on a Saturday or Sunday or on a day made a legal holiday by the law of the applicable jurisdiction, such day will be omitted from the computation.

15.03 *Cumulative Remedies*

A. The duties and obligations imposed by these General Conditions and the rights and remedies available hereunder to the parties hereto are in addition to, and are not to be construed in any way as a limitation of, any rights and remedies available to any or all of them which are otherwise imposed or available by Laws or Regulations, by special warranty or guarantee, or by other provisions of the Contract Documents, and the provisions of this paragraph will be as effective as if repeated specifically in the Contract Documents in connection with each particular duty, obligation, right, and remedy to which they apply.

15.04 *Survival of Obligations*

A. All representations, indemnifications, warranties, and guarantees made in, required by, or given in accordance with the Contract Documents, as well as all continuing obligations indicated in the Contract Documents, will survive final payment, completion, and acceptance of the Work or termination or completion of the Agreement.

15.05 *Controlling Law*

A. This Contract is to be governed by the laws of the State of Iowa.

15.06 *Compliance with OSHA Regulations*

A. CONTRACTOR and all Subcontractors shall comply with the requirements of 29 CFR 1910 (General Industry Standard) and 29 CFR 1926 (Construction Industry Standard). CONTRACTOR and all Subcontractors are solely responsible for compliance with said regulations.

15.07 *Employment Practices*

A. Neither CONTRACTOR nor its Subcontractors shall employ any person whose physical or mental condition is such that its employment will endanger the health and safety of themselves or others employed on the Project.

B. CONTRACTOR shall not commit any of the following employment practices and agrees to include the following clauses in any subcontracts:

1. To discharge from employment or refuse to hire any individual because of sex, race, color, religion, national origin, sexual orientation, gender identity, marital status, age, or disability unless such disability is related to the job performance of such performance or employee.

2. To discriminate against any individual in terms, conditions, or privileges of employment because of sex, race, color, religion, national origin, sexual orientation, gender identity, marital status, age or disability unless such disability is related to job performance of such person or employee.

15.08 *Contract Compliance Program (Anti-Discrimination Requirements).*

A. For all Contracts and subcontracts of $25,000 or more, CONTRACTOR and all affected Subcontractors shall abide by the requirements of the City of Iowa City Contract Compliance Program, which is included with these Specifications beginning on page CC-1.

15.09 *Restriction on Non-Resident Bidding of Non-Federal Aid Projects*

A. CONTRACTOR awarded the Project, together with all Subcontractors, shall be required to complete the form included with these Specifications titled the same as this section and submit it to OWNER before work can begin on the Project. Note that this requirement involves only those projects not funded with Federal moneys.

15.10 *Construction Stakes*

A. CONTRACTOR shall be responsible for the preservation of stakes and marks. Any necessary restaking will be at CONTRACTOR's expense and will be charged at a rate of $75 per hour.

*****

CITY OF IOWA CITY
SUPPLEMENTARY CONDITIONS

These Supplementary Conditions amend or supplement the City of Iowa City General Conditions of the Construction Contract and other provisions of the Contract Documents as indicated below. All provisions which are not so amended or supplemented remain in full force and effect.

Terms used in these Supplementary Conditions will have meanings assigned to them in the General Conditions. Additional terms used in these Supplementary Conditions have the meanings indicated below, which are applicable to both the singular and plural thereof.

SC-2.02 COPIES OF DOCUMENTS

A. After Notice of Award, CONTRACTOR may obtain from the OWNER, at no charge, maximum of five (5) complete sets of the Drawings and Specifications.

SC-5.01 BONDS AND INSURANCE

Delete paragraph 5.01.A. of the General Conditions in its entirety and insert the following in its place:

A. CONTRACTOR shall furnish performance and payment Bonds, each in an amount at least equal to the Contract Price as security for the faithful performance and payment of all CONTRACTOR's obligations under the Contract Documents. These Bonds shall remain in effect at least until two years after the date when final payment becomes due, except as provided otherwise by Laws or Regulations or by the Contract Documents. CONTRACTOR shall also furnish such other Bonds as are required by the Contract Documents.

SC-5.04 CONTRACTOR's LIABILITY INSURANCE

The limits of liability for the insurance shall provide coverage for not less than the following amounts or greater where required by Laws and Regulations:

1. Workers' Compensation, and related coverages:

a.	State:	Statutory
b.	Applicable Federal (e.g., Longshoreman's):	Statutory
c.	Employer's Liability:	$1,000,000

1. 2. CONTRACTOR's General Liability which shall include completed operations and product liability coverages:

a.	General Aggregate	$2,000,000
b.	Products--Completed Operations Aggregate	$2,000,000
c.	Personal and Advertising Injury	$1,000,000
d.	Each Occurrence (Bodily Injury and Property Damage)	$1,000,000

e. Property Damage liability insurance will provide Explosion, Collapse and Underground coverages where applicable.

f. Excess or Umbrella Liability:

General Aggregate	$1,000,000
Each Occurrence	$1,000,000

3. Automobile Liability:

a. Bodily injury and Property Damage:

Single Combined Limit	$1,000,000

In addition, CONTRACTOR shall be required to comply with the following provisions with respect to insurance coverage:

The entire amount of CONTRACTOR's liability insurance policy coverage limits, identified in the policy and in the Certificate of Insurance, must, under the policy, be available to pay damages for which the insured CONTRACTOR becomes liable, or for which the insured assumes liability under the indemnity agreement herein contained, and such coverage amount shall not be subject to reduction or set off by virtue of investigation or defense costs incurred by CONTRACTOR's insurer.

The entire amount of CONTRACTOR's liability insurance policy coverage limits shall be payable by CONTRACTOR's insurer, with no deductible to be paid by, or self-insured retention to be attributed to, CONTRACTOR unless this requirement is waived by OWNER. CONTRACTOR's Certificate of Insurance must set forth the nature and amount of any such deductible or self-insured retention.

If CONTRACTOR's liability insurance coverage is subject to any special exclusions or limitations not common to the type of coverage being provided, such exclusions or limitations shall be noted on the Certificate of Insurance.

CONTRACTOR'S General Liability, Auto Liability and Workers' Compensation insurance shall be endorsed with the Governmental Immunities Endorsement (see attached copy) and Waiver of Subrogation in favor of the OWNER. CONTRACTOR'S Workers' Compensation insurance shall also be endorsed with the Alternate Employer endorsement naming the OWNER as the Alternate Employer. .

The OWNER requires that the CONTRACTOR'S Insurance carrier be A rated or better by A.M. Best.

CONTRACTOR shall provide OWNER with "occurrence form" liability insurance coverage.

OWNER reserves the right to waive any of the insurance requirements herein provided. OWNER also reserves the right to reject CONTRACTOR's insurance if not in compliance with the requirements herein provided, and on that basis to either award the contract to the next low bidder, or declare a default and seek specific performance or termination, as the case may be.

In the event that any of the policies of insurance or insurance coverage identified on CONTRACTOR's Certificate of Insurance are cancelled or modified, or in the event that CONTRACTOR incurs liability losses, either due to activities under this Contract, or due to other activities not under this Contract but covered by the same insurance, and such losses exhaust the aggregate limits of CONTRACTOR's liability insurance, then OWNER may, in its discretion, either suspend CONTRACTOR's operations or activities under this Contract, or terminate this Contract, and withhold payment for Work performed on the Contract.

SC-6.06.B. CONCERNING SUBCONTRACTORS, SUPPLIERS, AND OTHERS

CONTRACTOR shall list those persons, firms, companies or other parties to whom it proposes/intends to enter into a subcontract regarding this Project as required on the Bid Form and the Agreement. Such identification will not be made public at the bid opening. If no minority business enterprises (MBE) are utilized,

CONTRACTOR shall furnish documentation of all efforts to recruit MBE's. OWNER's acceptance (either in writing or by failing to make written objection thereto by the date indicated for acceptance or objection in the Bidding Documents or the Contract Documents) of any such Subcontractor, Supplier, or other individual or entity so identified may be revoked on the basis of reasonable objection after due investigation. CONTRACTOR shall submit and acceptable replacement for the rejected Subcontractor, Supplier or other individual or entity, and the Contract Price will be adjusted by the difference in the cost occasioned by such replacement, and an appropriated Change Order will be issued or Written Amendment signed. No acceptance by OWNER of any such Subcontractor, Supplier, or other individual or entity, whether initially or as a replacement, shall constitute a waiver of any right of OWNER to reject defective Work.

SC-15.10 CONSTRUCTION STAKES

Delete section 15.10.A. of the General Conditions in its entirety.

SC-15.11 OWNER'S SAFETY PROGRAM

A. CONTRACTOR and any Subcontractor or Supplier or other individual or entity performing or furnishing any of the Work at the Site shall complete a Contractor Orientation Program. This program is in response to OSHA regulation 29 CFR 1926 Subpart-C. This program is designed to inform you and your company's staff of hazards present associated with work on sanitary sewer lines or at Wastewater Division treatment facilities. See the attached Contractor Orientation Program document for more information.

END OF SUPPLEMENTARY CONDITIONS

CITY OF IOWA CITY
MEMORANDUM

Date**:** November 19, 2010

To**:** Contractors, Vendors and Manufacture Representatives

From**:** City of Iowa City Wastewater Division

Re**:** Contractors Orientation Program

Purpose:
The purpose of the Contractors Orientation Program (COP) is to orient the contractor's staff of on site safety concerns during construction projects and to comply with OSHA regulation 29 CFR 1926 Subpart-C. This orientation program has been developed regarding operational and safety issues specifically at the City of Iowa City Wastewater Treatment Division. The orientation includes such information as infection control, smoking restrictions, hazardous locations, evacuation requirements, among other topics. The orientation outline and contents are available to review in the main administration building at the South Wastewater Plant.

Policy:
All who are providing construction, vendor, or manufacture representative services for the City of Iowa City Wastewater Treatment Division and will not be accompanied by plant or sewer maintenance staff shall be required to complete the COP course. All services awarded either by a bidding process, yearly maintenance contracts or emergency repair including but not limited to: alterations, repairs including painting, equipment replacement, equipment calibrations, and sanitary sewer pipe repair or replacement in streets or alleys require completion of the COP course.

Additional service work which may require completion of the Contractors Orientation Program includes but is not limited to the following:

- Repair or maintenance of building HVAC systems.
- Vibration and noise evaluations of plant buildings.
- Service work to public utilities (electric, gas or telephone).
- Water main testing, flushing, repair or maintenance.
- Manufacturer representatives completing equipment service or repairs.

Expectations:
All who are providing services as previously defined shall complete the COP course. Kirkwood Community College at the Iowa City or Cedar Rapids campuses will administer this course for the City of Iowa City Wastewater Division. The COP course is computer based training. After completing the Contactor Orientation Program, Kirkwood will issue a photo identification badge specific to the City of Iowa City Wastewater Division. Enclosed are copies of required forms and contact information for Kirkwood campuses.

- The photo identification badge is required to be worn while on site at the Iowa City Wastewater Treatment Plants.
- Construction service workers who have not completed the COP course will not be permitted to provide services for the City of Iowa City Wastewater Division.
- The contractor will insure their staff has completed the COP course prior to dispatching them to work at the Iowa City Wastewater Treatment Division.
- Completion of the COP course and payment to Kirkwood at $35.00 per is the contractor's responsibility. Payment due at time of scheduling.
- The Wastewater Division project coordinator will verify that each worker has a photo identification badge while on the job site.
- The City of Iowa City Wastewater Division Contractors Orientation Program must be completed once every two (2) years.

CITY OF IOWA CITY
410 East Washington Street
Iowa City, Iowa 52240-1826
(319) 356-5000
(319) 356-5009 FAX
www.icgov.org

November 19, 2010

Re: Contractor Orientation Program

The City of Iowa City Wastewater Division will now require contractors, venders and manufacturer representatives to complete a Contractor Orientation Program. This program is in response to OSHA regulation 29 CFR 1926 Subpart-C. This program is designed to inform you and your company's staff of hazards present associated with work on sanitary sewer lines or at Wastewater Division treatment facilities.

Enclosed you will find copies of the following:

- The City of Iowa City Wastewater Division, Contractor Orientation Program policy.
- Iowa City Location, Registration and Rules
- CVCSC Training Center Rules. (needs to be copied and taken to testing center)
- Employee Personal Information Form (need to complete one form for each employee taking the program)
- Kirkwood requires payment by the employee or employer prior to completing the Contractor Orientation Program.

If you have any questions regarding the Contractor Orientation Program please contact me at 319-356-5170 ext. 6104 between 7:00 am and 4:00 pm Monday through Friday or you can E-mail me at chris-gilstrap@iowa-city.org

Sincerely,

Chris D. Gilstrap

Chris D. Gilstrap
Assistant Superintendent
City of Iowa City
Wastewater Division

Cedar Valley Contractor's Safety Council

Iowa City Location

REGISTRATION AND RULES

REGISTRATION INFORMATION:

Kirkwood Cedar Rapids or Iowa City Locations
To register and reserve a time-slot call:
Roxanne Foley @ 319.398.7783
E-mail: Roxann.Foley@kirkwood.edu
Hours of operation:
Cedar Rapids Testing Facility: Monday to Friday 7:00 am to 5:00 pm
Iowa City Testing Facility: Monday to Friday 9:00 am to 12:00 pm
Payment of $35.00 per person due at time of scheduling test.

Registrations are taken by appointment only. Space is limited.

TRAINING CENTER RULES

All students must read and understand the following rules. The Training Center is considered an extension of the work place and policy violations will not be tolerated.

I.D. Required

Students and the company or union hall registering them must give the students Social Security number. The student must also present a valid, legible, government issued, good condition that contains a recent, identifiable photograph. Acceptable forms of identification are: state drivers license, state I.D. card, U.S. Passport, current foreign passport, green card, U.S. Military or government photo I.D.

English Language

CVCSC Training Center classes are offered in English only. Students must pass a test in English.

Cheating or Falsifying

Anyone falsifying identification or caught cheating will be barred for 1 year NO EXCEPTIONS!

Cleanliness

Attendees clothing and shoes must be free of dirt, mud, chemicals, dust, grease attendees will be asked to wash, change, or cover-up to avoid damage to the center or cross contamination of other attendees.

Personal Behavior

Foul, abusive or inappropriate language, attendees suspected of being under the influence of drugs or alcohol, and weapons will not be tolerated. Students ejected from the Training Center for personal behavior may register future classes consistence with the rules of the Training Center. However, second time offenders shall be permanently banned from future Training Center programs.

Harassment

No one will be permitted to harass others. Everyone has the responsibility to avoid action, implied, or explicit, which may suggest harassment in any form.

Tobacco

The use of tobacco is PROHIBITED inside the building, but smoking is allowed outside.

Cell Phones

Radios, Cell Phones, Pagers, must be off. If students need to be reached they may be called at the Training Center.

Unexcused Absence

If a student leaves a class prior to completion, she/he must notify the Training Center of leaving. Without a legitimate excuse, companies will be charged the full price for the student who leaves class after registration.

Passing/Failing a Course

Each course has a final test. The final CBT score is based on the number of questions asked (usually not more than 25) <80%. (Pass rate is 80%)
Students who score less than 80% on the final test will be allowed to retake the course the same day. A score less than 80% on the second try means that the student may NOT retake the course during the same calendar year.
When a student attains a passing score, the date of the successful training is recorded in the on-line database and a photo id is issued.

Badges

Students are given a photo ID as proof of a passing score. A failing score means that the training center cannot confirm minimum safety knowledge. Individual host companies decide whether a person who fails the class will be admitted to their facility. ID's will only be issued from the Iowa City Kirkwood Campus.

Signature: _____Date: _____

Cedar Valley Contractors Safety Council (CVCSC)

Personal Information Sheet **Date** _____

Name _____

Address _____ **City** _____

State _____ **Zip** _____

Social Security Number _____ **Home Phone** _____

Contractor/Company Information

Name _____

Address _____ **City** _____

State _____ **Zip** _____

Business Phone _____ **DOB** _____

Contact Name _____

Courses Billed

Cedar Rapids

- ☐ **Basic OSHA**
- ☐ **Alliant 6th**
- ☐ **Alliant Prairie Creek**
- ☐ **Cedar Rapids Paper (CRP)**
- ☐ **Diamond V Mills**
- ☐ **Genencor International**
- ☐ **Quality Chef**
- ☐ **Cedar Rapids Water Pollution**

Iowa City

- ☐ **U of I Hospitals**
- ☐ **City of IC - Wastewater**
- ☐ **City of IC - Water Department**
- ☐ **City of IC - Landfill**

CEDAR VALLEY CONTRACTOR SAFETY COUNCIL

Contractor Safety Orientation

Date:

Basic Safety # **Site Specific # City of Iowa City**

SIGN-IN SHEET

**** Site Specific Only**

STUDENT	S.S. NUMBER	COMPANY	BASIC P/F	SITE COURSE	SITE P/F	SIGNATURE

Technical Specifications

for

Wastewater Belt Filter Press Replacement Project

City of Iowa City
Iowa City, Iowa

I hereby certify that this engineering document was prepared by me or under my direct personal supervision and that I am a duly licensed Professional Engineer under the laws of the State of Iowa.

Jay M. Brady

Jay M. Brady 8/30/2017
(signature) (date)

Discipline: Civil Engineer, Iowa License No. 13153

License expires December 31, 2018.

Pages or sheets covered by this seal: As designated by JMB on Table of Contents

Stanley Consultants INC.

A Stanley Group Company
Engineering, Environmental and Construction Services - Worldwide

I hereby certify that this engineering document was prepared by me or under my direct personal supervision and that I am a duly licensed Professional Engineer under the laws of the State of Iowa.

Andrea L. Bickford

(signature) 08/30/2017 (date)

Discipline: Structural Engineer, Iowa License No. 20844

License expires December 31, 2017

Pages or sheets covered by this seal: As designated by ALB on Table of Contents

I hereby certify that this engineering document was prepared by me or under my direct personal supervision and that I am a duly licensed Professional Engineer under the laws of the State of Iowa.

Lane E. Ingram

(signature) 30AUG17 (date)

Discipline: Electrical Engineer, Iowa License No. 17368

License expires December 31, 2018.

Pages or sheets covered by this seal: As designated by LEI on Table of Contents

I hereby certify that this engineering document was prepared by me or under my direct personal supervision and that I am a duly licensed Professional Engineer under the laws of the State of Iowa.

Scott A. Warren

(signature) 8/30/17 (date)

Discipline: Instrumentation Engineer, Iowa License No. 21525

License expires December 31, 2018

Pages or sheets covered by this seal: As designated by SAW on Table of Contents

I hereby certify that this engineering document was prepared by me or under my direct personal supervision and that I am a duly licensed Professional Engineer under the laws of the State of Iowa.

Jon J. Bovenkamp

(signature) 8/30/17 (date)

Discipline: Mechanical Engineer, Iowa License No. 15551

License expires December 31, 2018.

Pages or sheets covered by this seal: As designated by JJB on Table of Contents

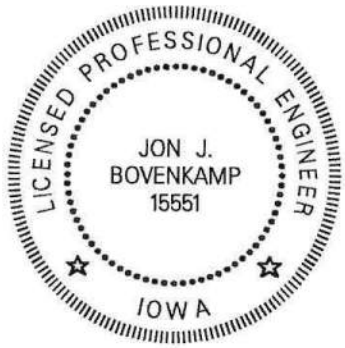

I hereby certify that the portion of this technical submission described below was prepared by me or under my direct supervision and responsible charge. I am a duly registered architect under the laws of the state of Iowa.

Chad Chamberlin

Signature

Pages or sheets covered by this seal: As designated by CMC on Table of Contents

Date Issued: 8/30/2017

BELT FILTER PRESS AND PUMP REPLACEMENTS
WASTEWATER TREATMENT FACILITY

CITY OF IOWA CITY
IOWA CITY, IOWA

SPECIFICATIONS GROUP

GENERAL REQUIREMENTS SUBGROUP

Resp. Charge	Section	Title	Page
DIVISION 01	GENERAL REQUIREMENTS		
JMB	01 11 00	Summary of Work	1 to 2
JMB	01 15 00	Work Sequence	1 to 3
JMB	01 20 00	Price and Payment Procedures	1 to 3
		Request for Information (RFI) Form	1
JMB	01 25 13	Product Substitutions Procedures	1 to 2
		Product Substitution Request Form	1
JMB	01 30 00	Administrative Requirements	1 to 4
JMB	01 33 00	Submittal Procedures	1 to 7
		Submittal Transmittal Form	1
JMB	01 40 00	Quality Requirements	1 to 5
JMB	01 43 33	Manufacturer's Field Services	1 to 2
ALB	01 45 33	Code Required Special Inspection and Procedures	1 to 5
		Statement of Special Inspections and Tests	1 to 4
JMB	01 50 00	Temporary Facilities and Controls	1 to 6
JMB	01 60 00	Product Requirements	1 to 4
JMB	01 70 00	Execution and Closeout Requirements	1 to 5
JMB	01 73 19	Installation Requirements	1 to 3
JMB	01 78 23	Operating and Maintenance Data	1 to 4
		Operating and Maintenance Manual Cover Diagram	1

FACILITY CONSTRUCTION SUBGROUP

DIVISION 02	EXISTING CONDITIONS		
JMB	02 41 00	Demolition	1 to 9
DIVISION 03	CONCRETE		
ALB	03 00 10	Concrete Work	1 to 10
DIVISION 05	METALS		
ALB	05 50 00	Metal Fabrications	1 to 5
DIVISION 08	OPENINGS		
CMC	08 30 00	Specialty Doors and Frames	1 to 3
CMC	08 41 13	Aluminum-Framed Entrances and Storefronts	1 to 3
CMC	08 80 00	Glazing	1 to 2
DIVISION 09	FINISHES		
JMB	09 96 00	High Performance Coatings	1 to 10
DIVISION 12	FURNISHINGS		
CMC	12 21 00	Window Blinds	1 to 2

Resp. Charge	Section	Title	Page
FACILITY SERVICES SUBGROUP			
DIVISION 20		FACILITY SERVICES	
JJB	20 05 00	Common Work Results for Facility Services Systems	1 to 4
JJB	20 05 13	Common Work Results for Facility Services Piping Pipe Class Specifications ACS6 - Type E or S Carbon Steel, ASME Class 125 ACU1 – Hard Drawn Copper, ASME Class 125 ADI1 – Ductile Iron ANSI/AWWA C151/A21.51 APE5 – PEX Tubing, 150 psi at 73°F ASS3 – CCST w/PE Jacket 5 psig at 150°F	1 to 8
JJB	20 05 29	Supports and Anchors for Facility Services Piping and Equipment	1 to 6
JJB	20 07 00	Mechanical Insulation M-1008	1 to 5
DIVISION 23		HEATING, VENTILATING, AND AIR CONDITIONING	
JJB	23 05 93	Testing, Adjusting, and Balancing for HVAC	1 to 6
JJB	23 31 00	HVAC Ducts and Casings	1 to 4
JJB	23 33 00	Air Duct Accessories	1 to 2
JJB	23 34 00	HVAC Fans	1 to 3
DIVISION 26		ELECTRICAL	
LEI	26 05 00	Common Work Results for Electrical	1 to 27
LEI	26 05 03	Small and Medium 3-Phase Motors	1 to 6
LEI	26 05 33	Above-Grade Raceway	1 to 6
LEI	26 29 23	Low-Voltage Variable Frequency Drives	1 to 8
SITE AND INFRASTRUCTURE SUBGROUP			
DIVISION 31		EARTHWORK	
JMB	31 22 18	Finish Grading	1 to 2
ALB	31 23 16-16	Structural Excavation and Backfill	1 to 4
DIVISION 32		EXTERIOR IMPROVEMENTS	
JMB	32 11 23	Aggregate Base Courses	1 to 2
JMB	32 13 13	Concrete Paving	1 to 5
JMB	32 16 23	Sidewalks	1 to 2
JMB	32 92 19	Seeding	1 to 5
PROCESS EQUIPMENT SUBGROUP			
DIVISION 40		PROCESS INTEGRATION	
SAW	40 05 00	Common Work Results for Process Systems	1 to 6
JJB	40 23 36	Wastewater Process Piping System	1 to 23
LEI	40 41 13	Process Pipe Electrical Heat Tracing	1 to 8
SAW	40 80 00	Commissioning of Process Systems	1 to 6
SAW	40 94 43-13	Input/Output Listing Layout	1 to 2
SAW	40 94 43-13	Input/Output Listing	1 to 5
SAW	40 96 15	Control System Operational Description	1 to 4
SAW	40 96 45	Graphic Screen Requirements	1
DIVISION 43		PROCESS GAS AND LIQUID HANDLING, PURIFICATION AND STORAGE EQUIPMEN	
JMB	43 21 53	Sludge Pumps	1 to 5

Resp. Charge	Section	Title	Page
DIVISION 44		POLLUTION AND WASTE CONTROL EQUIPMENT	
JMB	44 31 16	Activated Carbon Adsorption Odor Control Equipment	1 to 7
DIVISION 46		WATER AND WASTEWATER EQUIPMENT	
JMB	46 33 46	Progressive Cavity Polymer Pumps	1 to 4
JMB	46 76 21	Belt Filter Presses	1 to 15
		Form A. Unit Responsibility Certification Form	1
		Form B. Manufacturer's Instruction Certification Form	1
		Form C. Manufacturer's Installation Certification Form	1

PART 1 GENERAL

1.01 WORK COVERED BY CONTRACT DOCUMENTS

A. Work of this Agreement comprises general construction including demolition of three existing belt filter presses, procurement and installation of three new belt filter presses with associated modifications of floor slab, mechanical piping and electrical systems, conversion of two window sets to coil doors, replacement of three belt filter press feed pumps and associated piping, replacement of four polymer pumps; replacement of HVAC exhaust fans; exhaust ducting and odor control system, and miscellaneous modifications and improvements. Work includes control system modifications and integration.

1.02 AGREEMENT

A. Construct Work under single lump sum Agreement.

1.03 WORK BY OTHERS

A. Work on Project which will be executed prior to start of Work of this Agreement, and which is excluded from this Agreement, as follows: None.

1.04 WORK SEQUENCE

A. Construct Work in stages to accommodate Owner's use of premises during construction period; coordinate construction schedule and operations with Owner.

B. See Section 01 15 00 for additional work sequence requirements.

1.05 CONTRACTOR USE OF PREMISES

A. Confine construction activities to within plant property boundaries. Do not trespass on private property.

B. Limit Contractor's use of premises for Work and for storage, to allow for:
1. Work by other contractors.
2. Owner occupancy.
3. Public access.

C. Existing facilities:
1. Wastewater treatment plant will be in operation throughout execution of this Contract. Schedule and conduct work so as to minimize interference with plant operation and maintenance. Construction activity, insofar as practicable, shall not interfere with operation of plant.
2. Provide temporary piping, pumping, power, and control facilities as required to maintain continuous plant operation and complete treatment except as otherwise specified. Integrity of existing plant utilities shall be maintained by Contractor at all times. Maintain road access for plant operations vehicles to all treatment process units, or provide alternate temporary road access to all treatment process units, or provide alternate temporary road access at no additional cost to City, at all times.
3. It is assumed that existing facilities outside scope of this contract are in good repair. Damage or defects noticed by Contractor shall be reported to Owner immediately and prior to start of any work. Damage caused by Contractor shall be repaired and/or replaced to its original condition as determined by Owner, at no additional cost to Owner.
4. Take special precautions to protect operating mechanical equipment, power supply and distribution equipment, and instrumentation equipment from exposure to weather, concrete dust, debris, dirt, and water during construction period.

D. Assume full responsibility for protection and safekeeping of items under this Agreement, stored on Site.

E. Obtain and pay for use of additional storage or Work areas needed for operations.

1.06 COORDINATION

A. Coordinate use of premises under direction of Owner. Confine construction equipment, storage of materials and equipment and operations of workers to areas permitted by law, ordinances, permits, or requirements of Contract Documents, and shall not unreasonably encumber premises with construction equipment or other material or equipment.

B. If it is necessary for Contractor to move its equipment, materials, or materials included in work to allow for continuous operation of plant, Contractor shall do so promptly and as directed by Owner.

C. Coordinate work of various sections of the specifications to assure efficient and orderly sequence of installation of construction elements, with provisions for accommodating items installed later.

D. Verify characteristics of elements of interrelated operating equipment are compatible; coordinate work of various sections having interdependent responsibilities for installing, connecting to, and placing in service, such equipment.

1.07 OWNER OCCUPANCY

A. Owner will occupy premises during entire period of construction for conduct of its normal operations. Cooperate with Owner's Representative in all construction operations to minimize conflict, and to facilitate Owner usage.

B. Maintain existing utility services in substantially continuous operation during construction, making and removing temporary connections as necessary.

C. Perform Work hazardous to operation of existing wastewater treatment plant, or which will require interruption of service at times specifically approved by Owner.

PART 2 PRODUCTS

NOT USED

PART 3 EXECUTION

NOT USED

END OF SECTION

PART 1 GENERAL

1.01 CONTINUITY OF PLANT OPERATIONS

A. Existing wastewater treatment plant will continuously receive and treat wastewater to meet effluent discharge requirements; these functions shall not be interrupted except as specified herein. Coordinate work to minimize interference with normal operation of plant equipment and processes.

B. Contractor shall not operate Owner's equipment. Owner will open and close valves and gates and take units off line to assist in Contractor's approved construction sequence plan. Contractor shall keep Owner fully apprised of any changes in construction schedules.

C. Bypassing:
   1. Bypassing untreated or partially treated wastewater and sludges to surface waters or drainage courses is prohibited.
   2. If bypassing caused by Contractor, its employees, or Subcontractors occurs, Owner will be entitled to take immediate corrective action without notice to Contractor.
   3. Contractor shall bear costs resulting directly or indirectly from bypassing caused by actions of Contractor, its employees, or Subcontractors, such as penalties, legal fees, expenses to stop bypass, and remedial actions.

D. Notify Owner at least one week before previously scheduled outage occurs.

1.02 SUBMITTALS

A. Detailed outage schedule of necessary removal from service for each affected tank, pipeline, channel, electrical/instrumentation circuit, equipment component, structure, and process. Include plant shutdown and outage schedule in construction schedule specified in Section 01 33 00.

B. Describe length of time for each outage.

C. Describe procedures, temporary plant, and equipment necessary to maintain treatment process operations.

1.03 SEQUENCE OF CONSTRUCTION ACTIVITIES

A. Construction schedule prepared as specified in Section 01 33 00 shall recognize constraints to sequence of construction activities specified herein. Approaches described herein and shown on Construction Sequencing drawings are actions Contractor may choose to follow to meet intent of constraints. Contractor may propose alternate methods to achieve similar results.
   1. Definitions:
      a. Dry weather periods shall, in general, be months with low precipitation, typically from August through February. Actual dry weather periods shall be as determined by Owner based on weather, precipitation, flows entering plant, and plant operation requirements.
      b. Wet weather periods shall be any time period which is not within defined dry weather periods.
      c. Typical low flow period is from 12:00 a.m. to 6:00 a.m.
      d. Minor Shutdown: Any shutdown requiring less than 4 hours.
      e. Major Shutdown: Any shutdown other than a minor shutdown.
   2. Contractor shall provide all necessary equipment, bulkheads, pumps, temporary piping, power and appurtenances necessary to facilitate shutdowns and temporary flow re-routing to perform the Work.
   3. Temporary pumping systems shall consist of multiple pumps, 2 minimum, capable of pumping anticipated flows in combination.
      a. Pumping system shall be configured for automatic.
      b. Contractor shall operate and maintain temporary pumping systems and equipment during shutdowns.
   4. Plant shutdown: Partial or complete liquid treatment plant shut down not allowed.
   5. Process Shutdowns.

a. Shutdown of individual processes or systems may be required for limited number of construction activities; notify plant superintendent at least one week prior to scheduled shutdown.
b. Provide 14 days advance notice to Owner of need for a minor shutdown.
c. Provide 30 days advance notice to Owner of need for a major shutdown.
d. Contractor shall schedule a shutdown coordination meeting with Owner one week prior to each shutdown.
e. Do not proceed with work affecting a facility's operation without obtaining Owner advance approval of need for, and duration of, such work. The Owner will endeavor to grant Contractor requests where possible. However, because Owner's primary responsibility is to treat wastewater, and plant will continuously receive wastewater and process sludges, requested timing may not be possible.
f. Any and all process shutdowns shall require a shutdown plan, including detailed schedule, backup tools and equipment, personnel involved, contingency plan, and any procedures involved in restarting process or facility. Owner's approval of Shutdown Plan is required prior to any shutdowns.
g. Shutdowns will be allowed, but shall only be allowed at times when impact to treatment or processing is minimized such as non-wet weather periods or at times when processes do not need to be operational.
h. Minimize number of shutdowns; perform activities requiring shutdown at same time.
i. Maximum duration of shutdown is dependent on process being shut down and plant operational conditions.

6. BFP Feed Pumps:
   a. Constraint:
      1) One feed pump shall be operational.
      2) Pumping to at least one belt filter press shall be maintained.
   b. Approach: Retrofit one or two pumps, piping, and new local electrical and control connections at a time. Put new units in operation prior to demolition of next old units.
7. Polymer Feed Pumps:
   a. Constraint:
      1) One feed pump shall be operational.
      2) Pumping to at least one belt filter press shall be maintained.
   b. Approach: Retrofit one or two pumps, piping, and new local electrical and control connections at a time. Put new units in operation prior to demolition of next old units.
8. Belt Filter Presses (BFPs):
   a. Constraint:
      1) Maintain one unit operational.
      2) Demolition of two existing units cannot be performed until one unit is replaced with new and new unit is fully operational.
      3) Maintain room air supply and exhaust at all times.
   b. Approach:
      1) Install gravel access at location of new drive. Provide plating as needed for the work.
      2) Remove one or both north window sets from the BFP room.
      3) Install new door and/or provide temporary opening enclosure(s) to maintain room temperature and keep out precipitation.
      4) Remove air supply duct for door opening clearance during BFP replacement activities.
      5) Demolish and replace one existing BFP.
         a) Choice for which unit to demolish first is at contractor's option unless an existing press is having operational problems whereas Owner will exercise its right to select the problematic unit to be replaced first.
         b) Modify floor for new machine.
         c) Demolish sludge, effluent water, polymer, electrical, and controls for first unit. Maintain services to the other two BFPs.
         d) Install new BFP.
         e) Install new sludge, effluent water, polymer, electrical and controls to first unit.
         f) Make unit operational and mechanically test.
         g) Initiate initial performance testing.
      6) With Owner's authorization, proceed to demolition and replacement of two remaining BFPS with similar sequence to initial unit replacement.

7) Replace roof exhaust fans in sequence that maintains at least one roof exhaust fan operational at all times.
8) Install odor control ducting and curtaining. Make odor control system operational.
9) Reinstall air supply duct and restore other systems impacted by BFP replacement.
10) Install coil doors/window sets.
11) Leave gravel in place or alternately install new driveway paving if Alternate 1 selected.

PART 2 PRODUCTS

NOT USED

PART 3 EXECUTION

NOT USED

END OF SECTION

PART 1 GENERAL

1.01 CASH ALLOWANCES

A. Allowance schedule:
   1. Section 46 76 21-Belt Filter Presses: Include stipulated sum of $742,200 for purchase, delivery, and start-up of equipment specified.

B. Costs included in cash allowances: Cost of product to Contractor or Subcontractor, less applicable trade discounts; shop drawings, delivery to site and applicable taxes, manufacturer's services.

C. Costs not included in cash allowances but included in contract price: Product handling at site, including unloading, uncrating, and storage; protection of products from elements and from damage; and labor for installation and finishing; assistance in testing and adjustment.

D. Contractor responsibilities:
   1. Arrange for and process shop drawings, product data, and samples. Arrange for delivery.
   2. Promptly inspect products upon delivery for completeness, damage, and defects. Submit claims for transportation damage.

E. Differences in costs will be adjusted by Change Order.

1.02 CONTINGENCY ALLOWANCES

A. Include in Contract, a stipulated price of $20,000 for use upon Owner's instruction.

B. Contractor's costs for products, delivery, installation, labor, insurance, payroll, taxes, bonding, equipment rental, overhead and profit will be included in Change Orders authorizing expenditure of funds from this Contingency Allowance.

C. Funds will be drawn from Contingency Allowance only by Change Order authorized by Owner.

D. At closeout of Contract, funds remaining in Contingency Allowance will be credited to Owner by Change Order.

1.03 SCHEDULE OF VALUES

A. Submit a printed schedule on EJCDC C-620 – Contractor's Application for Payment. Contractor's standard form or electronic media printout will be considered.

B. Submit Schedule of Values in duplicate within 15 days after date of Owner-Contractor Agreement.

C. Format: Use Table of Contents of this Project Manual. Identify each line item with number and title of major specification Section.

D. Include within each line item, a direct proportional amount of Contractor's overhead and profit.

E. Revise schedule to list approved Change Orders, with each Application for Payment.

1.04 APPLICATIONS FOR PAYMENT

A. Submit 3 copies of each application on EJCDC C-620 – Contractor's Application for Payment or Contractor's electronic media driven form.

B. Content and format: Use Schedule of Values for listing items in Application for Payment.

C. Submit an updated construction schedule with each Application for Payment.

D. Payment period: Submit at intervals stipulated in Agreement.

E. Submit with transmittal letter as specified for Submittals in Section 01 33 00.

F. Substantiating data: When Engineer requires substantiating information, submit data justifying dollar amounts in question. Include following with application:
   1. Partial release of liens from major subcontractors and vendors.
   2. Record documents as specified in Section 01 70 00, for review by Owner which will be returned to Contractor.
   3. Affidavits attesting to off-site stored products.
   4. Construction progress schedules, revised and current.

1.05 CHANGE PROCEDURES

A. Submittals: Submit name of individual authorized to receive change documents, and be responsible for informing others in Contractor's employ or Subcontractors of changes to Work.

B. Engineer will advise of minor changes in Work not involving an adjustment to Contract Price or Contract Time by issuing supplemental instructions on Engineer’s Instruction to Contractor (ITC) Form.

C. Engineer may issue a proposal request which includes detailed description of proposed change with supplementary or revised Drawings and Specifications, change in Contract Time for executing change. Contractor will prepare and submit an estimate within 10 days.

D. Contractor may propose changes by submitting a change authorization request to Engineer, describing proposed change and its full effect on Work. Include a statement describing reason for change, and effect on Contract Price and Contract Time with full documentation and a statement describing effect on Work by separate or other contractors. Document any requested substitutions in accordance with Section 01 60 00.

E. Stipulated price Change Order: Based on proposal request and Contractor's fixed price quotation or Contractor's change authorization request as approved by Engineer.

F. Time and material Change Order: Submit itemized account and supporting data after completion of change, within time limits indicated in Conditions of Contract. Engineer will determine change allowable in Contract Price and Contract Time as provided in Contract Documents. No time and material work will be performed without prior written authorization by Engineer.

G. Maintain detailed records of work done on time and material basis. Provide full information required for evaluation of proposed changes, and to substantiate costs for changes in Work.

H. Document each quotation for a change in cost or time with sufficient data to allow evaluation of quotation.

I. Change Order Forms: Engineer’s Change Order Form.

J. Execution of Change Orders: Engineer will issue Change Orders for signatures of parties as provided in Conditions of Contract.

K. Correlation of Contractor submittals:
   1. Promptly revise Schedule of Values and Application for Payment forms to record each authorized Change Order as a separate line item and adjust Contract Price.
   2. Promptly revise progress schedules to reflect any change in Contract Time, revise sub-schedules to adjust times for other items of work affected by change, and resubmit.
   3. Promptly enter changes in Project Record Documents.

1.06 REQUEST FOR INFORMATION

A. Questions regarding conflicts or intent of the Contract Documents shall be submitted by Contractor on attached Request for Information (RFI) form.

1.07 DEFECT ASSESSMENT

A. Replace Work, or portions of Work, not conforming to specified requirements.

B. If, in opinion of Engineer, it is not practical to remove and replace Work, Engineer will direct an appropriate remedy or adjust payment.

C. Authority of Engineer to assess defect and identify payment adjustment, is final.

D. Nonpayment for rejected products: Payment will not be made for rejected products for any of following:
   1. Products wasted or disposed of in a manner that is not acceptable.
   2. Products determined as unacceptable before or after placement.
   3. Products not completely unloaded from transporting vehicle.
   4. Products placed beyond lines and levels of required Work.
   5. Products remaining on hand after completion of Work.
   6. Loading, hauling, and disposing of rejected products.

1.08 ALTERNATES

A. Alternates quoted on Bid Forms will be reviewed and accepted or rejected at Owner's option. Accepted Alternates will be identified in Owner-Contractor Agreement.

B. Coordinate related Work and modify surrounding Work as required to complete Work, including changes under each Alternate, when acceptance is designated in Agreement between Owner and Contractor.

C. Schedule of Alternates:
   1. Alternate No. 1 – New driveway to the new BFP room coil doors: Work in this alternate consists of removing 6 inches of aggregate base (leaving 6 inches of aggregate base in place, installation of 6 inches of Portland cement concrete paving per specifications and as detailed on reference drawing C3 and all associated incidental work.
   2. Alternate No. 2 – New storefront in lieu of base bid coil door. Work in this alternate consists of installing new storefront with windows in west opening instead of coil door per specifications 08 41 13 and 08 80 00. Mullion location and spacing to match existing storefront per reference drawings A-S5 (North Elevation), AS-8 (Details K/L/M) and all associated incidental work
   3. Alternate No. 3 - Stainless Steel Overhead Door Work includes using Type 6F, 22-gage (0.90 mm), minimum, stainless steel for curtain slats and 22-gage (0.80mm) stainless steel for back cover slats for the insulated rolling doors (Section 08 30 00).

PART 2 PRODUCTS

NOT USED

PART 3 EXECUTION

NOT USED

END OF SECTION

Stanley Consultants INC.

REQUEST FOR INFORMATION

RFI No.:

Contract No. and Name:		**Date:**	
Contractor:		**Owner:**	
Engineer:			

Subject:

Drawing Reference: **Spec Section:**

Information Required (Be Specific):

_____ _____

Contractor Representative **Date**

Reply:

_____ _____

Engineer Representative **Date**

THIS IS NOT A CHANGE IN SCOPE AUTHORIZATION. IF, IN YOUR OPINION, THIS RESPONSE INVOLVES WORK WHICH CHANGES THE CONTRACT PRICE OR TIME, YOU MUST SUBMIT A PROPOSAL OR A NOTICE AS REQUIRED IN THE CONTRACT DOCUMENTS.

PART 1 GENERAL

1.01 SUBSTITUTIONS

A. For period of 30 days after effective date of Agreement, Engineer will consider formal requests from Contractor for substitution of products in place of those specified. After end of that period, requests will be considered only in case of product unavailability or other conditions beyond control of Contractor.

B. Submit 3 copies of request for substitution for consideration using attached Product Substitution Request Form. Limit each request to one proposed Substitution. Support each request with:
   1. Complete data substantiating compliance of proposed substitutions with requirements stated in Contract Documents. Burden of proof is on proposer.
      a. Product identification, including manufacturer's name and address.
      b. Manufacturer's literature; identify:
         1) Product description.
         2) Reference standards.
         3) Performance and test data.
      c. Samples, as applicable.
      d. Name and address of similar projects on which product has been used, and date of each installation.
   2. Itemized comparison of proposed substitution with product specified; list significant variations.
   3. Data relating to changes in construction schedule.
   4. Any effect of substitution on separate contracts.
   5. List of changes required in other work or products.
   6. Accurate cost data comparing proposed substitution with product specified. Amount of any net change to Contract Price.
   7. Designation of required license fees or royalties.
   8. Designation of availability of maintenance services, sources, or replacement materials.

C. Substitutions will not be considered for acceptance when:
   1. They are indicated or implied on Shop Drawings.
   2. They are requested directly by Subcontractor or supplier.
   3. Acceptance will require substantial revision of Contract Documents.

D. Substitute products shall not be ordered or installed without written notification from Engineer of Owner's acceptance.

E. Engineer will determine acceptability of proposed substitutions.

1.02 CONTRACTOR'S REPRESENTATION

A. In making formal request for substitution Contractor represents that:
   1. It has investigated proposed product and has determined that it is equal to or superior in all respects to that specified.
   2. It will provide same warranties or Bonds for substitution as for product specified or as required by Owner.
   3. It will coordinate installation of accepted substitution into Work, and will make such changes as may be required for Work to be complete in all respects.
   4. It waives claims for additional costs caused by substitution which may subsequently become apparent.
   5. Cost data is complete and includes related costs under its Agreement, but not:
      a. Costs under separate contracts.
      b. Engineer's costs for redesign or revision of Contract Documents.
   6. It will reimburse Owner for charges of Engineer or Engineer's consultants for evaluating any proposed substitute, whether proposed substitute is accepted or rejected.

1.03 ENGINEER DUTIES

A. Review Contractor's requests for substitution with reasonable promptness and advise Owner.

B. Notify Contractor in writing of Owner's decision to accept or reject requested substitution.

PART 2 PRODUCTS

NOT USED

PART 3 EXECUTION

NOT USED

END OF SECTION

PRODUCT SUBSTITUTION REQUEST FORM

To: _____

Project: _____

Specified Item: _____ _____ _____ _____
Section Page Paragraph Description

The undersigned request consideration of the following:

PROPOSED SUBSTITUTION _____

_____

Attached data includes product description, specifications, drawings, photographs, performance, and test data adequate for evaluation of the request; applicable portions of the data are clearly identified.

Attached data also includes a description of changes to the Contract Documents that the proposed substitution will require for its proper installation.

The undersigned certifies that the following paragraphs, unless modified by attachments are correct:

1. The proposed substitution does not affect dimensions shown on Drawings.
2. The undersigned will pay for changes to the building design, including engineering design, detailing, and construction costs caused by the requested substitution.
3. The proposed substitution will have no adverse affect on other trades, the construction schedule, or specified warranty requirements.
4. Maintenance and service parts will be locally available for the proposed substitution.

The undersigned further states that the function, appearance, and quality of the proposed substitution are equivalent or superior to the specified item.

Submitted by:

Signature _____

Firm _____

Address _____

_____

Date _____

Telephone _____

Attachments

For use by Engineer/Architect

☐ Approved ☐ Approved as noted

☐ Not Approved ☐ Received too late

By _____

Date _____

Remarks _____

PART 1 GENERAL

1.01 COORDINATION AND PROJECT CONDITIONS

A. Coordinate scheduling, submittals, and Work of the various sections of the Project Manual to ensure efficient and orderly sequence of installation of interdependent construction elements, with provisions for accommodating items installed later.

B. Verify utility requirements and characteristics of operating equipment are compatible with building utilities. Coordinate work of various sections having interdependent responsibilities for installing, connecting to, and placing in service, such equipment.

C. Coordinate space requirements, supports, and installation of mechanical and electrical Work which are indicated diagrammatically on Drawings. Follow routing shown for pipes, ducts, and conduit, as closely as practicable; place runs parallel with lines of building. Utilize spaces efficiently to maximize accessibility for other installations, for maintenance, and for repairs.

D. In finished areas, conceal pipes, ducts, and wiring within the construction. Coordinate locations of fixtures and outlets with finish elements.

E. Coordinate completion and clean-up of Work of separate sections in preparation for Substantial Completion and for portions of Work designated for Owner's partial occupancy.

F. After Owner occupancy of premises, coordinate access to site for correction of defective Work and Work not in accordance with Contract Documents, to minimize disruption of Owner's activities.

G. Coordinate temporary facilities required to maintain continuity of treatment facility operations during construction.

1.02 PROJECT SITE ADMINISTRATION

A. Contractor shall provide competent, suitably qualified personnel to survey and lay out Work and perform construction as required by Contract Documents. Contractor shall at all times maintain good discipline and order at site.

B. Except in connection with safety or protection of persons or Work or property at site or adjacent thereto, and except as otherwise indicated in Contract Documents, all Work at site shall be performed during regular working hours, and Contractor shall not permit overtime work or performance of Work on Saturday, Sunday, or any legal holiday without Owner's written consent given after prior written notice to Engineer.

C. Incompetent or incorrigible employees shall be dismissed from Work by Contractor or its representative when requested by Engineer, and such persons shall not again be permitted to return to Work without written consent of Engineer.

D. Workmanship shall be of best quality.

1.03 FIELD ENGINEERING

A. Employ a Land Surveyor licensed in the State of Iowa.

B. Contractor shall locate and protect survey control and reference points. Promptly notify Engineer of any discrepancies discovered.

C. Control datum for survey is that shown on Drawings.

D. Verify set-backs and easements; confirm drawing dimensions and elevations.

E. Provide field engineering services. Establish elevations, lines, and levels, utilizing recognized engineering survey practices.

F. Submit a copy of site drawing and certificate signed by the Land Surveyor that the elevations and locations of the Work are in conformance with the Contract Documents.

G. Maintain a complete and accurate log of control and survey work as it progresses.

1.04 PROJECT MEETINGS

A. Representatives of Contractor, Subcontractors and suppliers attending meetings shall be qualified and authorized to act on behalf of entity each represents.

B. Preconstruction meeting:
1. Owner’s Resident Project Representative will schedule a meeting after 15 days after Notice to proceed
2. Location: Wastewater treatment plant or other location convenient for all parties, designated by Owner.
3. Attendance:
   a. Owner's representative.
   b. Engineer and its professional consultants.
   c. Resident Project Representative.
   d. Contractor's superintendent.
   e. Major Subcontractors.
   f. Major suppliers.
   g. Others as appropriate.
4. Agenda:
   a. Submission of executed bonds and insurance certificates.
   b. Distribution of Contract Documents.
   c. Submission of list of Subcontractors, list of products, schedule of values, and progress schedule.
   d. Designation of personnel representing the parties in Contract and the Engineer.
   e. Procedures and processing of field decisions, submittals, substitutions, applications for payments, proposal request, Change Orders, and Contract closeout procedures.
   f. Scheduling.
   g. Use of premises by Owner and Contractor.
   h. Owner's requirements and partial occupancy.
   i. Temporary facilities
   j. Security and housekeeping procedures.
   k. Procedures for testing.
   l. Procedures for maintaining record documents.
   m. Requirements for start-up of equipment.
   n. Inspection and acceptance of equipment put into service during construction period.
5. Owner’s Resident Project Representative will prepare meeting notes and distribute copies within 2 days after meeting to participants, with copies to Engineer, Owner, participants, and those affected by decisions made.

C. Progress meetings:
1. Schedule and administer meetings throughout progress of the Work at periodic maximum intervals.
2. Owner’s Resident Project Representative will hold called meetings as required by progress of Work.
3. Location of meetings: Project field office of Owner.
4. Owner’s Resident Project Representative r will make arrangements for meetings, prepare agenda with copies for participants, preside at meetings.
5. Attendance:
   a. Engineer, and its professional consultants as needed.
   b. Contractor and Subcontractors as appropriate to agenda.
   c. Suppliers as appropriate to agenda.

d. Others.

6. Suggested agenda:
   a. Review, approval of minutes of previous meeting.
   b. Review of Work progress since previous meeting.
   c. Field observations, problems, conflicts.
   d. Problems which impede construction schedule.
   e. Review of off-site fabrication, delivery schedules.
   f. Corrective measures and procedures to regain projected schedule.
   g. Revisions to construction schedule.
   h. Progress, schedule, during succeeding Work period.
   i. Coordination of schedules.
   j. Review submittal schedules; expedite as required.
   k. Maintenance of quality standards.
   l. Pending changes and substitutions.
   m. Review proposed changes for:
      1) Effect on construction schedule and on completion date.
      2) Effect on other contracts of Project.
      3) Other business.
7. Owner's Resident Project Representative will prepare meeting notes and distribute copies within 5 days after meeting to participants, with copies to Engineer, Owner, participants, and those affected by decisions made.

D. Preinstallation meeting:
   1. When required in individual specification sections, convene a preinstallation meeting at Site prior to commencing work of the section.
   2. Require attendance of parties directly affecting, or affected by, Work of the specific section.
   3. Notify Owner's Resident Project Representative 4 days in advance of meeting date.
   4. Prepare agenda and preside at meeting:
      a. Review conditions of installation, preparation and installation procedures.
      b. Review coordination with related work.
   5. Record minutes and distribute copies within 2 days after meeting to participants, with copies to Engineer, Owner, participants, and those affected by decisions made.

PART 2 PRODUCTS

2.01 EQUIPMENT ELECTRICAL CHARACTERISTICS AND COMPONENTS

A. Motors: Specific motor type is specified in individual specification sections.

B. Wiring Terminations: Provide terminal lugs to match branch circuit conductor quantities, sizes, and materials indicated. Include lugs for terminal box.

C. Cord and Plug: Provide minimum 6' (2 m) cord and plug including grounding connector for connection to electric wiring system. Cord of longer length is specified in individual specification sections.

PART 3 EXECUTION

3.01 SPECIAL PROCEDURES

A. Materials: As specified in product sections; match existing with new products for patching and extending work.

B. Employ skilled and experienced installer to perform alteration work.

C. Cut, move, or remove items as necessary for access to alterations and renovation Work. Replace and restore at completion.

D. Remove unsuitable material not marked for salvage, such as rotted wood, corroded metals, and deteriorated masonry and concrete. Replace materials as specified for finished Work.

E. Remove debris and abandoned items from area and from concealed spaces.

F. Prepare surface and remove surface finishes to provide for proper installation of new work and finishes.

G. Close openings in exterior surfaces to protect existing work from weather and extremes of temperature and humidity.

H. Remove, cut, and patch Work in a manner to minimize damage and to provide means of restoring products and finishes to specified condition.

I. Refinish existing visible surfaces to remain in renovated rooms and spaces, to renewed condition for each material, with a neat transition to adjacent finishes.

J. Where new Work abuts or aligns with existing, provide a smooth and even transition. Patch Work to match existing adjacent Work in texture and appearance.

K. When finished surfaces are cut so that a smooth transition with new Work is not possible, terminate existing surface along a straight line at a natural line of division and submit recommendation to Engineer for review.

L. Trim existing doors as necessary to clear new floor finish. Refinish trim as required.

M. Patch or replace portions of existing surfaces which are damaged, lifted, discolored, or showing other imperfections.

N. Finish surfaces as specified in individual product sections.

END OF SECTION

PART 1 GENERAL

1.01 SUBMITTAL PROCEDURES

A. Submit electronically submittals required by Specification Sections. Contact Engineer as listed below for submittal instructions. An FTP/FTA site or direct posting site will be provided after award to post submittals and to receive return submittals:

Mr. Jay M. Brady
Email: bradyjay@stanleygroup.com
Stanley Consultants, Inc.
Stanley Building
225 Iowa Avenue
Muscatine, Iowa 52761-3764
Office Phone: 563-264-6322

B. Engineer will make internal distribution to the Owner and other interested parties.

C. Submittals shall be in English language.

D. Weights, measures, and units shall be English units.

E. Symbols and drawings shall conform to ANSI Y32.2/IEEE 315/CSA Z99.

1.02 CONTRACTOR RESPONSIBILITIES

A. Review submittals prior to submission. Submittals not reviewed and coordinated by Contractor are subject to being returned without review to Contractor.

B. Determine and verify:
1. Field measurements and dimensional information.
2. Field construction criteria.
3. Catalog numbers and similar data.
4. Conformance to Specifications.

C. Coordinate each submittal with other submittals and with requirements of Work and of Contract Documents.

D. Notify Engineer in writing, at time of submission, of any deviations in submittals from requirements of Contract Documents. Any such deviations permitted by Engineer will require modifications of Contract Documents.

E. Provide space on Shop Drawings for Contractor and Engineer stamps.

F. When Shop Drawings are revised for resubmission, identify all changes made since previous submission.

G. Submittals containing language imposing duties on others (such as verification of dimensions or supply of related information) inconsistent with contract language shall be null and void.

H. Submittals shall not be used as media for inquiries for information or for verification of information that must be supplied by others to Contractor. Inquiries or verification of information shall be made by separate Contractor submittal using Request for Information (RFI) process.

I. Begin no fabrication or Work which requires submittal review until return of submittals by Engineer with stamp, as either "Reviewed", “Reviewed as Noted", or “Reviewed as Noted-Resubmit.”

J. Distribute copies of reviewed submittals that carry Engineer stamp as either "Reviewed" or "Reviewed as Noted" as appropriate. Instruct parties to promptly report any inability to comply with requirements.

K. Submittals not requested will not be recognized or processed.

1.03 ENGINEER DUTIES

A. Review required submittals with reasonable promptness and in accord with schedule, only for general conformance to design concept of Project and compliance with information given in Contract Documents. Review shall not extend to means, methods, sequences, techniques, or procedures of construction or to safety precautions or program incident thereto. Review of a separate item as such will not indicate approval of assembly in which item functions. Contractor is solely responsible for coordination and accuracy of dimensional information on shop drawings. Engineer's shop drawing review and comments on dimensional information shall not relieve Contractor's responsibility for dimensional information.

B. Affix stamp and initials or signature, and indicate requirements for resubmittal, or review of submittal. Engineer's action on submittals is classified as follows:
   1. Reviewed: Submittal has been reviewed and appears to be in conformance to design concept of Project and Contract Documents. Contractor may proceed with fabrication of work in submittal.
   2. Reviewed As Noted: Submittal has been reviewed and appears to be in conformance to design concept of Project and Contract Documents, except as noted by reviewer. Contractor may proceed with fabrication of work in submittal with modifications and corrections as indicated by reviewer.
   3. Reviewed As Noted-Resubmit: Submittal has been reviewed and appears to be in conformance to design concept of Project and Contract Documents, except as noted by reviewer. Contractor may proceed with fabrication of work in submittal with modifications and corrections as indicated by reviewer. Contractor shall make any corrections indicated by reviewer and resubmit for review.
   4. Resubmit: Submittal has been reviewed and appears not to be in conformance to design concept of Project or with Contract Documents. Contractor shall not proceed with fabrication of work in submittal, but instead shall make any corrections required by reviewer and resubmit for review.
   5. Returned without Review: Submittal is being returned without having been reviewed because: 1) not required by Contract Documents; 2) grossly incomplete; 3) indicates no attempt at conformance to Contract Documents; 4) cannot be reproduced; 5) lacks Contractor's completed approval stamp; or 6) lacks design professional's seal when required by law or Contract Documents. If submittal is required by Contract Documents, Contractor shall not proceed with Work as detailed in submittal, but instead shall correct defects and resubmit for review.
   6. For Information Only: Submittal has not been reviewed but is being retained for informational purposes only.
   7. Void: Submittal is voided because it is no longer required or has been superseded by another submittal.

C. Return one electronic copy of submittals to Contractor. Contractor shall make additional distribution as required.

D. Engineer Review of submittals shall not relieve Contractor from responsibility for any variation from Contract Documents unless Contractor has, in writing, called Engineer's attention to such variation at time of submission, and Engineer has given written concurrence pursuant to Contract Documents to specific variation, nor shall any concurrence by Engineer or other reviewer relieve Contractor from responsibility for errors or omissions in submittals.

1.04 SHOP DRAWINGS SUBMITTALS

A. Submit for review for limited purpose of checking for conformance to information given and design concept expressed in Contract Documents. Produce copies and distribute in accordance with article "Submittal Procedures" and for record documents purposes as described in Section 01 70 00.

B. Designate in construction schedule, or in separate coordinated submittal schedule, dates for submission and dates that reviewed submittals will be needed.

C. Make submittals promptly in accordance with approved schedule, and in such sequence as to cause no delay in Work or in work of other contractors.

D. Present in clear and thorough manner, complete with respect to dimensions, design criteria, materials of construction, and like information to enable review of information as required.

E. Details shall be identified by reference to sheet and detail, schedule or room numbers shown on Drawings.

F. Indicate special utility and electrical characteristics, utility connection requirements, and location of utility outlets for service for functional equipment and appliances.

G. Equipment which is identified on Contract Documents with tag number or name shall be identified on Shop Drawing with same tag.

H. Schedule submittals to expedite Project. Coordinate submission of related items.

I. For each submittal for review, allow 15 days to complete review process.

J. Identify variations from Contract Documents and product or system limitations which may be detrimental to successful performance of completed Work.

K. Shop Drawings shall be submitted in electronic format.
   1. Submit electronic copy to Engineer at project site, or post in FTP site specific instructions will be provided after award.
   2. Submittal Transmittal form (see pdf attached) shall be provided in Word format for each submittal. MSWord template will be provided after award.
   3. Text documents shall be submitted in .pdf format except for the shop drawing Transmittal Form.
   4. Drawings shall be submitted in .pdf or .tif format.
   5. Electronic submittal shall be suitable for reproduction in black and white.
   6. Samples may be submitted to Engineer at address given above.

L. Submittals shall contain:
   1. Date of submission and dates of any previous submissions.
   2. Project title and number.
   3. Contract identification.
   4. Names of:
      a. Contractor.
      b. Supplier.
      c. Manufacturer.
   5. Identification of product, with Specification section number and article number.
   6. Field dimensions, clearly identified as such.
   7. Relation to adjacent or critical features of Work or materials.
   8. Applicable standards, such as ASTM or Federal Specification numbers.
   9. Identification of deviations from Contract Documents.
   10. Identification of revisions on resubmittals.
   11. An 8" x 3" blank space for Contractor and reviewer stamps.
   12. Indication of Contractor's approval, initialed or signed, with wording substantially as follows:

       "Contractor represents to Owner and Engineer that Contractor has either determined and verified all quantities, dimensions, field construction criteria, materials, catalog numbers, and similar data, or assumes full responsibility for doing so and has reviewed or coordinated each submittal with requirements of Work and Contract Documents."

   13. If Contract Documents include performance specifications stating required results which can be verified as meeting stipulated criteria, so that further design by Contractor prior to fabrication is necessary, Submittal depicting such design must be prepared under seal of professional engineer

registered licensed in appropriate Iowa and Submittal shall be signed and sealed in accordance with applicable regulations and with following certification statement:

> "I hereby certify that this engineering document was prepared by me or under my direct personal supervision, that I am a duly registered licensed professional engineer under laws of state of Iowa and I accept responsibility for adequacy of this document to meet criteria stipulated in Contract Documents."

M. Product Data:
1. Mark each copy to identify applicable products, models, options, and other data. Supplement manufacturers' standard data to provide information specific to this Project.
2. Indicate product utility and electrical characteristics, utility connection requirements, and location of utility outlets for service for functional equipment and appliances.

N. Design data:
1. Submit for Engineer's knowledge as contract administrator or for Owner.
2. Submit for information for limited purpose of assessing conformance with information given and design concept expressed in Contract Documents.

O. Data sheets:
1. Data sheets may require information not known until Contractor’s engineering is complete. Furnish estimated values based on good engineering judgment. Estimated values shall be identified by placement of “(est.)” next to value.
2. Data Sheets shall be updated and resubmitted by Contractor once final values are known.
3. Do not leave items blank or labeled “To Be Determined” or “Later.”
4. Do not submit manufacturer Product Data instead of completed data sheets.

P. Test reports:
1. Submit for Engineer's knowledge as contract administrator or for Owner.
2. Submit test reports for information for limited purpose of assessing conformance with information given and design concept expressed in Contract Documents.

Q. Certificates:
1. When specified in individual specification sections, submit certification by manufacturer, installation/application subcontractor.
2. Indicate material or product conforms to or exceeds specified requirements. Submit supporting reference data, affidavits, and certifications as appropriate.
3. Certificates may be recent or previous test results on material or product, but must be acceptable to reviewer.

R. Manufacturer's instructions:
1. When specified in individual specification sections, submit printed instructions for delivery, storage, assembly, installation, start-up, adjusting, and finishing, to Engineer for delivery to Owner in quantities specified for Product Data.
2. Indicate special procedures, perimeter conditions requiring special attention, and special environmental criteria required for application or installation.

S. Manufacturer's field reports:
1. Submit report in duplicate within 30 days of observation for information.
2. Submit for information for limited purpose of assessing conformance with information given and design concept expressed in Contract Documents.

T. Erection drawings:
1. Submit for information for limited purpose of assessing conformance with information given and design concept expressed in Contract Documents.
2. Data indicating inappropriate or unacceptable Work may be subject to action by Engineer or Owner.

U. Samples:
   1. Samples for selection as specified in product sections:
      a. Submit for aesthetic, color, or finish selection.
      b. Submit samples of finishes in colors selected, textures, and patterns for selection.
   2. Submit to illustrate functional and aesthetic characteristics of product, with integral parts and attachment devices. Coordinate sample submittals for interfacing work.
   3. Include identification on each sample, with full Project information.
   4. Submit number specified in individual Specification Sections; 1 of which will be retained by Engineer.
   5. Reviewed Samples which may be used in Work are indicated in individual Specification Sections.
   6. Samples will not be used for testing purposes unless specifically stated in specification section.
   7. Field Samples and mock-ups:
      a. Erect at Project Site, at location acceptable to Engineer.
      b. Size or area: That specified in respective Specification Section.
      c. Fabricate each Sample and mock-up complete and finished.
      d. Remove mock-ups upon acceptance of Work or when acceptable to Engineer.

V. Proposed products list:
   1. Within 15 days after date of Owner-Contractor Agreement, submit list of major products proposed to Engineer for use, with name of manufacturer, trade name, and model number of each product.
   2. For products specified only by reference standards, give manufacturer, trade name, model or catalog designation, and reference standards.

W. Operations and maintenance manuals:
   1. Designate in construction schedule, or in separate coordinated schedule, dates for submission and dates that reviewed operations and maintenance manuals will be needed.
   2. Operations and maintenance manuals shall be presented in clear and thorough manner, complete with respect to dimensions, design criteria, materials of construction, and like information to enable reviewer to review information as required. Details shall be identified by reference to sheet and detail, schedule or room numbers shown on Drawings.

1.05 RESUBMISSION REQUIREMENTS

A. Make any corrections or changes in submittals required by Engineer and resubmit until stamped as either "Reviewed," "Reviewed as Noted," or “For Information Only.”

B. Text and depictions changed on Submittal shall be back-circled (clouded).

C. Engineer will assume that portions of Submittal not back-circled have not been changed by Contractor from previous submission.

D. Indicate revision number and date in document revision block.

E. Excessive resubmittals beyond an initial submittal and one re-submittal may be backcharged through Owner to Contractor for additional engineering review and processing effort at an hourly rate of $130.

1.06 DISTRIBUTION

A. Distribute reproductions of Shop Drawings which carry Engineer stamp as either "Reviewed" or "Reviewed as Noted" to:
   1. Job site file.
   2. Record Documents file.
   3. Other affected contractors.
   4. Subcontractors.
   5. Supplier or fabricator.

B. Distribute Samples which carry Engineer stamp as either "Reviewed" or "Reviewed as Noted" as directed by Engineer.

1.07 CONSTRUCTION PROGRESS DOCUMENTATION

A. Construction progress schedules: Submit initial schedules to Engineer within 15 days after date of Owner-Contractor Agreement. After review, resubmit required revised data within 10 days.

B. Form of schedules:
   1. Prepare schedules in form of horizontal bar chart.
      a. Provide separate horizontal bar for each trade or operation.
      b. Horizontal time scale: Identify first work day of each week.
      c. Scale and spacing: To allow space for notations and future revisions.
      d. Minimum sheet size: 11 x 17.
   2. Format of listings: Table of Contents of this Project Manual.
   3. Format of listings: Chronological order of start of each item of Work.
   4. Identification of listings: By major Specification Section numbers.

C. Construction progress schedule shall show:
   1. Complete sequence of construction by activity, with Contract Price breakdown at each stage.
   2. Dates for beginning, and completion of, each major element of construction specifically listing:
      a. Site clearing.
      b. Site utilities.
      c. Foundation Work.
      d. Structural framing.
      e. Subcontractor Work.
      f. Equipment installations.
      g. Finishes.
      h. Installation and use of temporary facilities required to maintain continuity of treatment plant operations.
      i. Scheduled short term outages of treatment processes, functions, or utilities that may impact portions of the treatment plant operations.
   3. Projected percentage of completion for each item, as of first day of each month.

D. Submittal schedule shall show dates for Contractor's submittals.

E. Prepare and submit subschedules for each separate stage of Work specified in Section 01 11 00.

F. Provide subschedules to define critical portions of prime schedules.

G. Progress revisions:
   1. Indicate progress of each activity to date of submission.
   2. Show changes occurring since previous submission of schedule:
      a. Major changes in scope.
      b. Activities modified since previous submission.
      c. Revised projections of progress and completion.
      d. Other identifiable changes.
   3. Provide narrative report as needed to define:
      a. Problem areas, anticipated delays, and impact on schedule.
      b. Corrective action recommended, and its effect.
      c. Effect of changes on schedules of other prime contractors.

H. Distribution copies of reviewed schedules to:
   1. Job site file.
   2. Subcontractors.
   3. Other concerned parties.

I. Instruct recipients to report promptly to Contractor, in writing, any problems anticipated by projects shown in schedules.

1.08 PHOTOGRAPHIC DOCUMENTATION

A. Provide photographs of Site and construction throughout progress of Work produced by photographer acceptable to Engineer.

B. Each month submit photographs

C. Deliver digital files to Owner with Project Record Documents. Catalog and index in chronological sequence; provide typed table of contents.

1.09 SAFETY PROCEDURES MANUAL

A. Prepare and submit to Owner safety procedures manual defining Contractor's safety program for work on site. Manual shall include:
   1. Safety responsibilities of Contractor's personnel.
   2. Description of Contractor's safety program.
   3. Requirements of use of personal protective equipment.
   4. General safety-related rules of conduct.
   5. Fire prevention measures.
   6. Accident reporting procedures.
   7. Procedures for hot work (welding, cutting, etc.), overhead work, and work in enclosed, confined spaces (tank, boiler, etc.). Reference 29 CFR Part 1910.

1.10 SUBMITTAL TRANSMITTAL FORM PROCEDURES

A. Submittals shall be accompanied by completed copies of Submittal Transmittal form, bound herein. An electronic version of transmittal form is available and may be obtained from Engineer. Reproduce additional copies required.

B. Submit 2 copies of transmittal form for initial submittals and resubmittals. Sequentially number transmittal form. Revise submittals with original number and sequential alphabetic suffix.

C. Prior to submittal, complete information under heading “Contractor's Transmittal.”

D. Engineer will complete information under “Reviewer's Action.”

E. Do not include submittals for more than one section of Specifications on Submittal Transmittal form.

F. Identify project title, location, and number and contract title and number.

G. Identify preparer name and, submittal number, including preparer’s submittal revision number.

H. A brief description under "Title" should clearly identify specific application of equipment or material covered by Submittal, utilizing where possible same title used in Drawings and Specifications.

I. Identify Specification Section number.

J. Apply Contractor's stamp, signed or initialed certifying that review, approval, verification of products required, field dimensions, adjacent construction Work, and coordination of information is in accordance with requirements of Work and Contract Documents.

PART 2 PRODUCTS

NOT USED

PART 3 EXECUTION

NOT USED

END OF SECTION

Date Received _____

Date Distributed _____

SUBMITTAL TRANSMITTAL

Transmittal No.

Project Title _____ Project No. _____ Contract No. _____

Project Location _____ Contract Title _____

CONTRACTOR'S TRANSMITTAL

ENGINEER'S/ARCHITECT'S ACTION

Status Abbreviations:

R - Reviewed
RN - Reviewed as Noted
RNR – Reviewed as Noted Resubmit
RS – Resubmit
RET - Returned Without Review
FIO - For Information Only
V - Void

Preparer	Preparer Submittal No.	Rev. No.	Title	Section No.	SC Submittal No.	Status	Distribution (No.)					
							Cont	RPR	Own	Des		

Contractor Remarks

Address

By _____ Date _____

By Signature above, the Contractor shall certify that they have reviewed the submittal and that they comply with all applicable specification sections and contract drawings. Action of any kind on submittal by Engineer/Architect does not relieve Contractor from responsibility for errors, correctness of details, or conformance to the contract.

Engineer/Architect Remarks

Stanley Consultants
A Stanley Group Company
Engineering, Environmental and Construction Services - Worldwide

By _____

Date _____

PART 1 GENERAL

1.01 QUALITY CONTROL AND CONTROL OF INSTALLATION

A. Monitor quality control over suppliers, manufacturers, products, services, site conditions, and workmanship, to produce Work of specified quality.

B. Comply with manufacturers' instructions, including each step in sequence.

C. Should manufacturers' instructions conflict with Contract Documents, request clarification from Engineer before proceeding.

D. Comply with specified standards as minimum quality for the Work except where more stringent tolerances, codes, or specified requirements indicate higher standards or more precise workmanship.

E. Perform Work by persons qualified to produce required and specified quality.

F. Verify that field measurements are as indicated on Shop Drawings or as instructed by manufacturer.

G. Secure products in place with positive anchorage devices designed and sized to withstand stresses, vibration, physical distortion, or disfigurement.

1.02 TOLERANCES

A. Monitor fabrication and installation tolerance control of products to produce acceptable Work. Do not permit tolerances to accumulate.

B. Comply with manufacturers' tolerances. Should manufacturers' tolerances conflict with Contract Documents, request clarification from Engineer before proceeding.

C. Adjust products to appropriate dimensions; position before securing products in place.

1.03 BUILDING CODES AND PERMITS

A. Obtain and pay for all construction permits and licenses. Owner shall assist Contractor, when necessary, in obtaining such permits and licenses.

B. Pay all governmental charges and inspection fees necessary for prosecution of Work, which are applicable at time of opening of Bids. Pay all charges of utility service companies for connections to Work. Owner will pay all charges of such companies for capital costs related thereto.

C. Give all notices and comply with all laws, ordinances, building and construction codes, rules, and regulations applicable to Work. If Contractor observes that Specifications or Drawings are at variance therewith, give Engineer prompt written notice thereof, and any necessary changes shall be adjusted by appropriate Modification.

D. If Contractor performs any Work knowing or having reason to know that it is contrary to such laws, ordinances, rules, and regulations, and without such notice to Engineer, Contractor shall bear all costs arising therefrom; however, it shall not be Contractor's primary responsibility to make certain that Specifications and Drawings are in accordance with such laws, ordinances, rules, and regulations.

E. Obtain and pay for NPDES permit coverage for Project under Iowa DNR General Permit No. 2 for "Storm Water Discharges Associated with Industrial Activity for Construction Activities." Contractor shall be responsible for all aspects of permit application process including, but not limited to:
   1. Prepare effective Storm Water Pollution Prevention Plan in accordance with Iowa DNR requirements.

2. Prepare and file complete Iowa DNR "Notice of Intent for NPDES Coverage under General Permit."
3. Prepare "Public Notice of Storm Water Discharge" and publish in 2 newspapers in accordance with Iowa DNR requirements.
4. Submit required information and direct questions to:

   Mr. Joe Griffin
   Storm Water Coordinator
   Iowa DNR
   900 E. Grand Avenue
   Des Moines, Iowa 53019-0034
   (515) 281-7017

1.04 REFERENCES

A. For products or workmanship specified by association, trade, or other consensus standards, comply with requirements of the standard, except when more rigid requirements are specified or are required by applicable codes.

B. Conform to reference standard by date of issue current on date for receiving bids, except where a specific date is established by code.

C. Obtain copies of standards where required by product specification sections.

D. Should specified reference standards conflict with Contract Documents, request clarification from the Engineer before proceeding.

E. Neither contractual relationships, duties, nor responsibilities of the parties in Contract nor those of the Engineer shall be altered from the Contract Documents by mention or inference otherwise in any reference document.

F. Abbreviations used in Drawings and Specifications are as specified in ASME Y14.38 and IEEE 260.

G. Schedule of references:
   1. ACI - American Concrete Institute
   2. AISC - American Institute of Steel Construction
   3. ANSI - American National Standards Institute
   4. ASME - American Society of Mechanical Engineers
   5. ASTM – International Standards Worldwide
   6. AWS - American Welding Society
   7. IBC - International Building Code
   8. ICC - International Code Council, Inc.
   9. IEEE - Institute of Electrical and Electronics Engineers
   10. NFPA - National Fire Protection Association
   11. NRMCA - National Ready Mixed Concrete Association
   12. SMACNA - Sheet Metal and Air Conditioning Contractors' National Association
   13. UL - Underwriters' Laboratories, Inc.

1.05 WELDING CERTIFICATES

A. Promptly after Notice of Award, submit to Engineer one copy, unless specified otherwise, for each person, by name, assigned to do field welding of materials installed under this Agreement.

B. Show on certificates that each person has passed tests specified by AWS.

C. Submit certificates prior to execution of any welding. Certificates not required for nonstructural tack welding.

1.06 TESTING AND INSPECTION SERVICES

A. Owner will employ and pay for specified services of a firm to perform testing and inspection.

B. The testing firm will perform tests, inspections and other services specified in individual specification sections and as required by the Engineer.
   1. Laboratory: Authorized to operate in location in which Project is located.
   2. Laboratory staff: Maintain a full time specialist on staff to review services.
   3. Testing equipment: Calibrated at reasonable intervals with devices of accuracy traceable to either National Bureau of Standards or accepted values of natural physical constants.

C. Testing, inspections and source quality control may occur on or off the project site.

D. Cooperate with testing firm; furnish samples of materials, design mix, equipment, tools, storage, safe access, and assistance by incidental labor as requested.
   1. Notify Engineer and testing firm 24 hours prior to expected time for operations requiring services.
   2. Make arrangements with testing firm and pay for additional samples and tests required for Contractor's use.

E. Testing and employment of testing agency or laboratory shall not relieve Contractor of obligation to perform Work in accordance with requirements of Contract Documents.

F. Re-testing or re-inspection required because of nonconformance to specified requirements shall be performed by the same testing firm on instructions by the Engineer. Payment for re-testing or re-inspection will be charged to the Contractor by deducting testing charges from the Contract Sum/Price.

G. Agency responsibilities:
   1. Test samples of mixes submitted by Contractor.
   2. Provide qualified personnel at site. Cooperate with Engineer and Contractor in performance of services.
   3. Perform specified sampling and testing of products in accordance with specified standards.
   4. Ascertain compliance of materials and mixes with requirements of Contract Documents.
   5. Promptly notify Engineer and Contractor of observed irregularities or non-conformance of Work or products.
   6. Perform additional tests required by Engineer.
   7. Attend preconstruction meeting.

H. Agency reports: After each test, promptly submit two copies of report to Engineer and to Contractor. When requested by Engineer, provide interpretation of test results. Include the following:
   1. Date issued.
   2. Project title and number.
   3. Name of inspector.
   4. Date and time of sampling or inspection.
   5. Identification of product and specifications section.
   6. Location in the Project.
   7. Type of inspection or test.
   8. Date of test.
   9. Results of tests.
   10. Conformance with Contract Documents.

I. Limits on testing authority:
   1. Agency or laboratory may not release, revoke, alter, or enlarge on requirements of Contract Documents.
   2. Agency or laboratory may not approve or accept any portion of the Work.
   3. Agency or laboratory may not assume any duties of Contractor.
   4. Agency or laboratory has no authority to stop the Work.

1.07 MANUFACTURERS' FIELD SERVICES

A. When specified in individual specification sections, require material or product suppliers or manufacturers to provide qualified staff personnel to observe site conditions, conditions of surfaces and installation, quality of workmanship, start-up of equipment, test, adjust and balance of equipment as applicable, and to initiate instructions when necessary.

B. Submit qualifications of observer to Engineer 30 days in advance of required observations.

C. Report observations and site decisions or instructions given to applicators or installers that are supplemental or contrary to manufacturers' written instructions.

D. Refer to Section 01 33 00, paragraph “Manufacturers' Field Reports.”

PART 2 PRODUCTS

NOT USED

PART 3 EXECUTION

3.01 EXAMINATION

A. Verify that existing site conditions and substrate surfaces are acceptable for subsequent Work. Beginning new Work means acceptance of existing conditions.

B. Verify that existing substrate is capable of structural support or attachment of new Work being applied or attached.

C. Examine and verify specific conditions described in individual specification sections.

D. Verify that utility services are available, of the correct characteristics, and in the correct locations.

3.02 PREPARATION

A. Clean substrate surfaces prior to applying next material or substance.

B. Seal cracks or openings of substrate prior to applying next material or substance.

C. Apply manufacturer required or recommended substrate primer, sealer, or conditioner prior to applying any new material or substance in contact or bond.

3.03 FIELD PERFORMANCE TESTS

A. After system or equipment necessary for operation of Work is in operating condition, Contractor shall supervise operation of equipment or system for period sufficient to assure proper functioning, and make necessary observations, investigations, and adjustment.

B. Notify Engineer when Work is considered to be complete, in operating condition, and ready for inspection and tests.

C. Engineer will conduct tests it deems necessary to determine if equipment or system functions properly.

D. If equipment or system fails to function properly, or guaranteed performance is not indicated, Contractor shall make necessary corrections, including replacement, at no cost to Owner, and after such corrections are completed, demonstrate to Engineer that equipment or system functions properly and guaranteed performance is obtainable.

END OF SECTION

PART 1 GENERAL

1.01 SERVICE ENGINEER RESPONSIBILITIES

A. Manufacturer shall provide qualified Service Engineer(s), as necessary to:
   1. Instruct and advise Owner and Owner's installing contractor regarding proper method for unloading, erecting, and installing equipment to ensure installation in accordance with manufacturer's instructions.
   2. Supervise assembly of equipment.
   3. Ensure that alignment and clearances of equipment are checked and adjusted to allowable tolerances.
   4. Inspect completed installation to ensure apparatus is in operating condition, making such detailed checks of equipment installation as are necessary to ascertain that equipment is assembled, installed, aligned, connected, lubricated, and prepared for operation in accordance with manufacturer's instructions and recommendations.
   5. Review and accept the construction of the equipment installation at the following stages:
      a. When equipment has been correctly installed in the manner and to the tolerances prescribed by the Manufacturer for correct performance.
      b. When equipment installation has been satisfactorily tested to the levels of performance necessary to meet the requirements of these specifications.
      c. When Owner's training has been satisfactorily completed.
   6. Check connections to equipment and adjust, or supervise adjustment of, control and indicating devices after equipment has been installed and connected.
   7. Provide Engineer with duplicate copies of final alignment and clearance measurements on all rotating or reciprocating equipment. Measurements shall clearly identify each piece of equipment.
   8. Supervise preliminary operation of equipment and necessary adjustments.
   9. Provide the services of factory trained instructors for the purpose of training the Owner's personnel in the proper operation and maintenance of the equipment. The instruction work, shall consist of classroom and hands-on field training. Subjects shall include the following:
      a. Start-up procedures
      b. Shutdown procedures
      c. Troubleshooting
      d. Selection of proper polymer types and dosages (for BFPs)
      e. Replacement of dewatering belts (for BFPs)
      f. Operating adjustments for performance optimization
      g. Preventive maintenance
      h. Maintenance procedures
      i. Emergency procedures
      j. Records keeping
   10. The Manufacturer shall submit a course outline, along with proposed class materials, for review by the Owner and Engineer at least 30 days prior to the training.

B. Presence of Service Engineer will in no way relieve Manufacturer of any responsibility assumed under Agreement.

C. Work and abilities of Service Engineer shall be subject to review of Engineer. If Engineer determines that any Service Engineer is not properly qualified, Seller shall replace Service Engineer upon written notification by Engineer.

D. Manufacturer shall provide continuity in assignment of Service Engineer to Work. In event substitution of Service Engineer is made which is not at request of Engineer, substitute's time for "familiarization" shall be at Manufacturer's expense.

E. Manufacturer shall be responsible for multiple trips and associated expenses including labor necessary to fulfill Service Engineer's responsibilities during equipment installation, adjustment, checkout, testing, and training through final acceptance.

F. If any of Service Engineer's time spent at site or if any of his trips to site are required to make corrections to equipment supplied under Agreement resulting from defective design, material or workmanship used in manufacture of equipment, such time and trips will be at Manufacturer's expense and will not be counted against number of working days or trips specified, nor will unit prices apply.

G. Training Summary:
1. The following table summarizes training time expected.

Item	Onsite Training Time
Belt Filter Presses	32 hours
BFP Feed Pumps	4 hours
Polymer Pumps	4 hours
Odor Control System	8 hours
Travel time is in addition to onsite time	

H. Manufacturer shall provide two additional trips by qualified Service Engineer to provide up to 6 hours of onsite service per trip under its base proposal pricing. Trips shall be performed at 6 months and 12 months from final acceptance to assist owner in troubleshooting, maintenance, operational adjustments, and additional training. Owner may adjust schedule of the two trips as necessary for its needs.

I. The following table summarizes follow up trips expected**.**

Item	Trips	Onsite Time per Trip
Belt Filter Presses	2 (6 and 12 months)	8 hours
BFP Feed Pumps	1	4 hours
Polymer Pumps	1	4 hours
Odor Control System	1	8 hours
	Travel time is in addition to onsite time	

PART 2 PRODUCTS

NOT USED

PART 3 EXECUTION

NOT USED

END OF SECTION

PART 1 GENERAL

1.01 REQUIREMENTS INCLUDE

A. Special inspections and structural observations required by IBC 2012.

1.02 PRICE AND PAYMENT

A. Unless noted otherwise, provide and pay for materials, samples, mockups, and assemblies required for testing and inspection. Pay for shipping costs related to delivery of Work to Site.

B. Special Inspector will pay for shipping costs of samples transported from Site to laboratory.

C. If exploratory work is required to determine cause of defects, cost of such work shall be paid by Contractor. If work is found to be defective, in judgment of Special Inspector, Contractor shall reimburse Owner for costs incurred in this event.

D. Tests as required to qualify Contractor or workers for any phase of Work, shall be paid by Contractor.

1.03 DEFINITIONS

A. Building official: Officer or its duly authorized representative charged with administration and enforcement of adopted building code.

B. Continuous: Full time observation of work requiring special inspection by an approved Special Inspector who is present in area where work is being performed.

C. Fabricator: Contractor who fabricates members and assemblies on premises of Contractor's shop.

D. Field quality control testing: Tests and inspections that are performed on-site for installation of Work and for completed Work.

E. Inspection: Evaluation of systems, primarily requiring observation and technical adjustment.

F. Installer/applicator/erector: Contractor or another entity engaged by Contractor as an employee, Subcontractor, or Sub-subcontractor, to perform a particular construction operation, including installation, erection, application, and similar operations.

G. Periodic: Part-time or intermittent observation of work requiring special inspection by an approved Special Inspector who is present in area where work is being performed. The periodic inspection intervals shall be at beginning of work, at times of significant work, prior to work being concealed, and at completion of work.

H. Preconstruction testing: Tests and inspections that are performed specifically for Project before products and materials are incorporated into Work to verify performance or compliance with specified criteria.

I. Product testing: Tests and inspections performed by NRTL, NVLAP, or testing agency qualified to conduct product testing and acceptable to authorities having jurisdiction, to establish product performance and compliance with industry standards.

J. Special Inspector (SI): Experienced person who is educated and qualified in conducting, supervising, and evaluating tests and/or inspections.
   1. Where tests or inspections are required to be performed by a certified individual, SI shall have required certifications.

2. Where tests or inspections are required to be performed by a licensed engineer, SI shall be a licensed engineer or shall be under direct supervision of a licensed engineer experienced with type of work requiring special testing and inspection.

K. Special testing and inspection services: Items required by building code as adopted by local Building Official, and other items identified which in professional judgment of Engineer, are critical to integrity of building structure. Services are required of materials, installation, fabrication, erection, or placement of components and connections requiring special expertise to ensure compliance with approved Contract Documents and referenced standards.

L. Source quality control testing: Tests and inspections that are performed at source, i.e., plant, mill, factory, or shop.

M. Testing: Evaluation of systems, primarily requiring physical manipulation and analysis of materials, in accordance with approved standards.

N. Testing agency: Established and approved independent testing agency acceptable to Owner and Building Official and as noted below:
1. Authorized to operate in state in which project is located and experienced with requirements and testing methods specified in Statement of Special Inspection.
2. Testing equipment shall be calibrated at reasonable intervals by devices of accuracy traceable to either National Bureau of Standards, or to accepted values of natural physical constants.

1.04 SPECIAL INSPECTOR(S)

A. More than one Special Inspector (SI) may be required to provide varied knowledge and experience necessary to adequately test and inspect all categories of work requiring special inspection.

B. SIs shall perform their duties independent from construction quality control staff employed by Contractor. SI services do not relieve Contractor of responsibility for compliance with requirements of contract documents.

C. Owner will employ and pay for specified services of SI(s).

1.05 INFORMATIONAL SUBMITTALS

A. Qualification Data: Special Inspector shall submit information to Building Official as required to get Building Official approval of Special Inspector's qualifications. Special Inspector shall submit letter to Owner documenting acceptance of qualifications by Building Official.

B. Schedule of Tests and Inspections: Prepared in tabular form by Special Inspector, to submit to Owner, Contractor and Engineer, and including following:
1. Specification Section number and title.
2. Description of test and inspection.
3. Identification of applicable standards.
4. Identification of test and inspection methods.
5. Number of tests and inspections required.
6. Time schedule or time span for tests, inspections, and submittal of reports.
7. Requirements for obtaining samples.
8. Unique characteristics of each quality-control service.

C. Reports: Prepare and submit certified written reports that include following:
1. Date of issue.
2. Project title and number.
3. Name, address, and telephone number of testing agency.
4. Dates and locations of samples and tests or inspections.
5. Names of individuals making tests and inspections.
6. Description of Work and test and inspection method.
7. Identification of product and Specification Section.

8. Complete test or inspection data.
9. Test and inspection results and an interpretation of test results.
10. Record of temperature and weather conditions at time of sample taking and testing and inspecting.
11. Comments or professional opinion on whether tested or inspected Work complies with Contract Document requirements.
12. Name and signature of Special Inspector.
13. Recommendations on retesting and re-inspecting.

D. Submit Reports to Owner, Building Official, Contractor, and Engineer weekly. A final report of inspections documenting required special inspections and correction of discrepancies shall be submitted periodically.

1.06 QUALITY ASSURANCE

A. Special Inspector acting as Owner's Representative may require testing and inspection of work at plant, before shipment. Owner reserves right to reject material not complying with Contract Documents.

B. Regulatory requirements:
1. Perform special inspections, tests, and structural observations in accordance with IBC Chapter 17 and in accordance with requirements of this section.
2. Testing and inspection shall be performed in accordance with industry standard used as reference for specific material or procedure unless other criteria are specified. In absence of a referenced standard, tests shall be accomplished in accordance with generally accepted industry standards.
3. Work shall be checked as it progresses, but failure to detect any defective work or materials shall in no way prevent later rejection if defective work or materials are discovered, nor shall it obligate Owner to accept such work.

C. Qualifications: Following paragraphs establish minimum qualification levels required; individual Specification Sections specify additional requirements.
1. Installer: A firm or individual experienced in installing, erecting, or assembling work similar in material, design, and extent to that indicated for this Project, whose work has resulted in construction with a record of successful in-service performance.
2. Manufacturer: A firm experienced in manufacturing products or systems similar to those indicated for this Project and with a record of successful in-service performance, as well as sufficient production capacity to produce required units.
3. Fabricator: A firm experienced in producing products similar to those indicated for this Project and with a record of successful in-service performance, as well as sufficient production capacity to produce required units.
4. Engineer: Professional Engineer legally qualified to practice in jurisdiction where Project is located and who is experienced in providing engineering services of kind indicated. Engineering services are defined as those performed for installations of system, assembly, or products that are similar to those indicated for this Project in material, design, and extent.
5. Specialists: Certain sections of Specifications require that specific construction activities shall be performed by entities who are recognized experts in those operations. Specialists shall satisfy qualification requirements indicated and shall be engaged for activities indicated. Requirement for specialists shall not supersede building codes and regulations governing Work.
6. Testing agency: NRTL, an NVLAP, or independent agency with experience and capability to conduct testing and inspecting indicated, as documented according to ASTM E548; and with additional qualifications specified in individual Sections; and where required by authorities having jurisdiction, that is acceptable to authorities.
   a. NRTL: Nationally recognized testing laboratory according to 29 CFR 1910.7.
   b. NVLAP: Testing agency accredited according to NIST National Voluntary Laboratory Accreditation Program.
7. Factory-Authorized Service Representative: Authorized representative of manufacturer who is trained and approved by manufacturer to inspect installation of manufacturer's products that are similar in material, design, and extent to those indicated for this Project.

D. Conflicting requirements:
   1. If compliance with two or more standards is specified and standards establish different or conflicting requirements for minimum quantities or quality levels, comply with most stringent requirement. Refer uncertainties and requirements that are different, but apparently equal, to Engineer for a decision before proceeding.
   2. Minimum quantity or quality levels: Quantity or quality level shown or specified shall be minimum provided or performed. Actual installation may comply exactly with minimum quantity or quality specified, or it may exceed minimum within reasonable limits. To comply with these requirements, indicated numeric values are minimum or maximum, as appropriate, for context of requirements.

1.07 RESPONSIBILITIES

A. Special Inspector:
   1. Attend a pre-construction meeting to review scope of special testing and inspection.
   2. Test or inspect work specified for conformance with approved design Drawings, Specifications, and applicable material and workmanship provisions of code.
   3. Perform testing and inspection in a timely manner to avoid delay of work. Coordinate sequence of activities to accommodate required quality assurance and quality control services with minimum of delay and to avoid necessity of removing and replacing construction to accommodate testing and inspecting.
   4. Schedule times for tests, inspections, obtaining samples, and similar activities.
   5. Bring discrepancies to immediate attention of Contractor for correction, then, if uncorrected after a reasonable period of time, to attention of Owner, Engineer and Building Official.
   6. Submit test and inspection reports to Building Official, Contractor, Engineer, and other designated persons.
   7. Limits of authority: Special Inspectors may not waive or alter Contract requirements, or approve or accept any portion of Work unless specifically authorized by Owner. SIs may not assume any duties of Contractor, and they have no authority to stop or reject Work.

B. Engineer:
   1. Identify items requiring special testing and inspection specified.
   2. If requested, attend a pre-construction meeting to review scope of special structural testing and inspection.
   3. Review summary reports submitted by Special Inspectors.

C. Contractor
   1. Attend preconstruction meeting to review scope of special testing and inspection.
   2. Provide SI access to approved Drawings and Specifications at job Site.
   3. Review reports submitted by SIs.
   4. Retain at job Site reports submitted by SIs for review by Building Official upon request.
   5. Correct in a timely manner, deficiencies identified in inspection and testing reports. Allow adequate time for corrective work, re-inspection, and documentation.
   6. Provide SI safe access to work requiring inspection or testing.
   7. Provide labor and facilities to provide access to Work and to obtain, handle and deliver samples, to facilitate testing and inspection and for storage and curing of test samples.
   8. Verify conformance of Work within specified construction tolerances.
   9. Costs of retesting and reinspecting construction that replaces or is necessitated by work that failed to comply with Contract Documents.
   10. Maintain a log of tests and inspections at Site.

D. Building Official (typical responsibilities; noted for information only):
   1. Determine work which, in its opinion, involves unusual hazards or conditions in accordance with IBC.
   2. Approve fabricators of assemblies as it deems fit.
   3. Review and approve SI qualifications.
   4. Review reports and recommendations submitted by SIs.
   5. Review "final signed reports" submitted by SIs. Documents should be accepted and approved by building department prior to issuance of a Certificate of Occupancy.

E. Owner:
   1. Establish funding to provide for cost of special testing and inspection services.
   2. Provide SI with approved design Drawings and Specifications and with reviewed Shop Drawings.

1.08 NOTICE OF INSPECTIONS

A. Provide adequate notice for inspections performed by Building Official, as required by building code and other local codes.

B. Provide adequate notice for inspections performed by SI.

PART 2 PRODUCTS

NOT USED

PART 3 EXECUTION

3.01 PERIODIC SITE OBSERVATIONS BY ENGINEER

A. Special testing and inspection, conventional testing and inspection, and periodic inspections by Building Official do not preclude normal field involvement and site observations by Engineer, nor shall it relieve Contractor of any responsibility to complete work in accordance with approved drawings and specifications in a timely manner.

3.02 TEST AND INSPECTION LOG

A. Prepare record of tests and inspections. Include:
   1. Date test or inspection was conducted.
   2. Description of Work tested or inspected.
   3. Identification of testing agency or SI conducting test or inspection.

B. Maintain log at Project Site. Post changes and modifications as they occur. Provide access to test and inspection log for reference during normal working hours.

3.03 REPAIR AND PROTECTION

A. On completion of testing, inspecting, sample taking, and similar services, repair damaged Work and restore substrates and finishes to eliminate deficiencies, including deficiencies in visual qualities of exposed surfaces, as judged solely by Special Inspector.
   1. Provide materials and comply with installation requirements specified in other Specification Sections. Restore patched areas and extend restoration into adjoining areas with durable seams that are as invisible as possible.

B. Protect work exposed by or for testing and/or inspection and protect repaired work. Repair and protection is Contractor's responsibility, regardless of assignment of responsibility for testing and/or inspection.

3.04 STATEMENT OF SPECIAL INSPECTION AND TESTS

A. Attached Statement of Special Inspections and Tests outlines inspections and tests that will be performed by Special Inspector in accordance with IBC 2012 Chapter 17. Additional information on tests and inspections is included in referenced Specification Sections.

B. Tests and inspections listed in Statement of Special Inspection and Tests are in addition to those required by Contractor’s quality control program.

END OF SECTION

As required by 2012 IBC Building Code 1704.3, Engineer has completed following Statement of Special Inspections and Tests. Completion of Statement of Special Inspections and Tests and submission to Building Official is a condition for issuance of Building Permit.	
Project Title:	Iowa City Belt Filter Press Replacement
Project No.:	26710
Project Address:	Iowa City, IA
Architect/Engineer:	Stanley Consultants, Inc.
Name of Person Completing this Statement:	Andrea L Bickford, P.E.
Phone:	563-264-6600
Date:	08/03/2017

STATEMENT OF SPECIAL INSPECTIONS AND TESTS

INSPECTION AND TESTING (Continuous and Periodic as Defined by IBC)	CONT. / QC	PERIOD. / QA	REFERENCE STANDARD	IBC REFERENCE	REFERENCED SPECIFICATION SECTION
CONT. = Continuous PERIOD. = Periodic QC = Quality Control QA = Quality Assurance					
O = Observe these items on a random basis. Operations need not be delayed pending these inspections.					
P = Perform these tasks for each welded joint or member.					
A. Structural Steel:			AISC 360	1705.2.1	05 50 00
1. Inspection Tasks Prior to Welding					05 50 00
a. Welding procedure specifications (WPSs) availability	P	P			
b. Manufacturer certifications for welding consumables available	P	P			
c. Material identification (type/grade)	O	O			
d. Welder identification system	O	O			
e. Fit-up of groove welds (including joint geometry): joint preparation, dimensions (alignment, root opening, root face, bevel), cleanliness (condition of steel surfaces), tacking (tack weld quality and location), backing type and fit (if applicable)	O	O			
f. Configuration and finish of access holes	O	O			
g. Fit-up of fillet welds: Dimensions (alignment, gaps at root), cleanliness (condition of steel surfaces), tacking (tack weld quality and location)	O	O			
h. Check welding equipment	O				
2. Inspection Tasks During Welding					05 50 00
a. Use of qualified welders	O	O			
b. Control and handling of welding consumables: Packaging, Exposure control	O	O			

STATEMENT OF SPECIAL INSPECTIONS AND TESTS					
INSPECTION AND TESTING (Continuous and Periodic as Defined by IBC)	**CONT. / QC**	**PERIOD. / QA**	**REFERENCE STANDARD**	**IBC REFERENCE**	**REFERENCED SPECIFICATION SECTION**
c. No welding over cracked tack welds	O	O			
d. Environmental conditions: Wind speed within limits, Precipitation and temperature	O	O			
e. WPS followed: Settings on welding equipment, Travel speed, Selected welding materials, shielding gas type/flow rate, preheat applied, interpass temperature maintained (min/max), Proper position (F, V, H, OH)	O	O			
f. Welding technique: interpass and final cleaning, each pass within profile limitations, Each pass meets quality requirements	O	O			
3. Inspection Tasks After Welding					05 50 00
a. Welds cleaned	O	O			
b. Size, length, and location of welds	P	P			
c. Welds meet visual acceptance criteria: Crack prohibition, Weld/base-metal fusion, Crater cross section, Weld profiles, Weld size, Undercut, Porosity	P	P			
d. Arc strikes	P	P			
e. k-area	P	P			
f. Backing removed and weld tabs removed (if required)	P	P			
g. Repair activities	P	P			
h. Document acceptance or rejection of welded joint or member	P	P			
4. Inspection Tasks Prior to Bolting					05 50 00
a. Manufacturer's certifications available for fastener materials	O	P			
b. Fasteners marked in accordance with ASTM requirements	O	O			
c. Proper fasteners selected for joint detail (grade, type, bolt length if threads are to be excluded from shear plane)	O	O			

STATEMENT OF SPECIAL INSPECTIONS AND TESTS					
INSPECTION AND TESTING (Continuous and Periodic as Defined by IBC)	**CONT. / QC**	**PERIOD. / QA**	**REFERENCE STANDARD**	**IBC REFERENCE**	**REFERENCED SPECIFICATION SECTION**
d. Proper bolting procedure selected for joint detail	O	O			
e. Connecting elements, including appropriate faying surface condition and hole preparation, if specified, meet applicable requirements	O	O			
f. Pre-installation verification testing by installation personnel observed and documented for fastener assemblies and methods used	P	O			
g. Proper storage provided for bolts, nuts, washers and other fastener components	O	O			
5. Inspection Tasks During Bolting					05 50 00
a. Fastener assemblies, of suitable condition, placed in all holes and washers (if required) are positioned as required	O	O			
b. Joint brought to snug tight condition prior to pretensioning operation	O	O			
c. Fastener component not turned by wrench prevented from rotating	O	O			
d. Fasteners are pretensioned in accordance with RCSC Specification, progressing systematically from most rigid point toward free edges	O	O			
6. Inspection Tasks After Bolting					05 50 00
a. Document acceptance or rejection of bolted connections	P	P			
B. Concrete Construction:				1705.3	
1. Inspection of reinforcing steel, including placement.		X	ACI 318: 3.5, 7.1-7.7	1910.4	03 00 10
2. Inspection of anchors cast in concrete where allowable loads have been increased or where strength design is used.		X	ACI 318: 8.1.3, 21.2.8	1908.5, 1909.1	03 00 10
3. Inspection of anchors post-installed in hardened concrete members.		X	ACI 318: 3.8.6, 8.1.3, 21.2.8	1909.1	03 00 10
4. Verify use of required design mix.		X	ACI 318: Ch. 4, 5.2-5.4	1904.2, 1910.2, 1910.3	03 00 10

STATEMENT OF SPECIAL INSPECTIONS AND TESTS					
INSPECTION AND TESTING (Continuous and Periodic as Defined by IBC)	**CONT. / QC**	**PERIOD. / QA**	**REFERENCE STANDARD**	**IBC REFERENCE**	**REFERENCED SPECIFICATION SECTION**
5. At time fresh concrete is sampled to fabricate specimens for strength tests, perform slump and air content tests, and determine temperature of concrete.	X		ASTM C 172, ASTM C 31; ACI 318: 5.6, 5.8	1910.10	03 00 10
6. Inspection of concrete placement for proper application techniques.	X		ACI, 318: 5.9, 5.10	1910.6, 1910.7, 1910.8	03 00 10
7. Inspection for maintenance of specified curing temperature and techniques.		X	ACI, 318: 5.11 - 5.13	1910.9	03 00 10
8. Inspect formwork for shape, location and dimensions of concrete member being formed.		X	ACI 318: 6.1.1		03 00 10
C. Soils:				1705.6	
1. Verify materials below shallow foundations are adequate to achieve design bearing capacity		X			31 23 16-16
2. Verify excavations are extended to proper depth and have reached proper material		X			31 23 16-16
3. Perform classification and testing of compacted fill material		X			31 23 16-16
4. Verify use of proper materials, densities and lift thicknesses during placement and compaction of compacted fill.	X				31 23 16-16
5. Prior to placement of fill, observe subgrade, and verify site has been prepared properly.		X			31 23 16-16

PART 1 GENERAL

1.01 TEMPORARY ELECTRICITY

A. Owner will pay cost of energy used. Exercise measures to conserve energy. Use Owner’s existing power service.

B. Provide temporary electric feeders as necessary to facilitate Work. Coordinate feed location(s) with Owner. Do not disrupt Owner's use of service.

C. Power service characteristics: 120-volt, single-phase. 480-volt, 3-phase power is available. Coordinate with Owner and Engineer.

D. Complement existing power service capacity and characteristics as required.

E. Provide power outlets for construction operations, with branch wiring and distribution boxes located as required. Provide flexible power cords as required.

F. Provide main service disconnect and over-current protection at convenient location.

G. Permanent convenience receptacles may be used during construction.

H. Provide adequate distribution equipment, wiring, and outlets to provide single phase branch circuits for power and lighting as necessary for Work.

I. Provide power outlets for construction operations as required by Work. Outlets shall be GCFI-rated and fed from a dedicated minimum 115-volt, 20-ampere circuit. Number of outlets per circuit shall be in accordance to the NEC. Provide flexible power cords as required. Power outlets provided shall be properly sized and rated to operate in tunnel ambient temperature and conditions.

1.02 TEMPORARY LIGHTING FOR CONSTRUCTION PURPOSES

A. Provide and maintain adequate lighting for construction operations.

B. Maintain lighting and provide routine repairs.

C. Permanent building lighting may be used during construction.

1.03 TEMPORARY HEATING

A. Existing facilities shall not be used.

B. Provide and pay for heating devices and heat as needed to maintain specified conditions for construction operations. Prior to operation of permanent equipment for temporary heating purposes, verify that installation is approved for operation, equipment is lubricated and filters are in place. Provide and pay for operation, maintenance, and regular replacement of filters and worn or consumed parts.

D. Maintain minimum ambient temperature of 50ºF (10ºC) in areas where construction is in progress, unless indicated otherwise in product sections.

1.04 TEMPORARY VENTILATION

A. Ventilate enclosed areas to achieve curing of materials, to dissipate humidity, and to prevent accumulation of dust, fumes, vapors, or gases.

B. Use existing ventilation equipment. Extend and supplement equipment with temporary fan units as required to maintain clean air for construction operations.

1.05 TELEPHONE SERVICE

A. Provide, maintain, and pay for telephone service to field office at time of project mobilization. Alternately, equip key points of contact with mobile telephones.

1.06 TEMPORARY WATER SERVICE

A. Provide potable water for workers. Do not use Owner’s existing water service for drinking water.

B. Owner will provide temporary water connections required for construction activities from 1.5” yard hydrant or hose bibs.

1.07 TEMPORARY SANITARY FACILITIES

A. Provide and maintain required facilities and enclosures. Existing facility use is not permitted. Provide at time of project mobilization.

B. At end of construction, return facilities to same or better condition as original condition.

1.08 FIELD OFFICES AND SHEDS

A. At Contractor’s Option, provide weathertight office trailer with lighting, electrical outlets, heating, ventilation equipment and equipped with appropriate furniture to facilitate use and the work.

B. Locate offices and sheds a minimum distance of 30' (10 m) from existing structures in contractor laydown area as directed by Owner.

C. Permanent facilities shall not be used for field offices or for storage.

D. Environmental control, storage spaces: Heating and ventilation as needed to maintain products in accordance with Contract Documents; adequate lighting for maintenance and inspection of products.

E. Storage areas and sheds: Size to storage requirements for products of individual Sections, allowing for access and orderly provision for maintenance and for inspection of products to requirements of Section 01 60 00.

F. Preparation: Fill and grade sites for temporary structures to provide drainage away from buildings.

G. Employee residential occupancy: Not allowed on Owner's property.

H. Maintenance and cleaning:
   1. Periodic cleaning and maintenance for office and storage areas.
   2. Maintain approach walks free of mud, water, and snow.

I. Removal: At completion of Work remove buildings, foundations, utility services, and debris. Restore areas.

1.09 VEHICULAR ACCESS

A. Construct temporary access roads from public thoroughfares to serve construction area, of a width and load bearing capacity to provide unimpeded traffic for construction purposes.

B. Construct temporary bridges and culverts to span low areas and allow unimpeded drainage.

C. Extend and relocate as Work progress requires, provide detours as necessary for unimpeded traffic flow.

D. Location approved by Owner**.**

E. Provide unimpeded access for emergency vehicles. Maintain 20' (6 m) width driveways with turning space between and around combustible materials.

F. Provide and maintain access to fire hydrants and control valves free of obstructions.

G. Provide means of removing mud from vehicle wheels before entering streets.

H. On-site roads may be used for construction traffic. Tracked vehicles not allowed on paved areas. Contractor shall repair any damage to roads caused by construction activity to original or better condition.

I. Contractor's principal vehicular access to plant site will be via plant's southern drive and through plant's south gate.

1.10 PARKING

A. Parking is limited in plant vicinity. Construction personnel shall not park in plant front parking lot. Park in areas authorized by Owner.

B. Do not allow heavy vehicles or construction equipment in parking areas.

C. Maintenance:
1. Maintain traffic and parking areas in a sound condition free of excavated material, construction equipment, products, mud, snow, and ice.
2. Maintain existing and permanent paved areas used for construction; promptly repair breaks, potholes, low areas, standing water, and other deficiencies, to maintain paving and drainage in original, or specified, condition.

D. Removal, repair:
1. Remove temporary materials and construction at Substantial Completion. Gravel surface parking shall be left in place for future Work.
2. Remove underground work and compacted materials to a depth of 2'' (600 mm); fill and grade site as specified.
3. Repair existing facilities damaged by use, to original condition.

E. Mud from site vehicles: Provide means of removing mud from vehicle wheels before entering streets.

1.11 PROGRESS CLEANING AND WASTE REMOVAL

A. Maintain areas free of waste materials, debris, and rubbish. Maintain site in a clean and orderly condition.

B. Remove debris and rubbish from pipe chases, plenums, attics, crawl spaces, and other closed or remote spaces, prior to enclosing the space.

C. Broom and vacuum clean interior areas prior to start of surface finishing, and continue cleaning to eliminate dust.

D. Collect and remove waste materials, debris, and rubbish from site weekly and dispose off-site.

E. Open free-fall chutes are not permitted. Terminate closed chutes into appropriate containers with lids.

1.12 PROJECT IDENTIFICATION

A. Project identification sign:
   1. One painted sign of size, construction, and design as shown on Drawings.
   2. Size lettering to provide legibility from at least 30' (9 m) distance.
   3. Content:
      a. Project title, *****logo***** and name of Owner as indicated on Contract Documents.
      b. Names and titles of authorities.
      c. Names and titles of Engineer and Consultants.
      d. Name of prime Contractor and major subcontractors.
   4. Graphic design, logo, name, and byline colors, style of lettering: As shown on Drawings.

B. Project informational signs:
   1. Painted informational signs of same colors and lettering as project identification sign, or standard products; size lettering to provide legibility from at least 30' (9 m) distance.
   2. Provide at each field office, storage shed, and directional signs to direct traffic into and within site. Relocate as Work progress requires.
   3. No other signs are allowed without Owner permission except those required by law.

C. Design sign and structure to withstand 60 miles/hr (100 km/hr) wind velocity.

D. Sign painter: Experienced as a professional sign painter for minimum 3 years.

E. Finishes, painting: Adequate to withstand weathering, fading, and chipping for duration of construction.

F. Sign materials:
   1. Structure and framing: New, wood, structurally adequate.
   2. Sign surfaces: Exterior grade plywood with medium density overlay, minimum 3/4" (19 mm) thick, standard large sizes to minimize joints.
   3. Rough hardware: Galvanized, aluminum or brass.
   4. Paints and primers: As shown on Drawings.

G. Installation:
   1. Install project identification sign within 21 days after date fixed by Notice to Proceed.
   2. Erect at location of high public visibility adjacent to main entrance to site.*****
   3. Erect supports and framing on secure foundation, rigidly braced and framed to resist wind loadings.
   4. Install sign surface plumb and level, with butt joints. Anchor securely.
   5. Paint exposed surfaces of sign, supports, and framing.

H. Maintenance: Maintain signs and supports clean, repair deterioration and damage.

I. Removal: Remove signs, framing, supports, and foundations at completion of Project and restore area.

1.13 BARRIERS

A. Provide barriers to prevent unauthorized entry to construction areas and to protect existing facilities and adjacent properties from damage from construction operations.

B. Provide protection for plants designated to remain. Replace damaged plants.

C. Protect nonowned vehicular traffic, stored materials, site, and structures from damage.

1.14 ENCLOSURES AND FENCING

A. Construction: At Contractor's option, provide chain link fencing or plastic construction netting to secure Contractor’s equipment and construction supplies.

B. Provide temporary barricades and fencing as necessary to secure the work and for personnel safety.

C. Exterior enclosures:
   1. Provide temporary insulated weathertight closure of exterior openings to accommodate acceptable working conditions and protection for products, to allow for temporary heating and maintenance of required ambient temperatures identified in individual specification sections, and to prevent entry of unauthorized persons.
   2. Provide access doors with self-closing hardware and locks.

D. Interior enclosures:
   1. Provide temporary partitions as necessary to separate work areas from Owner occupied areas, to prevent penetration of dust and moisture into Owner occupied areas, and to prevent damage to existing materials and equipment.
   2. Construction: Framing and reinforced polyethylene sheet materials with closed joints and sealed edges at intersections with existing surfaces:
      a. STC rating of 35 in accordance with ASTM E90.
      b. Maximum flame spread rating of 75 in accordance with ASTM E84.

1.15 SECURITY

A. Security program:
   1. Provide security program and facilities to protect Work, existing facilities, and Owner’s operation from unauthorized entry, vandalism, and theft. Coordinate with Owner’s security program.
   2. Initiate program in coordination with Owner's existing security system at project mobilization.
   3. Maintain program throughout construction period until Owner acceptance which precludes need for Contractor security.

B. Entry control:
   1. Restrict entrance of persons and vehicles into Project site and existing facilities.
   2. Allow entrance only to authorized persons with proper identification.
   3. Maintain daily log of workers and visitors, make available to Owner on request.
   4. Provide roster of workers on site for day to Owner each work day in morning within 1 hour of workday start.
   5. Owner will control entrance of persons and vehicles related to Owner's operations.

1.16 WATER CONTROL

A. Grade site to drain. Maintain excavations free of water. Provide, operate, and maintain pumping equipment.

B. Protect site from puddling or running water.

1.17 DUST CONTROL

A. Execute Work by methods to minimize raising dust from construction operations.

B. Provide positive means to prevent air-borne dust from dispersing into atmosphere.

C. Provide temporary sheeting and other methods to minimize dust migration from construction zones into nonconstruction areas of Owner’s building.

D. Promptly clean up dust and debris as work progresses to minimize tracking into non-construction zones.

1.18 EROSION AND SEDIMENT CONTROL

A. Plan and execute construction by methods to control surface drainage from cuts and fills, from borrow and waste disposal areas. Prevent erosion and sedimentation.

B. Minimize amount of bare soil exposed at one time.

C. Provide temporary measures such as berms, dikes, and drains, to prevent water flow.

D. Construct fill and waste areas by selective placement to avoid erosive surface silts or clays.

E. Periodically inspect earthwork to detect evidence of erosion and sedimentation; promptly apply corrective measures.

1.19 NOISE CONTROL

A. Provide methods, means, and facilities to minimize noise produced by construction operations.

B. Coordinate with Owner on when to perform especially noisy activities.

1.20 PEST AND RODENT CONTROL

A. Provide methods, means, and facilities to prevent pests, insects, and rodents from accessing or invading premises.

1.21 POLLUTION CONTROL

A. Provide methods, means, and facilities to prevent contamination of soil, water, and atmosphere from discharge of noxious, toxic substances, and pollutants produced by construction operations.

1.22 REMOVAL OF UTILITIES, FACILITIES, AND CONTROLS

A. Remove temporary utilities, equipment, facilities, materials, prior to Substantial Completion inspection.

B. Remove underground installations to a minimum depth of 2' (600 mm).

C. Clean and repair damage caused by installation or use of temporary work.

D. Restore existing and permanent facilities used during construction to original condition.

PART 2 PRODUCTS

NOT USED

PART 3 EXECUTION

NOT USED

END OF SECTION

PART 1 GENERAL

1.01 PRODUCTS

A. Provide products of qualified manufacturers suitable for intended use. Provide products of each type by a single manufacturer unless specified otherwise.

B. Do not use materials and equipment removed from existing premises, except as specifically permitted by the Contract Documents.

C. Provide interchangeable components of the same manufacturer for components being replaced.

1.02 PRODUCT DELIVERY REQUIREMENTS

A. Transport and handle products in accordance with manufacturer's instructions.

B. Promptly inspect shipments to ensure that products comply with requirements, quantities are correct, and products are undamaged.

C. Provide equipment and personnel to handle products by methods to prevent soiling, disfigurement, or damage.

1.03 RECEIVING, UNLOADING AND STORING

A. Receive and unload shipments to plant site from suppliers of equipment under this Contract and for Owner-furnished equipment.

B. Unload equipment as soon as possible after arrival.

C. Pay freight car and truck demurrage, detention, and any other costs which may be billed to Owner due to failure to unload cars or trucks within time required by freight companies.

D. Provide physical protection for equipment placed in storage.
   1. Store and maintain materials and equipment after receipt until completed installation is accepted by Owner. Such storage and maintenance shall be in accordance with manufacturer's recommendations and requirements of these Specifications. Provide materials, equipment, and labor required for such storage and maintenance. Contractor shall be accountable for any deterioration of materials or equipment occasioned by improper storage or maintenance, and shall recondition, repair, or replace any such materials or equipment without addition cost to Owner.
   2. Stored equipment shall be supported above ground and shall be covered with canvas or other heavy-duty sheeting. Cover shall be securely fastened and shall be replaced if torn or otherwise damaged during storage period.
   3. Motors shall be stored in dry, warm place and in accordance with manufacturer's recommendations. Motors over 20 hp shall have shaft rotated 90º each month. Provide Engineer with evidence that this requirement is met.
   4. Desiccant shall be maintained between cover and motor frames on motors. Provide desiccant of type permitting visual determination of condition of desiccant. Replace desiccant when it becomes ineffective.
   5. Following items shall be stored in weatherproof building complete with bins for storage of small pieces of equipment. Heat to a minimum of 50ºF (10°C). Storage inside of existing treatment plant not available.
      a. Electronic instruments and cabinets.
      b. Electrical equipment with general-purpose enclosures.
      c. Insulation materials.
      d. Rotating equipment.
      e. Miscellaneous electronic equipment, gaskets, and small, machined parts.
      f. Instruments and controls.

E. Inspect stored equipment weekly. Renew protective coatings as necessary to preserve fitness of equipment.

F. Contractor shall take custody of equipment and materials received and shall be solely responsible for damage and shortages until acceptance of Contractor's work by Owner.

G. Unload equipment as soon as possible after arrival. Contractor shall pay freight railcar and truck demurrage, detention, and any other costs which may be billed to Owner due to failure to unload railcars or trucks within time required by freight companies.

H. Use of bare wire rope slings for unloading and handling equipment and materials is prohibited without Owner approval.

I. Storage areas will be allocated by Owner for Contractor's use. Equipment shall be stored in assigned lay-down areas.

J. Equipment and materials shall be stored and maintained in accordance with manufacturer's recommendations and these specifications.

K. Provide physical protection for equipment placed in storage.
   1. Stored equipment shall be supported above ground and shall be covered with canvas or other heavy-duty sheeting. Cover shall be securely fastened and shall be replaced if torn or otherwise damaged during storage period.
   2. Motors:
      a. Store in dry, warm place (minimum 50ºF).
      b. Space heaters shall be connected upon receipt on site and maintained. Space heaters shall not be connected utilizing extension cords. Use of multi conductor cable only.
      c. Rotate motors over 20 hp 90º each month or as directed by manufacturer.
      d. Perform a mega-ohm meter test on each medium voltage motor winding to frame utilizing a 10kV mega-ohm meter. Perform test each month and record motor serial number, test values, confirmation of space heaters operational, and signature of tester.
      e. Provide Owner with written test reports that this requirement is met when requested.
   3. Following items shall be stored in weatherproof, heated (minimum 50ºF) building complete with bins for storage of small pieces of equipment. Storage inside of existing plant will not be available.
      a. Electronic instruments and cabinets.
      b. Electrical equipment with general purpose enclosures.
      c. Insulation materials.
      d. Rotating equipment.
      e. Miscellaneous electronic equipment, gaskets, and small machined parts.
      f. Instruments and controls.
      g. Protection panels.

L. Inspect stored equipment weekly and document activities performed. Renew protective coatings as necessary to preserve fitness of equipment.

M. Contractor shall provide materials, equipment, and labor required for such storage and maintenance. Contractor shall be accountable for any deterioration of materials or equipment occasioned by improper storage or maintenance, and shall recondition, repair, or replace any such materials or equipment without additional cost to Owner.

N. Electrical equipment or equipment with any electrical components stored outdoors shall be supported at least 12" above ground.

1.04 GENERAL STORAGE

A. Store products immediately on delivery in accordance with manufacturer's instructions, with seals and labels intact. Protect until installed.

B. Arrange storage in manner to provide access for maintenance of stored items and for inspection.

1.05 ENCLOSED STORAGE

A. Store products subject to damage by elements in substantial weathertight enclosures.

B. Maintain temperature and humidity within ranges required by manufacturer's instructions.

C. Provide humidity control and ventilation for sensitive products, as required by manufacturer's instructions.

D. Store unpacked and loose products on shelves, in bins, or in neat groups of like items.

1.06 EXTERIOR STORAGE

A. Provide substantial platforms, blocking, or skids, to support fabricated products above ground; slope to provide drainage. Protect products from soiling and staining.

B. For products subject to discoloration or deterioration from exposure to elements, cover with impervious sheet material. Provide ventilation to avoid condensation.

C. Store loose granular materials on clean, solid surfaces such as pavement, or on rigid sheet materials, to prevent mixing with foreign matter.

D. Provide surface drainage to prevent flow or ponding of rainwater.

E. Prevent mixing of refuse or chemically injurious materials or liquids.

1.07 MAINTENANCE OF STORAGE

A. Periodically inspect stored products on scheduled basis. Maintain log of inspections, make available to Engineer on request.

B. Verify storage facilities comply with manufacturer's product storage requirements.

C. Verify manufacturer required environmental conditions are maintained continually.

D. Verify surfaces of products exposed to elements are not adversely affected and if weathering of finishes is acceptable under requirements of Contract Documents.

1.08 MAINTENANCE OF EQUIPMENT STORAGE

A. For mechanical and electrical equipment in long-term storage, manufacturer's service instructions shall accompany each item, with notice of enclosed instructions shown on exterior of package.

B. Service equipment on regularly scheduled basis, maintaining log of services; submit as record document.

1.09 PRODUCTS LIST

A. Within 30 days after effective date of Agreement, submit complete list of major products which are proposed for installation electronically to Engineer.

B. Tabulate products by Specification section number and title.

C. For products specified only by reference standards, list for each such product:
   1. Name and address of manufacturer.
   2. Trade name.

3. Model or catalog designation.
4. Manufacturer's data:
   a. Reference standards.
   b. Performance test data.

1.10 PRODUCT OPTIONS

A. For products specified only by reference standard, select product meeting that standard, by any manufacturer.

B. For products specified by naming several products or manufacturers, select any one of products and manufacturers named which complies with Specifications.

C. For products specified by naming one or more products or manufacturers and stating "or equal," submit request as for substitutions for any product or manufacturer which is not specifically named in accordance with Section 01 25 13.

D. For products specified by naming only one product and manufacturer, there is no option and no substitution will be allowed.

E. Whenever Specifications call for item by manufacturer's name and type and additional features of item are specifically required by Specifications, additional features specified shall be provided whether or not they are normally included in standard manufacturer's item listed.

PART 2 PRODUCTS

NOT USED

PART 3 EXECUTION

NOT USED

END OF SECTION

PART 1 GENERAL

1.01 SUBSTANTIAL COMPLETION

A. When Contractor considers Work or designated portion thereof is substantially complete, submit written notice, with list of items to be completed or corrected.

B. Substantial completion will not be considered until:
   1. Process equipment and systems are substantially complete, functioning, tested, and operating.
   2. Electrical, control, and mechanical systems are substantially complete, functioning, tested, and operating.
   3. Miscellaneous work such as sitework, and architectural/structural work is complete aside from minor finish work.

C. Within reasonable time, Engineer will inspect to determine status of completion.

D. Should Engineer determine that Work is not substantially complete, it will promptly notify Contractor in writing, giving reasons therefor.

E. Contractor shall remedy deficiencies, and send second written notice of Substantial Completion, and Engineer will reinspect Work.

F. When Engineer determines that Work is substantially complete, it will prepare Certificate of Substantial Completion in accordance with General Conditions.

1.02 FINAL COMPLETION

A. When Contractor considers Work is complete, it shall submit written certification that:
   1. Contract Documents have been reviewed.
   2. Work has been inspected for compliance with Contract Documents.
   3. Work has been completed in accordance with Contract Documents, and deficiencies listed with Certificate of Substantial Completion have been corrected.
   4. Equipment and systems have been tested in presence of Owner's representative and are operational.
   5. Work is complete and ready for final inspection.

B. Engineer will inspect to verify status of completion with reasonable promptness.

C. Should Engineer consider that Work is incomplete or defective, it will promptly notify Contractor in writing, listing incomplete or defective Work.

D. Contractor shall take immediate steps to remedy deficiencies and send second written certification that Work is complete, and Engineer will reinspect Work.

E. When Engineer finds Work is acceptable, it will consider closeout submittals.

1.03 REINSPECTION FEES

A. Should Engineer perform reinspections due to failure of Work to comply with claims made by Contractor, Owner will compensate Engineer for such additional services and deduct amount of such compensation from final payment to Contractor.

1.04 CLOSEOUT PROCEDURES

A. Submit written certification that Contract Documents have been reviewed, Work has been inspected, and that Work is complete in accordance with Contract Documents and ready for Engineer's review.

B. Provide submittals to Engineer that are required by governing or other authorities.

C. Submit project record documents.

D. Submit operation and maintenance data.

E. Provide Owner instruction and training and submit record of training activities

F. Submit warranty and bond information.

G. Submit final Application for Payment identifying total adjusted Contract Sum, previous payments, and sum remaining due. Provide detailed statement of contract price adjustments with payment application.

H. Provide evidence of payment and release of liens in accordance with General and Supplementary Conditions.

I. Submit Consent of Surety to final payment.

J. Submit Certificates of insurance for products and completed operations in accordance with supplementary conditions.

K. Owner will occupy portions of the building as specified in Section 01 11 00.

1.05 FINAL CLEANING

A. Execute final cleaning prior to final project assessment.

B. Clean interior and exterior glass, surfaces exposed to view; remove temporary labels, stains and foreign substances, and polish transparent and glossy surfaces.

C. Clean equipment and fixtures to a sanitary condition with cleaning materials appropriate to the surface and material being cleaned.

D. Clean filters of operating equipment.

E. Clean debris from roofs, gutters, downspouts, and drainage systems.

F. Clean site; sweep paved areas, rake clean landscaped surfaces.

G. Remove waste and surplus materials, rubbish, and construction facilities from the site.

1.06 STARTING OF SYSTEMS

A. Coordinate schedule for start-up of various equipment and systems.

B. Notify Engineer 7 days prior to start-up of each item.

C. Verify that each piece of equipment or system has been checked for proper lubrication, drive rotation, belt tension, control sequence, and for conditions which may cause damage.

D. Verify tests, meter readings, and specified electrical characteristics agree with those required by equipment or system manufacturer.

E. Verify that wiring and support components for equipment are complete and tested.

F. Execute start-up under supervision of applicable manufacturer's representative in accordance with manufacturers' instructions and Section 01 43 33.

G. When specified in individual specification Sections, require manufacturer to provide authorized representative to be present at site to inspect, check, and approve equipment or system installation prior to start-up, and to supervise placing equipment or system in operation.

H. Submit a written report in accordance with Section 01 33 00 that equipment or system has been properly installed and is functioning correctly.

1.07 PROTECTING INSTALLED CONSTRUCTION

A. Protect installed Work and provide special protection where specified in individual specification sections.

B. Provide temporary and removable protection for installed products. Control activity in immediate work area to prevent damage.

C. Provide protective coverings at walls, projections, jambs, sills, and soffits of openings.

D. Protect finished floors, stairs, and other surfaces from traffic, dirt, wear, damage, or movement of heavy objects, by protecting with durable sheet materials.

E. Prohibit traffic or storage upon waterproofed or roofed surfaces. If traffic or activity is necessary, obtain recommendations for protection from waterproofing or roofing material manufacturer.

F. Prohibit traffic from landscaped areas.

1.08 PROJECT RECORD DOCUMENTS

A. Maintain on site one set of the following record documents; record actual revisions to the Work:
   1. Drawings.
   2. Specifications.
   3. Addenda.
   4. Change Orders and other modifications to the Contract.
   5. Reviewed Shop Drawings, Product Data, and Samples.
   6. Manufacturer's instruction for assembly, installation, and adjusting.

B. Ensure entries are complete and accurate, enabling future reference by Owner.

C. Store record documents separate from documents used for construction.

D. Record information concurrent with construction progress, not less than weekly.

E. Specifications: Legibly mark and record at each product section description of actual products installed, including the following:
   1. Manufacturer's name and product model and number.
   2. Product substitutions or alternates utilized.
   3. Changes made by Addenda and modifications.

F. Record Drawings and Shop Drawings: Legibly mark each item to record actual construction including:
   1. Measured depths of foundations in relation to finish main floor datum.

2. Measured horizontal and vertical locations of underground utilities and appurtenances, referenced to permanent surface improvements.
3. Measured locations of internal utilities and appurtenances concealed in construction, referenced to visible and accessible features of the Work.
4. Field changes of dimension and detail.
5. Details not on original Contract Drawings.

G. Submit documents to Engineer with claim for final Application for Payment.

1.09 SPARE PARTS AND MAINTENANCE PRODUCTS

A. Provide spare parts, maintenance, and extra products in quantities specified in individual specification sections.

B. Deliver to Project site and place in location as directed; obtain receipt prior to final payment.

1.10 PRODUCT WARRANTIES AND PRODUCT BONDS

A. Obtain warranties and bonds executed in duplicate by responsible subcontractors, suppliers, and manufacturers, within 10 days after completion of the applicable item of work.

B. Execute and assemble transferable warranty documents and bonds from subcontractors, suppliers, and manufacturers.

C. Verify that documents are in proper form, contain full information, and are notarized.

D. Co-execute submittals when required.

E. Provide Table of Contents and assemble in 3-D side ring binder with durable plastic cover.

F. Submit prior to final Application for Payment.

G. Time of Submittals:
1. For equipment or component parts of equipment put into service during construction with Owner's permission, submit documents within 10 days after acceptance.
2. Make other submittals within 10 days after Date of Substantial Completion, prior to final Application for Payment.
3. For items of Work for which acceptance is delayed beyond Date of Substantial Completion, submit within 10 days after acceptance, listing date of acceptance as beginning of warranty or bond period.

1.11 MAINTENANCE SERVICE

A. Furnish service and maintenance of components indicated in specification sections during the warranty period.

B. Examine system components at a frequency consistent with reliable operation. Clean, adjust, and lubricate as required.

C. Include systematic examination, adjustment, and lubrication of components. Repair or replace parts whenever required. Use parts produced by the manufacturer of the original component.

D. Maintenance service shall not be assigned or transferred to any agent or Subcontractor without prior written consent of Owner.

PART 2 PRODUCTS

NOT USED

PART 3 EXECUTION

NOT USED

END OF SECTION

PART 1 GENERAL

1.01 SUBMITTALS

A. Shop Drawings: Drawing indicating proposed layout and utilization of Contractor's storage area for Owner approval. Drawing shall be maintained current and shall indicate location of all stored equipment and materials.

B. Quality assurance data:
1. Plan indicating location and extent of proposed field welding, and showing what provisions have been made for type of base metal, present stress conditions, and preheating requirements.
2. Proposed shoring or above floor load transfer structure for moving equipment across floors to final position. Documents shall be signed and sealed by Contractor's structural engineer.
3. Certificates for each welder, showing proof of qualifications as outlined in code, prior to any field welding, either temporary or permanent.
4. Duplicate copies of clearances of bearings aligned and amount of runout on couplings.
5. Monthly report indicating status of equipment, motor test reports and materials received. Report shall contain a log of equipment and materials and storage maintenance duties performed.

PART 2 PRODUCTS

2.01 EQUIPMENT

A. Provide dowel pins and shims necessary for leveling and doweling equipment to baseplates. Shims shall be stainless steel.

B. Provide bolting required to anchor equipment securely to building structural steel; holes required in structural steel shall be drilled; burning with cutting torch not allowed.

C. Provide expansion anchors where required, subject to review by Engineer. Use appropriate type of anchor devices on vibratory equipment.

D. Provide welding rods for field erection of equipment installed under this Contract.

E. Grout and material noted on Drawings as "by others," "by purchaser," "by Owner," or the like, necessary for equipment installation.

PART 3 EXECUTION

3.01 INSTALLATION PROCEDURES

A. Equipment shall be installed in strict accordance with manufacturer's recommendations.

B. Provide access space around equipment for service. Provide no less than minimum as recommended by manufacturer.

3.02 SPECIAL ERECTION PROCEDURES

A. Field welding to existing structural members shall conform to following requirements:
1. Conform to AWS D1.1.
2. Welding to high strength steels or preheating of highly stressed members will not normally be permitted.
3. Remove temporary welded attachments, grind area smooth, and apply 1 coat of primer to match existing primer.

B. Welding of piping shall conform to ASME B31.1 Code for Power Piping and ASME Boiler and Pressure Vessel Code, Section IX when either or both are applicable.

C. Remove any temporary attachments made to equipment. Grind area of attachment on equipment to smooth surface and apply 1 coat of primer to match existing primer.

3.03 FLOOR SHORING

A. Shore parts of structure for which design loading would be exceeded during construction or installation of equipment.

B. Protect flooring and other finished surfaces by means of heavy planking.

C. Remove shoring and repair any damage to floors or other parts of structures after equipment has been installed.

D. Method of shoring subject to review of Engineer.

3.04 CLEANING

A. Before assembly or erection, thoroughly clean equipment of temporary protective coatings and foreign materials; completely remove shop-applied flushing compounds.

B. Blow out with compressed air as required to remove foreign material.

C. After erection of equipment, clean external surfaces of oil, grease, dirt, or other foreign material; touch up shop paint, primer, and filler; leave surfaces smooth and ready for finish painting.

3.05 ALIGNING

A. Align equipment in accordance with manufacturer's recommendations.

B. Use shims of sheet and plate steel; use shims with laminations having individual layers not heavier than 0.015" (0.40 mm) for 1/32" (1 mm) to 1/8" (3 mm) directly under equipment.

C. Check alignment of equipment after piping and other external connections have been made and before equipment is placed in operation. Realign equipment as necessary.

D. After alignment, hot run and recheck alignment; drill and ream items of equipment and fasten to baseplates with tapered dowel pins.

E. Include costs for labor required to obtain alignment within allowable limits on equipment installed. This includes labor for any hanger adjustments required.

3.06 SUPPORTS

A. Provide devices to support equipment and piping, furnished or installed under this Contract. Refer to Section 20 05 29.

B. Fabricate supports of structural steel sections, plates, or rods arranged to provide rigid and sturdy mounting for equipment.

C. Provide connections or fasteners required between equipment supports and building structure.

D. Equipment foundation pads: As shown on Drawings.

E. Provide devices to support equipment piping and appurtenances where specific support is not detailed on Drawings. Support piping adjacent to equipment such that no weight is carried on equipment.

F. Support piping adjacent to equipment such that load transferred to equipment does not exceed manufacturer’s specified allowable load.

3.07 GROUTING

A. Place minimum of 1" (25 mm) nonshrink grout under equipment being mounted on concrete foundations unless specified otherwise. Refer to Section 03 00 10.

B. Determine quantity of grout required.

C. Entire space between top of foundation and bottom of equipment base shall be completely filled with grout, free of any voids.

D. Place no grout that has been allowed to set, after mixing, beyond time limitations set forth by grout manufacturer.

E. Remove and replace grout that shows cracking.

END OF SECTION

PART 1 GENERAL

1.01 OPERATING AND MAINTENANCE DATA REQUIREMENTS

A. Operating and maintenance data shall be in English language.

B. Compile product data and related information appropriate for Owner's maintenance and operation of products furnished under Agreement.

C. Prepare operating and maintenance data as specified in this section and as referenced in other pertinent sections of Specifications.

D. Instruct Owner's personnel in maintenance of products and in operation of equipment and systems.

1.02 QUALITY ASSURANCE

A. Preparation of data shall be done by personnel:
   1. Trained and experienced in maintenance and operation of described products.
   2. Familiar with requirements of this section.
   3. Skilled as technical writers to extent required to communicate essential data.
   4. Skilled as draftsmen competent to prepare required drawings.

1.03 FORM OF SUBMITTALS

A. Prepare data in form of an instructional manual for use by Owner's personnel.

B. Format:
   1. Sheet size: 8-1/2" x 11" minimum.
   2. Paper: 20 lb minimum, white, for typed pages.
   3. Text: Manufacturer's printed data, or neatly typewritten.
   4. Drawings:
      a. Provide reinforced punched binder tab, bind in with text.
      b. Larger size drawings shall be folded to 8-1/2” x 11”, and inserted into pockets.
   5. Provide fly-leaf for each separate product, or each piece of operating equipment.
      a. Provide typed description of product, and major component parts of equipment.
      b. Provide indexed tabs.
   6. Cover: Identify each volume with typed or printed title "OPERATING AND MAINTENANCE INSTRUCTIONS." List:
      a. Title of Project.
      b. Identity of separate structure as applicable.
      c. Identity of general subject matter covered in manual.
   7. Binders:
      a. Commercial quality 3-ring binders with durable and cleanable plastic covers.
      b. Maximum ring size: 1".
      c. When multiple binders are used, correlate data into related consistent groupings.

1.04 CONTENT OF MANUAL

A. Neatly typewritten table of contents for each volume, arranged in systematic order.
   1. Contractor, name of responsible principal, address, and telephone number.
   2. List of each product required to be included, indexed to content of volume.
   3. List, with each product, name, address, and telephone number of:
      a. Subcontractor or installer.
      b. Maintenance contractor, as appropriate.
      c. Identify area of responsibility of each.
      d. Local source of supply for parts and replacement and list of recommended spare parts.

4. Identify each product by product name and other identifying symbols as set forth in Contract Documents, including nameplate information and shop order numbers for each item of equipment furnished.

B. Product data:
   1. Include only those sheets which are pertinent to specific product.
   2. Annotate each sheet to:
      a. Clearly identify specific product or part installed.
      b. Clearly identify data applicable to installation.
      c. Delete references to inapplicable information.

C. Drawings:
   1. Supplement product data with Drawings as necessary to clearly illustrate:
      a. Relations of component parts of equipment and systems.
      b. Control and flow diagrams.
   2. Coordinate Drawings with information in Project record documents to assure correct illustration of completed installation.
   3. Do not use Project record documents as maintenance Drawings.

D. Written text, as required to supplement product data for particular installation.
   1. Organize in consistent format under separate headings for different procedures.
   2. Provide logical sequence of instructions for each procedure.

E. Copy of each warranty, Bond, and service contract issued.
   1. Provide information sheet for Owner's personnel, giving:
      a. Proper procedures in event of failure.
      b. Instances which might affect validity of warranties or Bonds.

1.05 MANUAL FOR EQUIPMENT AND SYSTEMS

A. Submit 3 copies of complete manual in final form and electronic copy in both Word and pdf format.

B. Contents, for each unit of equipment and system, as appropriate:
   1. Description of unit and component parts:
      a. Function, normal operating characteristics, and limiting conditions.
      b. Performance curves, engineering data, and tests.
      c. Complete nomenclature and commercial number of replaceable parts.
   2. Operating procedures:
      a. Startup, break-in, routine, and normal operating instructions.
      b. Regulation, control, stopping, shutdown, and emergency instructions.
      c. Summer and winter operating instructions.
      d. Special operating instructions.
   3. Maintenance procedures:
      a. Routine operations.
      b. Guide to "trouble-shooting."
      c. Disassembly, repair, and reassembly.
      d. Alignment, adjusting, and checking.
   4. Servicing and lubrication schedule: List of lubricants required.
   5. Manufacturer's printed operating and maintenance instructions.
   6. Description of sequence of operation by control manufacturer.
   7. Original manufacturer's parts list, illustrations, assembly drawings, and diagrams required for maintenance.
      a. Predicted life of parts subject to wear.
      b. Items recommended to be stocked as spare parts.
   8. As-installed control diagrams by controls manufacturer.
   9. Each contractor's coordination Drawings. As-installed color-coded piping diagrams.
   10. Chart of valve tag numbers, with location and function of each valve.
   11. List of original manufacturer's spare parts, manufacturer's current prices, and recommended quantities to be maintained in storage.

12. Other data as required under pertinent sections of Specifications.

C. Content, for each electrical and electronic system, as appropriate.
   1. Description of system and component parts:
      a. Function, normal operating characteristics, and limiting conditions.
      b. Performance curves, engineering data, and tests.
      c. Complete nomenclature and commercial number of replacement parts.
   2. Circuit directories of panelboards:
      a. Electrical service.
      b. Controls.
      c. Communications.
   3. As-installed color-coded wiring diagrams.
   4. Operating procedures:
      a. Routine and normal operating instructions.
      b. Sequences required.
      c. Special operating instructions.
   5. Maintenance procedures:
      a. Routine operations.
      b. Guide to "trouble-shooting."
      c. Disassembly, repair, and assembly.
      d. Adjustment and checking.
   6. Manufacturer's printed operating and maintenance instructions.
   7. List of original manufacturer's spare parts, manufacturer's current prices, and recommended quantities to be maintained in storage.
   8. Other data as required under pertinent sections of Specifications.

D. Prepare and include additional data when need for such data becomes apparent during instruction of Owner's personnel.

1.06 SUBMITTAL SCHEDULE

A. Preliminary draft:
   1. Submit 2 electronic copies to Engineer and Owner a minimum of 30 days in advance of when equipment is scheduled to be shipped to Owner’s site.
   2. Provide 1 copy shipped with equipment.

B. Submit 1 copy of completed data in final form 15 days prior to final inspection or acceptance. Copy will be returned after final inspection or acceptance, with comments.

C. Submit specified copies of approved data in final form 10 days after receipt of comments.

1.07 DEMONSTRATION AND INSTRUCTION OF OWNER'S PERSONNEL

A. Demonstrate operation and maintenance of products to Owner's personnel prior to date for Owner’s personnel taking over operation of the equipment.

B. Demonstrate Project equipment and instruct in a classroom environment onsite by a qualified manufacturer's representative who is knowledgeable about the Project.

C. Utilize operation and maintenance manuals as basis for instruction. Review contents of manual with Owner's personnel in detail to explain all aspects of operation and maintenance.

D. Demonstrate start-up, operation, control, adjustment, trouble-shooting, servicing, maintenance, and shutdown of each item of equipment at agreed time, at equipment location.

E. Prepare and insert additional data in operations and maintenance manuals when need for additional data becomes apparent during instruction.

F. Amount of time required for instruction on each item of equipment and system is that specified in individual sections.

PART 2 PRODUCTS

NOT USED

PART 3 EXECUTION

NOT USED

END OF SECTION

OPERATING AND MAINTENANCE MANUAL COVER DIAGRAM

SPINE	COVER	
CITY OF IOWA CITY	CITY OF IOWA CITY	36 pt 36 pt
BELT FILTER PRESSES	OPERATING AND MAINTENANCE MANUAL FOR BELT FILTER PRESSES	36 pt 36 pt 36 pt
	MANUFACTURER'S NAME MANUFACTURER'S ADDRESS	24 pt 24 pt
	STANLEY CONSULTANTS, INC. MUSCATINE, IOWA	14 pt 14 pt

1. Imprinting shall be in Arial font.
2. Spine printing shall be 12-point.
3. Cover printing shall be in point sizes indicated.

* If more than one volume is necessary, imprint cover with volume numbers.

PART 1 GENERAL

1.01 SECTION INCLUDES

A. Removal and disposal of existing structures, utilities, and road, and associated work including, but not limited to:
   1. Demolition and removal of miscellaneous construction and roadways.
   2. Demolition and removal of miscellaneous utilities.
   3. Demolition and removal of belt filter presses, sludge pumps, and polymer pumps.

B. Remove and legally dispose of items, except those identified for re-use.

1.02 MEASUREMENT AND PAYMENT

A. No separate measurement or payment will be made for demolition work under this contract except as specifically described and listed in Agreement. Include costs in connection with Work in lump sum Contract Price.

1.03 DEFINITIONS

A. Deconstruction: Disassembly of buildings for the purpose of recovering materials.

B. Construction and demolition (C&D) materials: Materials produced in the process of construction, renovation and/or demolition of structures, where structures include buildings, roads, and bridges. C&D materials typically include concrete, asphalt, wood, gypsum wallboard, paper, glass, rubble, and roofing materials. Also includes land clearing debris, such as stumps, rocks, and dirt.

C. Environmental pollution and damage: Presence of chemical, physical, or biological elements or agents which adversely affect human health or welfare; unfavorably alter ecological balances of importance to human or animal life; affect other species of importance to humanity; or degrade utility of environment for aesthetic, cultural or historical purposes.

D. Inert fill:
   1. Permitted facility that accepts inert waste such as asphalt and concrete exclusively for purpose of disposal.
   2. Inert solids and waste: Nonliquid solid waste including, but not limited to, soil and concrete, that does not contain hazardous substances or soluble pollutants at concentrations in excess of water-quality standards established by regional water board and does not contain significant quantities of decomposable solid waste.

E. Demolition waste: Building materials and solid waste resulting from construction, remodeling, repair, cleanup, or demolition operations that are not hazardous. Term includes, but is not limited to, asphalt concrete, portland cement concrete, brick, lumber, gypsum wallboard, cardboard and other associated packaging, roofing material, ceramic tile, carpeting, plastic pipe, and steel. The materials may include rock, soil, tree stumps, and other vegetative matter resulting from land clearing and landscaping for construction or land development projects.

F. Chemical waste: Includes petroleum products, bituminous materials, salts, acids, alkalis, herbicides, pesticides, organic chemicals and inorganic wastes.

G. Recycling: Process of sorting, cleansing, treating and reconstituting materials for purpose of using altered form in manufacture of new product. Recycling does not include burning, incinerating or thermally destroying solid waste.

H. Reuse: Use, in same or similar form as it was produced, of material which might otherwise be discarded.

I. Solid waste: Putrescible and nonputrescible solid, semisolid, and liquid wastes, including garbage, trash, refuse, paper, rubbish, ashes, industrial wastes, demolition and construction wastes, abandoned vehicles and parts thereof, discarded home and industrial appliances, dewatered, treated, or chemically fixed sewage sludge which is not hazardous waste, manure, vegetable or animal solid and semisolid wastes, and other discarded solid and semisolid wastes. "Solid waste" does not include hazardous waste, radioactive waste, or medical waste as defined or regulated by State law.

1.04 PRE-DEMOLITION MEETING

A. Conduct conference at Project site.

B. Arrange meeting no less than 10 days prior to demolition with Owner to review salvageable items to determine if Owner wants to retain ownership.

C. Review environmental goals of Project with Owner, subcontractors, and waste haulers and make proactive effort to increase awareness of these goals among all labor forces on site.

1.05 SCHEDULING

A. Perform Work in manner which will provide least interference and most protection to public and existing construction. Contractor's operations subject to approval by Owner prior to commencement of Work.

B. Carefully coordinate time and manner of demolition work with Engineer to assure continued operation of existing facilities and to maintain construction schedule requirements.

C. Schedule and perform work in accordance with following general sequence. Coordinate specific details of work with Owner. Owner's use of premises shall have priority over work Contract.

D. Take care to minimize outages of electrical systems.

E. Coordinate electrical system outages with Owner and service utility. Notify Owner in writing at least 72 hours prior to electrical outage. Indicate system to be disabled, areas affected, proposed date and time of outage, duration, and work to be performed.

F. Outages of following electrical systems shall be performed only with written permission of Owner.
   1. Power distribution.
   2. Fire alarm.
   3. Telephone.

1.06 INFORMATIONAL SUBMITTALS

A. Quality assurance data:
   1. Two weeks prior to any removal, submit demolition plan for review. Plans shall include sequence of performing proposed work, requirements for interruptions to public use of area, and requirements for Contractor use of public streets and facilities.
   2. Two copies of photographs taken of existing construction to remain. Include adjacent private properties that might be disturbed by demolition operations.

1.07 CLOSEOUT SUBMITTALS

A. Record drawings: Identify and accurately locate capped utilities and other subsurface structural, electrical, or mechanical conditions.

1.08 QUALITY ASSURANCE

A. Demolition firm qualifications: Engage licensed demolition contractor and an experienced firm that has successfully completed demolition Work similar to that indicated for this Project.

B. Temporary electrical construction necessary to maintain existing system during construction shall comply with NEC Article 590.

C. Regulatory requirements:
   1. Comply with governing EPA notification regulations before starting demolition. Comply with hauling and disposal regulations of authorities having jurisdiction. Obtain and pay for all permits required.
   2. Conform to applicable requirements of federal, state, and other governmental agencies for demolition work.

1.09 SITE CONDITIONS

A. Known underground piping, foundations, and other underground obstructions in vicinity of new construction are shown on Drawings.

B. Protect underground facilities encountered during excavation until it is determined whether they are active or inactive. Repair, without compensation, existing active facilities shown on Drawings damaged during operations.

C. Notify Owner of unexpected subsurface conditions and discontinue Work in area until Owner provides notification to resume Work.

PART 2 PRODUCTS

2.01 MATERIALS OWNERSHIP

A. Except for items or materials indicated to be reused, salvaged, reinstalled, or otherwise indicated to remain property of Owner, demolished materials shall become Contractor's property and shall be removed, recycled, or disposed from Project Site in appropriate and legal manner.

PART 3 EXECUTION

3.01 VERIFICATION OF CONDITIONS

A. Inspect buildings and structures where demolition is required. Inspect existing Drawings of buildings and structures; Drawings are available from Owner. Contractor shall be familiar with items that require demolition and patching.

B. Notify Owner of any deviation before proceeding with work.

C. Coordinate the removal of mechanical equipment with other trades so as not to affect the operation of existing systems.

D. Perform work in manner which will provide least interference to utility services including electrical, gas, building utilities, and others.

E. Provide and maintain temporary building temperature, humidity, and ventilation systems to provide ambient conditions for work, prevent condensation, and prevent accumulation of dust, fumes, and gases.

F. Perform excavation and dewatering necessary to accomplish Work.

G. Determine actual Site conditions, extent to which demolition is required, and method of demolition.

H. Schedule work with Owner and work in other parts of these Contract Documents.

I. Verify that utilities have been disconnected and capped.

J. Survey existing conditions and correlate with requirements indicated to determine extent of demolition and recycling required.

K. Survey condition of the building to determine whether removing any element might result in structural deficiency or unplanned collapse of portion of structure or adjacent structures during demolition.

L. Perform surveys as Work progresses to detect hazards resulting from demolition activities.

3.02 PREPARATION

A. Prepare drawings, documents, and applications and obtain government agency approvals and permits required for demolition activities.

B. Conduct demolition operations and remove C&D materials to ensure minimum interference with roads, streets, walks, and other adjacent occupied and utilized facilities.

C. Do not close or obstruct streets, walks, or other adjacent occupied or utilized facilities without permission from authorities having jurisdiction. Provide alternate routes around closed or obstructed traffic ways if required by governing regulations.

D. Conduct demolition operations to prevent injury to people and damage to adjacent buildings and facilities to remain. Ensure safe passage of people around demolition area.
   1. Erect temporary protection, such as walks, fences, railings, canopies, and covered passageways, where required by authorities having jurisdiction.
   2. Protect existing Site improvements, appurtenances, and landscaping that are designated to remain in place.
   3. Repair any damage caused by demolition operations at Contractor’s expense.

E. Provide and maintain interior and exterior shoring, bracing, or structural support to preserve stability and prevent movement, settlement, or collapse of buildings to be demolished and adjacent buildings to remain. Strengthen or add new supports when required during progress of demolition.

3.03 EXPLOSIVES

A. Explosives: Use of explosives not permitted.

3.04 ENVIRONMENTAL CONTROLS

A. Comply with federal, state and local regulations pertaining to water, air, solid waste, recycling, chemical waste, sanitary waste, sediment and noise pollution.

B. Protection of natural resources: Preserve natural resources within project boundaries or restore to equivalent condition.
   1. Confine demolition activities to areas defined by public roads, easements, and work area limits indicated on drawings.
   2. Temporary construction: Remove indications of temporary construction facilities, such as haul roads, work areas, structures, stockpiles or waste areas.
   3. Water resources:
      a. Comply with applicable regulations concerning direct or indirect discharge of pollutants to underground and natural surface waters.
      b. Oily substances:
         1) Prevent oily or other hazardous substances from entering ground, drainage areas, or local bodies of water in such quantities as to affect normal use, aesthetics, or produce measurable ecological impact on area.
         2) Store and service construction equipment at areas designated for collection of oil wastes.
   4. Dust control, air pollution, and odor control: Prevent creation of dust, air pollution and odors:
      a. Use temporary enclosures and other appropriate methods to limit dust and dirt rising and scattering in air to lowest practical level.
      b. Store volatile liquids, including fuels and solvents, in closed containers.

c. Properly maintain equipment to reduce gaseous pollutant emissions.

5. Disposal practices and waste hauling:
   a. Legally transport and dispose of materials that cannot be delivered to source-separated or mixed recycling facility to transfer station or disposal facility that can legally accept materials for purpose of disposal.
   b. Use permitted waste hauler or Contractor's trucking services and personnel. To confirm valid permitted status of waste haulers, contact state or local waste management agency.
   c. Become familiar with conditions for acceptance of new construction, excavation and demolition materials at recycling facilities, prior to delivering materials.
   d. Deliver to facilities that can legally accept new construction, excavation and demolition materials for purpose of re-use, recycling, composting, or disposal.
   e. Do not burn, bury or otherwise dispose of rubbish and waste materials on project site.
6. Re-use and donation options: Implement re-use program to greatest extent feasible.
7. Revenue:
   a. Revenues or other savings obtained from recycled, re-used, or salvaged materials shall accrue to Contractor unless otherwise noted in Contract Documents.
   b. Remove and transport C&D materials in manner that will prevent spillage on adjacent surfaces, streets, and areas or dust being emitted into atmosphere.
   c. Clean adjacent streets of dust, dirt, and C&D materials caused by demolition operations. At end of each work day, return adjacent areas to condition existing before start of demolition.

3.05 PROTECTION

A. Protect existing facilities from damage by falling debris, dust, and construction operations.

B. Provide shoring and bracing where necessary to support existing construction and protect personnel and facilities during demolition operation.

3.06 DEMOLITION - GENERAL

A. Building demolition: Use methods required to complete Work within limitations of governing regulations and as follows:
   1. Locate demolition equipment throughout building and remove debris and materials so as not to impose excessive loads on supporting walls, floors, or framing.
   2. Demolish concrete and masonry in sizes that will be suitable for acceptance at recycling or disposal facilities.
   3. Remove structural framing members and lower to ground by method suitable to avoid free fall and to prevent ground impact or dust generation.
   4. Break up and remove concrete slabs on grade in small sizes, suitable for acceptance at recycling or disposal facilities, unless otherwise shown to remain.
   5. Remove all disconnected, abandoned utilities on site.

B. Below-grade construction: Demolish foundation walls and other below-grade construction, as follows:
   1. Completely remove below-grade construction, including foundation walls and footings unless shown otherwise on drawings.
   2. Break up and completely remove below-grade concrete slabs, in small sizes, suitable for acceptance at recycling or disposal facilities.
   3. Below-grade areas: Completely fill below-grade areas and voids resulting from building demolition operations with satisfactory soil materials.

C. Damages: Promptly repair damages to adjacent facilities caused by demolition operations.

D. Remove existing construction as specified and shown and as required to permit new construction.

E. Perform removal in manner that will minimize dust, noise, and other nuisance. Maintain haul routes for disposal of material clean and free of debris.

F. Remove existing construction carefully providing for neat and orderly junctions at construction to remain in place. Final appearance of exposed surfaces shall be similar and equal to that of adjacent existing work. Grind off rough surfaces to remove sharp projections.

G. Perform demolition operations in manner that in no way endangers personnel, public, existing structures, utilities, roadways, or facilities not to be demolished.

H. Any portion of existing construction whether structural or accessory which has become unstable through removal of other parts of construction shall be removed as soon as practical and no such unstable part shall be left free-standing or inadequately braced against causes of collapse at end of each day's work.

I. No demolition shall be performed on piping, electrical circuits, or equipment until system has been isolated by Owner. Contractor shall verify isolation of system.

J. Contractor shall relocate existing active miscellaneous piping, conduit, and electrical circuits and devices not detailed on Drawings but required for installation of equipment and items installed by this Contract.

K. To reduce fire hazards during demolition, Contractor shall:
   1. Before removing any part of any building, remove volatile or flammable materials, such as fuel oil, gasoline, kerosene, benzene, cleaning fluids, paints, thinners, cloth, loose paper, combustible trash, coal, and similar materials which might serve as ready fuel for small fires.
   2. Maintain stairways in usable condition to highest or lowest level until that portion of structure is removed.
   3. Maintain sufficient number of fire extinguishers to check and extinguish small fires in areas where Work is being performed.
   4. Wherever cutting torch or other equipment which might cause fire is being used, fire extinguishers shall be kept nearby and ready for instant use. Users of such equipment shall be instructed in proper method of preventing fires and extinguishing fire.
   5. Fires will not be permitted in Project area, except that small fires for warming of personnel may be permitted in suitable burning equipment arranged to prevent release of embers or sparks. Burning equipment and operation thereof must be approved by Iowa City Fire Department.
   6. Burning of waste lumber and other building materials or trash on Site will not be permitted.

L. Use of cranes and wrecking balls for demolition work permitted as long as following conditions are met:
   1. Machinery, cables, booms, and other equipment shall pass applicable safety inspections.
   2. Crane boom may not be used within 20' of overhead power lines.
   3. Wrecking ball or clamshell demolition work shall not cause debris to be kicked outward away from demolition area.
   4. Operations do not damage adjacent construction.

M. Use of blasting not permitted.

N. Provide temporary personnel and vehicle protection at openings or ledges made by demolition.

O. Double saw cut concrete and asphalt removal areas so remaining edges are clean and undamaged.

3.07 DEMOLITION OF ARCHITECTURAL, STRUCTURAL, AND SITE MATERIALS

A. Remove as shown and specified or as required to permit new construction.

B. Structural parts of buildings, such as columns, beams, and joists supporting floor of any story shall be left in place until walls, flooring, and partitions of that story are completely removed, beginning at top and working downward. Exception to this requirement will be made in case of nonrigid frames or concrete buildings.

C. If Contractor elects to use an alternate procedure for progressive or simultaneous wrecking of all parts of building, Contractor's proposed method shall not increase danger to Contractor's personnel, Owner's personnel, or to adjacent structures. Contractor shall notify Owner in writing of any such alternate procedure proposed before implementing such procedures.

D. No wall or part thereof shall be permitted to fall outwardly from any building or into plant basement or floor except through chutes or by other controlled means or methods which will ensure safety and minimize dust, noise, and other nuisance.

E. Any part of building, whether structural, or accessory, which has become unstable through removal of other parts, shall be removed as soon as practical and no such unstable part shall be left free-standing or inadequately braced against cause of collapse at end of day's work.

F. Structural steel in building:
   1. Provide temporary support or complete new work required for support prior to removal. Maintain existing parts until equipment supported by part is removed or modified.
   2. Remove and dispose of steel indicated on Drawings including miscellaneous associated steel. Do not remove bolts and/or rivets of common connections; cut member being removed to leave connection unless shown otherwise.
   3. Where steel penetrates masonry or concrete wall, cut flush with wall unless shown otherwise.
   4. Where applicable, remove anchor bolts and grout to top or face of existing concrete. Make provisions to ensure smooth surface where grout is removed.
   5. Care shall be taken not to damage any portion of existing structural steel that is to remain intact.

G. Foundations:
   1. Perform required excavation, dewatering, sheeting shoring and bracing required to perform demolition. Refer to Section 31 23 16-16.
   2. Removal shall be complete for concrete, bolts, reinforcing steel, and structural steel.
   3. Removal of foundations attaching to existing plant building, chimney foundation, or other construction to remain shall be to face of foundation or wall to remain.
   4. Upon completion of foundation removal, backfill excavating and depressions with compacted backfill as specified in Section 31 23 16-16. Grade area as specified in Section 31 22 00.
   5. Do not backfill excavations or voids left from foundation removals until removal adequacy is confirmed by Engineer.

H. At termination of concrete removal, prepare surfaces and cover with cement-water grout paste to present neat finished surface appearance.

I. Remove and dispose of portion of existing building walls to limits required by new construction and required for removal or placement of materials and equipment. Replace removed portions with same type construction.

J. Material shall be removed completely from areas which are to remain. Contractor shall make special inspections by its job superintendent and quality control personnel to assure that material is not left in areas where they can get into operating systems.

K. Provide temporary, insulated, weathertight closure over openings above grade in buildings to remain.
   1. Closures shall remain in place at all times except as directed by Engineer and as required for demolition and construction operations.
   2. Closure shall be constructed to prevent water and material from entering building opening. Construct closure to protect interior of building from weather.
   3. Closure shall be adequate in strength and anchorage to withstand uplift and wind loading in accordance with ANSI A58.1.
   4. Repair and maintain closure until Work is accepted as complete. Damage by other contractors will be repaired at their expense.
   5. Closure not replaced by permanent construction under this contract will be removed later by Owner under separate contract.

3.08 DEMOLITION OF MECHANICAL ITEMS

A. Remove mechanical equipment and materials as shown on Drawings and as specified.

B. Removal shall include but not limited to piping, valves, equipment, hangers, and associated accessories.

3.09 DEMOLITION OF ELECTRICAL ITEMS

A. Examination:
   1. Verify that abandoned wiring and equipment serve only abandoned facilities.
   2. Demolition drawings are based on cursory field observation and existing record documents. Report discrepancies to Owner before disturbing existing installation.

B. Preparation:
   1. Before beginning underground demolition, contact Owner, and local utilities locating service One Call at least 24 hours before digging.
   2. Contact Owner to determine equipment items are to be salvaged and delivered to storage area. Other equipment shall become property of Contractor and shall be removed from job site.
   3. Disconnect electrical systems in or on walls, floors, and ceilings scheduled for removal.
   4. Coordinate utility service outages with utility company.
   5. Provide temporary wiring and connections to maintain existing systems in service during construction.

C. Demolition and extension of existing electrical work:
   1. Remove, relocate, and extend existing installations to remain to accommodate new construction.
   2. Remove abandoned wiring to source of supply.
   3. Remove exposed abandoned conduit, including abandoned conduit above accessible ceiling finishes. Cut conduit flush with walls and floors, and patch surfaces.
   4. Disconnect abandoned outlets and remove devices. Remove abandoned outlets if conduit servicing them is abandoned and removed. Provide blank cover for abandoned outlets which are not removed.
   5. Disconnect and remove the following:
      a. Abandoned panelboards and distribution equipment.
      b. Devices and equipment serving utilization equipment that has been removed.
      c. Abandoned light fixtures, including brackets, stems, hangers, and other accessories.
   6. Repair adjacent construction and finishes damaged during demolition and extension work.
   7. Maintain safe access to existing electrical installations which remain active.

D. Disposal of equipment containing polychlorinated biphenyl compounds (PCBs): Transformers, capacitors, and lamp ballasts containing PCBs shall be disposed of in accordance with CFR 40 Part 761. Ballasts, even those labeled "no PCBs", shall be disposed of accordingly. Deliver equipment to an Environmental Protection Agency (EPA) approved incinerator or ballast recycling service for disposal. Provide Owner with manifest and certificate of destruction pursuant to CFR 40 Part 761, Subpart K.

3.10 HANDLING OF DEMOLISHED MATERIALS

A. Salvageable materials, except items specified to remain property of Owner, shall become property of Contractor and shall be removed from Site as Work progresses.

B. Certain equipment and material shall be removed and reinstalled as indicated on Drawings and specified herein. Contractor shall remove such items, store if required, and reinstall as indicated. In the event of loss or damage to such material or equipment, Contractor shall replace items without additional cost to Owner.

C. Transport demolished materials off Owner’s property and legally reuse, salvage, recycle, or dispose of materials.

D. Storage of materials to be removed not permitted to accumulate on site. Promptly remove and dispose of unsalvageable equipment and materials.

E. Debris shall not be allowed to accumulate on roofs, floors, or in areas outside of and around any buildings being removed. Waste materials and debris resulting from Work shall be removed and disposed of daily by Contractor in disposal area obtained by Contractor.

F. Burning of waste lumber and other building materials or trash on Site will not be permitted.

G. No material, obstructions, or debris shall be placed or allowed to accumulate within 15' of any fire hydrant. Fire hydrants shall be accessible at all times.

3.11 PATCHING

A. Patch openings in walls, foundations, and checker plating caused by demolition. Use materials comparable to adjacent undisturbed surfaces for patching.

B. Any new construction work that affects existing building structures shall be patched to match existing surrounding materials. This includes roofing, walls, walks, flooring ceilings, and any other materials that affect structural or architectural integrity of building.

3.12 REPAIR AND RESTORATION

A. Contractor shall be responsible for damage to personnel, public, roadways, streets, structures, utilities, facilities, and equipment caused by operations and shall repair any damage at its own expense or replace items damaged beyond repair.

B. Do not operate vehicles or equipment on existing construction or roadways that could be damaged.

C. Backfill applicable excavated areas, open pits, and other depressions as work progresses. Backfill materials shall conform to requirements of Drawings and other specification sections.

D. Grade areas disturbed by construction to smooth, uniform surfaces sloped to drain.

E. Replace construction removed to facilitate operations with construction of equal quality to that removed.

3.13 CLEAN-UP

A. Maintain public streets, alleys, or other thoroughfares used in carrying out disposal free of litter or soil attributable to this operation. Equip and load trucks or other vehicles to prevent leakage, blowing off, or other escape of any portion of whatsoever is being hauled. Cost incurred by Owner in cleaning up such litter will be charged to Contractor and deducted from monies due or to become due it under this contract.

B. Upon completion of demolition work in each area, thoroughly clean area of materials not to remain.

C. Remove materials (except paint) adhered to construction to remain.

D. Leave areas in broom clean and vacuumed condition.

END OF SECTION

1) J. M. Brady
2)

PART 1 GENERAL

1.01 SECTION INCLUDES

A. Cast-in-place concrete including formwork, reinforcing steel and miscellaneous materials.

1.02 INFORMATIONAL SUBMITTALS

A. Product data. Unless otherwise indicated, submit for each type of product provided under work of this Section:

B. Quality assurance data:
   1. Tests, or certificates of compliance with standards specified in this Section at least 14 days prior to commencing concrete placement for:
      a. Cement: From each car from which cement will be used.
      b. Fly ash: From each separate shipment from which fly ash is being used.
      c. Aggregates: For each size aggregate from each source of aggregate, for grading, deleterious substances and soundness.
   2. List of admixtures, joint fillers, sealants, curing compounds, and other manufactured materials proposed identifying manufacturer and type. Provide data on specific items when requested by Owner or Special Inspector.
   3. Testing laboratory reports required at least 14 days prior to commencing concrete placement for each class of concrete and each size aggregate:
      a. Proposed concrete design mix.
      b. Tests on concrete cylinders from trial batch of proposed mix.
   4. Testing laboratory reports for tests on concrete cylinders taken in field.

C. Submit to Special Inspector Engineer unless noted otherwise.

1.03 ACTION SUBMITTALS

A. Shop Drawings on reinforcing steel. Submit to Owner unless noted otherwise.

1.04 QUALITY ASSURANCE

A. Contractor shall retain services of qualified independent testing laboratory to perform the following tests:
   1. Obtaining, making samples and trial batches and performing laboratory testing specified.
   2. Establish proposed concrete design mix proportions on basis of either field experience and/or trial mixtures in accordance with ACI 318, Chapter 5, except specific requirements shall conform to requirement of these specifications. Determine and submit supporting data, standard deviation, trial batch tests, required average strength, proportions, air content, and slump range for each mix.
   3. Provide reports to Owner giving information on materials, concrete design mixes and testing performed.

B. Perform Work in accordance with ACI 117 and 301.

C. Owner shall retain services of qualified independent testing laboratory to perform the following tests:
   1. Obtaining, making samples and performing laboratory and field testing specified.
   2. Provide reports to Special Inspector and Owner giving information on materials and testing performed.
   3. Reports shall indicate whether or not materials meet specifications.
   4. Concrete strength tests:
      a. Comply with ASTM C39/C39M for testing and ASTM C31/C31M or C192/C192M for preparation of cylinders.
      b. Field tests: Sample in accordance with ASTM C172; make and test 3 cylinders from each sample on basis of not less than:

1) One sample from each day's placement for each class of concrete.
2) One sample from each 150 cu yd (120 cu m).
3) One sample for each 5,000 sq ft (460 sq m) of surface area for slabs or walls.
4) For a given class of concrete, if frequency of testing specified above would provide less than 3 samples, sample at least 3 randomly selected batches or each batch if 3 batches or fewer are required.

c. Cylinders shall be laboratory cured. Test one laboratory cured cylinder at 7 days and other two at 28 days for average strength.
d. If tests indicate deficient strength as defined by ACI 318, Contractor shall immediately adjust mix to increase average of subsequent test results and, when directed, perform drilled core testing, ASTM C42/C42M. Testing and remedial work shall be at no additional cost to Owner.

5. Slump tests:
   a. Sample on basis specified above for field strength tests; comply with ASTM C172 and C143/C143M.
   b. If slump exceeds Specifications, promptly remove batch from Work and dispose of off-site at location selected by Contractor. Do not add water in excess of specified water-cement ratio to batch to achieve desired slump.
6. Air content tests:
   a. Sample on basis specified above for field strength tests.
   b. Obtain samples from concrete at point of discharge from chute or pumper hose.
   c. Determine air content by pressure method; comply with ASTM C231.
   d. If air content does not meet Specifications, remove deficient concrete from Work.
7. Temperature tests:
   a. Sample on basis specified above for field strength tests.
   b. Comply with ASTM C1064/C1064M.
   c. If temperature does not meet Specifications, remove deficient concrete from Work.

1.05 DELIVERY, STORAGE, AND HANDLING

A. Cement: Keep clean, dry, and free from weather damage.

B. Aggregates: Stockpile each gradation separately on clean, noncontaminating surface.

PART 2 PRODUCTS

2.01 CEMENT

A. Portland cement: ASTM C150, Type I or II.

B. High-early-strength portland cement: ASTM C150, Type III. May be used instead of Type I or II cement at Contractor's option, unless specified otherwise, to achieve 28-day strength at 7 days.

C. Use only 1 brand of each type of cement.

D. Slag cement: Comply with ASTM C989; Grade 100 or 120.

2.02 AGGREGATE

A. Regular aggregate: Strong, durable, well-graded minerals conforming to ASTM C33 requirements for grading, deleterious substances and soundness.

B. Aggregates not conforming exactly to above specifications may be used provided:
   1. Special tests or actual service establish that such aggregates will produce concrete of quality specified.
   2. An Addendum to Specifications is issued prior to receipt of Bids; no deviations will be permitted after receipt of Bids.

C. Coarse aggregate nominal size:
   1. 1-1/2" to No. 4 (38 mm to 4.75 mm): Use for all concrete unless specified otherwise.

2. 3/4" to No. 4 (19 mm to 4.75 mm): Use for slabs and thin sections and areas where clear spacing between reinforcing bars is less than 3" (75 mm).

2.03 FLY ASH

A. Comply with ASTM C618; Class F or C. Report chemical analysis of fly ash in accordance with ASTM C311. Evaluate and classify fly ash in accordance with ASTM D5759.

B. Fly ash for total Project shall be obtained from single source.

C. Design concrete mixes to include fly ash in amount of approximately 15% to 20% of cement by weight.

D. May be used at Contractor's option for all concrete, except not permitted for high early strength concrete.

2.04 WATER

A. Clean, fresh, free from injurious amounts of oil, alkali, acid, salts, organic materials, or other substances that may be deleterious to concrete or steel. Mix water shall comply with ASTM C1602.

2.05 ADMIXTURES

A. Water-reducing and set-controlling admixture, ASTM C494/C494M, type as required. Use for all concrete.

B. Air entraining agent, ASTM C260. Use in accordance with manufacturer's recommendations. Use for foundations and exterior concrete. Do not use for interior slabs.

2.06 REINFORCING

A. Bars:
1. ASTM A615/A615M, Grade 60 (420) deformed bars.
2. Bend bars cold to conform to required details.

2.07 VAPOR BARRIER

A. Polyethylene film, clear: In accordance with ASTM E1745.

B. Minimum 10 mil (0.25 mm) thickness.

C. Use where shown.

2.08 FORMWORK

A. Forms:
1. Douglas fir, exterior type, concrete form plywood, 5/8" (15 mm) thick minimum, conforming to DOC PS 1, Grade B-B, Class I or II.
2. Removable metal forms with surfaces equal to Douglas fir, exterior type, concrete form plywood.
3. Fiber tube forms: Cylindrical fiber reinforced forms.

B. Form ties: Type leaving no metal within 1" (25 mm) of finished surface after removal of forms.

C. Form coating:
1. Wood forms: Nonstaining mineral oil or commercially produced form-release agent that will not bond with, stain, or adversely affect concrete surfaces and curing, and will not impair bond or adhesion of subsequent treatment of concrete surfaces, "Nox-Crete Form Coating," by Nox-Crete Chemicals, or equal.
2. Metal forms: Treat surfaces as recommended by manufacturer before placing reinforcing.

3. Fiber tube forms: Treat surfaces as specified for wood forms or as recommended by manufacturer.

2.09 JOINT MATERIALS

A. Expansion and isolation joint filler: Preformed nonextruding and resilient nonbituminous type, ASTM D1752, Type 1; use where shown.

B. Expansion and isolation joint sealant:
1. Horizontal joints: "Sonolastic SL2," multi-component polyurethane base by BASF Construction Chemicals, or equal.
2. Vertical joints: “Sonolastic NP-2,” multi-component polyurethane base by BASF Construction Chemicals, or equal.
3. Provide primer as recommended by manufacturer.

C. Sawed control joint sealant:
1. "Masterfill 300," 2-part flexible 100% solids epoxy joint filler, by BASF Construction Chemicals, or equal.
2. Use for sawed control joints.

2.10 BENTONITE WATERSEALS

A. Size: 1" x 3/4" (25 mm x 19 mm).

B. Use: Where specifically shown.

C. Manufacturer: American Colloid Company "Waterstop-RX Cold Joint Water Stop Volclay Waterproofing Systems," or equal.

2.11 CURING MATERIALS

A. Liquid membrane-forming compound:
1. ASTM C309, Type 1 with fugitive dye, except Type 2 with white pigment for surfaces exposed to direct rays of sun.
2. Do not use compounds containing wax, oil, resin, varnish, or other bases that will prevent bonding of finishes such as floor coverings, tile, additional concrete, paint, and similar applied finishes.
3. Use for curing at Contractor's option except where other products are specified for a particular application.

B. Plastic film:
1. Polyethylene plastic film, white, nonstaining, conforming to ASTM D2103.
2. Minimum 4-mil (0.1 mm) thickness.
3. Use for curing at Contractor's option except where other products are specified for particular application.

C. Absorptive mat:
1. Cotton fabric, burlap fabric, or burlap-polyethylene material woven or bonded to prevent separation.
2. Material shall be clean and nondetrimental to concrete or finish.
3. Use for curing at Contractor's option except where other products are specified for a particular application.

2.12 SURFACE FINISH MATERIALS

A. Curing and sealing compound:
1. Initial curing and sealing application: "Vocomp-20" by W. R. Meadows, Inc., or equal.
2. Intermediate and final sealing application: "Vocomp-25" by W. R. Meadows, Inc., or equal.
3. Final application immediately before turning slab area over to Owner: "Vocomp-25" by W. R. Meadows, Inc., or equal.

4. Use: where shown.

2.13 GROUT

A. Regular grout:
1. One part portland cement to 3 parts fine aggregate with sufficient water to maintain adequate workability. Substitute white cement for normal portland cement to match color of adjacent concrete.
2. Minimum strength: 4,500 psi (31 Mpa) at 28 days.
3. Use for patching.

B. Nonshrink grout:
1. Nonmetallic and free of chloride, gypsum or corrosive-type materials; ASTM C1107, Grade C; formulation suitable for application.
2. Minimum strength: 5,000 psi (34.5 Mpa) at 28 days.
3. Use for grouting beneath baseplates, bearing plates, equipment bases, and where shown.

2.14 CONCRETE DESIGN AND USE

A. Each concrete design mix shall be established in strict accordance with ACI 318 by proportioning on basis of either experience and/or trial mixtures.

B. Strength classifications:

Class	Specified Compressive Strength, f'c	Required Average Compressive Strength, f'cr
A	4,500 psi	5,700 psi

Class	Specified Compressive Strength, f'c	Required Average Compressive Strength, f'cr
A	31 MPa	39.3 MPa

C. Required average compressive strengths: Produce concrete of average strengths noted above unless test results substantiate a lower permissible average strength based on standard deviation criteria set forth in ACI 318. Strengths listed above are 7-day strengths for concrete using high-early-strength cement and 28-day strengths for concrete using other type cements.

D. Maximum water-cement ratio: 0.45 by weight. Where pozzolan fly ash is used, water-cement plus pozzolan ratio shall not exceed specified ratio.

E. Air entrainment: Concrete is assigned to Exposure Category F2 in accordance with ACI 318 and shall contain entrained air within following limits.

Nominal Maximum Aggregate Size, in.	Total Air Content, Percent By Volume
	Exposure Classes F2 and F3
3/8	7.5
1/2	7
3/4	6
1	6
1-1/2	5.5
2	5
3	4.5

Nominal Maximum Aggregate Size, mm	Total Air Content, Percent By Volume
	Exposure Classes F2 and F3
9.5	7.5
13	7

19	6
25	6
38	5.5
51	5
76	4.5

F. Workability:
1. Proportions of concrete shall produce a mixture, suited to placement methods, which will work readily into corners and angles of forms and around reinforcement and embedded items. Segregation of materials or presence of free water will not be permitted.
2. Slump of concrete: Use minimum practical; vary within limits given to suit placement conditions; in no case is slump to be increased by addition of water in excess of design mix quantity:

Type of Construction	Slump, in.	
	Minimum	Maximum
All concrete unless noted otherwise	2	5

Type of Construction	Slump, mm.	
	Minimum	Maximum
All concrete unless noted otherwise	50	125

G. Class A concrete: Use for all concrete unless specified otherwise.

H. Water-soluble chloride ion content, maximum: Concrete is assigned to exposure Category C1, and shall comply with requirements of Chapter 19 of ACI 318-2014.

2.15 READY-MIX CONCRETE

A. Provide concrete from an established, approved ready-mix plant. Ready-mix plant equipment and facilities shall be certified in accordance with NRMCA QC-3.

B. Equipment and methods: Conform to ASTM C94/C94M.

2.16 FINISHED CONCRETE

A. Blended hydraulic cement mix design: Comply with ASTM C595.

B. Provide following:
1. Fly ash: Provide replacement rate of 15% of total cementitious materials.
2. Slag cement: Provide replacement rate of 25% of total cementitious materials.

PART 3 EXECUTION

3.01 PREPARATION

A. Construct forms strong, straight, adequately braced and securely fastened.

B. Install vapor barrier where shown.

C. Remove laitance from previously placed or existing concrete; thoroughly clean surface before placing additional concrete.

D. Apply form coating on formwork in accordance with manufacturer's instructions. Apply prior to placing reinforcing steel, anchoring devices, and embedded items.

E. Do not apply form coating where concrete surfaces are scheduled to receive special finishes which may be affected by agent.

3.02 PLACING CONCRETE

A. Clean transporting equipment, reinforcing, and embedded items before placing concrete. Remove water and debris from places to be occupied by concrete.

B. Place no concrete until forms, reinforcing, and embedded items have been verified as adequately supported and accurately placed. Place no concrete over water-covered, muddy, or frozen soil.

C. Immediately remove concrete where water, soils, or other deleterious substances are permitted to mix with concrete, form or embedded item movement occurs, or inadequate consolidation is obtained.

D. Hot weather concreting:
1. Applies to concrete placed when ambient temperature exceeds 90°F (32°C).
2. Conform to ACI 305R recommendations and requirements.

E. Cold weather concreting:
1. Applies to concrete placed when ambient temperature is below 40°F (4°C).
2. Conform to ACI 306R recommendations and requirements.
3. If temporary heating facilities used are of type which produce an atmospheric condition of high carbon dioxide content, seal off concrete in such manner that no damage will result to concrete surface.

F. Employ best industry practices to prevent segregation during placing. Do not drop concrete more than 5' (1500 mm). Use tremied or pumped concrete to provide proper placement. Place in layers approximately 18" (450 mm) deep.

G. Place concrete continuously in each section until completed. Permit not more than 30 minutes between depositing adjacent layers of concrete within each section, unless an acceptable set retarder is used in concrete mix.

H. Thoroughly compact, puddle, and vibrate concrete into corners and around reinforcing and embedded items. Use internal vibration where size of section permits.

I. Maintain concrete placing temperature between 50°F (11°C) and 90°F (32°C) except as specified for hot and cold weather concreting.

J. Place sections of concrete in sequence that eliminates shrinkage effects to greatest extent practicable.

K. Protect concrete from injury due to sun, cold weather, running water, construction operations, and other causes until properly cured.

3.03 REINFORCEMENT PLACEMENT

A. Remove scale, loose flaky rust, dirt, grease, curing compound, and other coatings that would impair bond.

B. Install slab-reinforcing bars in correct position by use of preformed bolsters and spacers, except concrete blocks may be used to position bars in concrete placed on grade. Concrete block shall have compressive strength equal to that of surrounding concrete.

C. Space bars properly and tie securely in position before placing concrete. Tack welding to keep reinforcing in place is not permitted.

3.04 CONSTRUCTION JOINTS

A. Install only where shown or where specifically permitted.

B. Provide keyway 1-1/2" (38 mm) deep covering approximately 1/3 area of construction joint, unless shown otherwise.

C. Install bentonite waterseal where shown or specified.

D. Location where not shown:
   1. Contractor shall locate joints using the following guide for Owner's Representative's review.
   2. Near center of self-supported slabs, beams, and girders unless beam intersects girder at this point, in which case joints in girders shall be offset a distance equal to twice beam width.
   3. Underside of deepest beam at walls and piers.
   4. At other places least likely to impair strength and appearance.
   5. Provide additional shear reinforcement where requested by Owner's Representative.
   6. Maximum pour unit shall be less than 50' (15 m) in any dimension unless specified otherwise.

E. A delay, until concrete is no longer plastic, shall occur after placing concrete for columns or walls before placing concrete for slabs, beams, or girders supported thereon.

F. Slabs-on-grade: Place concrete in continuous side-by-side strips. Saw-cut control joints as soon as possible after concrete hardens. Allow initial shrinkage of concrete to take place (ideally 90-120 days) before applying sealant.

3.05 EXPANSION AND ISOLATION JOINTS

A. Formed joints: Make exposed edge of concrete slightly rounded with edger at joints to contain joint sealant.

B. Install materials in accordance with manufacturers' instructions. Set preformed material securely in place before placing concrete.

C. Install joint filler to within joint width (1/2" (12 mm) minimum) of exposed surface. Fill remainder of joint with joint sealant.

3.06 EMBEDDED ITEMS

A. Install items required under this contract to be embedded in concrete. Install items required by others for embedding in concrete, if so instructed before placing concrete.

B. Fasten embedded items securely in proper position before placing concrete.

C. Conduit or pipe embedded in slabs or walls:
   1. Locate in center of slab or wall and space not closer than 3 diameters on center; locate to avoid impairing strength of concrete.
   2. Coordinate placing of reinforcing with conduit or pipe location. Do not cut reinforcing to clear conduit or pipe.

D. Aluminum pipe shall not be embedded in concrete. Where aluminum projects into or rests against surface of concrete, coat surfaces of aluminum to prevent direct contact with concrete.

3.07 GROUTING

A. Roughen concrete surfaces by light chipping to remove laitance to approximately 1/2" (12 mm). Do not expose reinforcing steel.

B. Remove materials which might interfere with bond; prepare surfaces in strict conformance to manufacturer's instructions.

C. Mix, place, and cure grout in strict accordance to manufacturer's instructions.

D. Remove shims after grout is placed. Fill shim voids with grout.

3.08 FINISHING

A. Flatwork:
   1. Tamp concrete to force coarse aggregate down from surface.
   2. Screed with straightedge, eliminate high and low places, bring surface to required finish elevations; slope uniformly to drains.
   3. Dusting of surface with dry cement or sand during finishing operations is not permitted.
   4. Apply curing compounds and similar materials in accordance with manufacturer's instructions during or after finishing.
   5. Trowel finish:
      a. Float surface to true, even plane.
      b. Steel trowel to smooth, uniform finish, free of defects; steel trowel second time to final burnish finish; use edger on exposed edges.
      c. Use on interior floor slabs.
   6. Float finish:
      a. Float surface to true, even plane.
      b. Float second time to uniform finish with wood or cork float; use edger on exposed edges.
      c. Use on equipment foundations and tops of structure foundations.
   7. Roughened finish:
      a. Roughen surface with rake or stiff broom to minimum depth of 1/4" (6 mm).
      b. Use on surfaces to receive additional concrete or grout.
   8. Broomed or belted finish:
      a. Float surface to true, even plane.
      b. Steel trowel to smooth, uniform surface.
      c. Broom with fiber brush or drag burlap belt across surface in direction transverse to traffic flow.
      d. Use on sidewalks and exterior slabs at door entrances.

B. Formed surfaces:
   1. Remove fins, projections, and loose material.
   2. Clean surfaces of form oil.
   3. Patch honeycomb, aggregate pockets, voids, and holes as follows:
      a. Chip out until sound concrete is exposed to minimum depth of 1" (25 mm).
      b. Prepare patching mortar with approximately 2 parts normal portland cement, one part white cement, 9 parts fine aggregate; vary proportions of cement as necessary to match color of adjacent concrete.
      c. Saturate surfaces with water and fill cavities with patching mortar.
   4. Fill holes left by form ties with patching mortar.
   5. Cure patches as specified for concrete.

3.09 FORM REMOVAL

A. Minimum time before removal after placing concrete, unless permitted otherwise:
   1. Footings: 24 hours.
   2. Walls, piers, and columns: 48 hours (24 hours for metal-lined forms).
   3. Self-supported beams and slabs: 14 days.
   4. Time specified above represents cumulative time during which temperature of concrete is maintained above 50°F (11°C) and for concrete without set-controlling admixtures.

B. Reduce removal time by half for high-early-strength cement concrete.

C. In any event, do not remove supporting forms and shoring until concrete has acquired sufficient strength to safely support own weight plus construction loads.

D. Take care when removing forms that concrete is not marred or gouged and that corners are true, sharp and unbroken.

E. Reshoring and backshoring: Conform to requirements of Section 2, ACI 301.

3.10 CURING

A. Cure all concrete; begin curing as soon as possible after placement of concrete.

B. Use of liquid membrane-forming curing compound permitted for all concrete except where product would impair bond of other applied materials to surface, where surface curing and sealing product is specified for use, or where other method of curing is specified for particular use.

C. Plastic film curing:
1. Dampen surface of concrete and lay plastic film with minimum 6" (150 mm) side laps and free of wrinkles; tape side laps.
2. Hold film in place with lumber or use similar provisions to prevent exposure of concrete for 7 days after placing.
3. Immediately repair tears in film.

D. Water curing:
1. Keep concrete continuously wet for 7 days after placing.
2. Use on concrete surfaces not receiving compound or plastic film curing.
3. Clean, nonstaining absorptive mat may be used with water curing.
4. Do not use for curing cold weather concrete.

3.11 CURING AND SEALING COMPOUND

A. Initial curing and sealing application shall be applied immediately after concrete has sufficiently set to allow application without damaging surface.

B. Second application shall be applied 28 days after slab is cast.

C. Final application shall be applied immediately before turning the slab area over to Owner.

3.12 WASTE MANAGEMENT

A. Formwork: Reuse forms to greatest extent possible without damaging structural integrity of concrete and without damaging aesthetics of exposed concrete.

B. Mixing equipment: Return excess concrete to supplier; minimize water used to wash equipment.

C. Moisture curing: Prevent water run-off.

END OF SECTION

1) A. L. Bickford
2) W. T. Turechek

PART 1 GENERAL

1.01 SECTION INCLUDES

A. Other steel, iron, and metal items.

B. Miscellaneous metal.

C. Welding materials.

D. Anchor rods for installation of other steel, iron and metal items.

E. Adhesive anchors.

F. Mechanical anchors.

G. Masonry anchors.

H. Shop painting.

1.02 INFORMATIONAL SUBMITTALS

A. Product Data: List of manufactured materials proposed, identifying manufacturer and type.

B. Test Reports: ICC-ES evaluation reports for post-installed adhesive anchors, mechanical anchors, masonry anchors provided to verify conformance to specifications.

1.03 ACTION SUBMITTALS

A. Shop Drawings for other steel, iron or metal items as defined in AISC Code of Standard Practice.
   1. Indicate profiles, sizes, connection attachments, reinforcing, anchorage, size and type of fasteners, and accessories. Include erection drawings, elevations, and details where applicable.
   2. Indicate welded connections using standard AWS A2.0 welding symbols.
   3. Indicate net weld lengths.

1.04 QUALITY ASSURANCE

A. Perform welding in accordance with AWS D1.1 "Structural Welding Code".

B. Perform fabrication in accordance with AISC 303-10 “Code of Standard Practice for Steel Buildings and Bridges”.

C. Perform erection in accordance with AISC 303-10 “Code of Standard Practice for Steel Buildings and Bridges”.

1.05 DELIVERY, STORAGE, AND HANDLING

A. Adhere to product storage and handling requirements.

B. Accept metal fabrications on site in labeled shipments. Inspect for damage.

C. Protect metal fabrications from damage by exposure to weather.

PART 2 PRODUCTS

2.01 MATERIALS

A. Steel plates and shapes:
1. Structural W-shapes: ASTM A992/A992M Grade 50.
2. Structural M-shapes: ASTM A36/A36M.
3. Structural S-shapes: ASTM A36/A36M.
4. Structural T-shapes: Cut from structural W-shapes, M-shapes, or S-shapes.
5. Structural HP-shapes: ASTM A572/A572M Grade 50.
6. Channels and angles: ASTM A36/A36M.
7. Round hollow structural sections: ASTM A500/A500M, Grade B.
8. Rectangular hollow structural sections: ASTM A500/A500M, Grade B.
9. Structural pipe: ASTM A53/A53M, Grade B.
10. Structural plates and bars: ASTM A36/A36M.

B. Galvanizing: ASTM A123/A123M.

C. Standard bolts: ASTM A307.

D. Threaded rods: ASTM A36

E. Nuts:
1. ASTM A563 (ASTM A563M) Heavy hex type.
2. Finish: Hot-dipped galvanized.

F. Washers:
1. ASTM F436 (ASTM F436M); Type 1, Furnish clipped or beveled washers where required.
2. Finish: Hot dipped galvanized.

2.02 WELDING MATERIALS

A. Steel: AWS D1.1; type as required for materials being welded.

2.03 ANCHOR RODS

A. Provide anchor rod assemblies for:
1. Other steel, iron, and metal items furnished under this Section.
2. Equipment and structures furnished by others, where detailed on Drawings.

B. Anchor rods:
1. Type: ASTM F1554; Grade 36.
2. Shape: Straight.
3. Plate washers: ASTM A36/A36M.
4. Provide washers and heavy hexagon heads and nuts on anchor bolts unless specified otherwise.
5. Provide double nuts for anchor bolts used for installation of machines and other equipment subject to vibration.
6. Galvanize anchor bolts, nuts and washers.

C. Threaded rods:
1. Type: ASTM A36/A36M.
2. Finish: Hot-dipped galvanized.

2.04 ADHESIVE ANCHORS

A. Threaded rods anchored in concrete with 2-component blend of resin and hardener. Filler material may be mixed with resin and hardener in accordance with manufacturer's directions.

B. Anchor rod system shall have ICC approval for use in cracked concrete and for seismic conditions and shall have passed mandatory creep tests requirements of AC 308.

C. Threaded rod type:
   1. All-threaded.
   2. Standard: ASTM A36/A36M, galvanized. Use unless indicated otherwise on Drawings.
   3. High-strength: ASTM A193/A193M, Grade B7, galvanized.
   4. Stainless steel: ASTM F593 (AISI 304).

D. Manufacturer: "HIT-RE 500-SD System" by Hilti; “SET-XP” by Simpson Strong Tie, or equal.

2.05 MECHANICAL ANCHORS

A. Torque controlled wedge-type with expanding cone.

B. Size and locations: As shown or required for equipment installation.

C. Ductile, Category 1, approved for use in seismic applications, cracked and uncracked concrete, and shall have ICC approval in accordance with AC 193.

D. Type:
   1. As indicated on Drawings:
   2. Expansion anchor:
      a. Standard (use unless indicated otherwise on Drawings): Carbon steel with electroplated zinc.
      b. Stainless steel.
      c. Manufacturer: “Kwik-Bolt TZ” by Hilti, “Strong-Bolt 2” by Simpson Strong-Tie, or equal.

2.06 MASONRY ANCHORS

A. Masonry anchor rods:
   1. All-threaded.
   2. Standard (use unless indicated otherwise on Drawings): ASTM F1554, Grade 36, galvanized.
   3. Stainless steel: Threaded ASTM F593 (AISI 304)
   4. Provide washers and heavy hexagon heads and nuts on anchor bolts unless specified otherwise.

B. Solid-core masonry anchors (anchored in grout-filled or solid masonry):
   1. Use unless masonry anchors are noted on Drawings as "Adhesive Hollow Masonry Anchors."
   2. Type:
      a. Adhesive anchor: "HIT-HY-70 Adhesive System" by Hilti, or equal.
         1) Standard (use unless indicated otherwise on Drawings): ASTM A36/A36M, galvanized.
         2) Stainless steel: ASTM F593 (AISI 304).
      b. Mechanical expansion anchor: “Kwik Bolt 3” by Hilti, or equal.
         1) Standard (use unless indicated otherwise on Drawings): Hot-dip galvanized steel.
         2) Stainless steel.
   3. Fill hollow core masonry cells with grout where anchors will be installed.

C. Adhesive hollow masonry anchors:
   1. Manufacturer: "HIT-HY-70 Adhesive System" by Hilti with screen; or equal.
      a. Standard rod (use unless indicated otherwise on Drawings): ASTM A36/A36M, galvanized.
      b. Stainless steel rod: Threaded ASTM F593 (AISI 304)
   2. Use for nonstructural anchoring of light weight equipment or where specifically identified for use on Drawings. Resulting anchor loads shall be less than manufacturer's allowable loads.

2.07 FACTORY FINISHING

A. Surface preparation: Remove oil, grease, dirt, rust, loose mill scale, and other foreign elements by "Power Tool Cleaning" in accordance with SSPC-SP3.

B. Shop primer:
   1. Apply one shop coat of Tnemec Co., Inc., “10 Rust Inhibitive Primer,” or equal.
   2. Apply in accordance with manufacturer's directions including recommended coverage.
   3. Coordinate color with Owner for steel not receiving finish coatings.

C. Omit shop prime coat from surfaces subject to field welding or to be embedded in concrete.

D. Omit shop prime coat from galvanized surfaces.

E. Leave unpainted steel clean and free from rust.

PART 3 EXECUTION

3.01 ERECTION

A. Anchor miscellaneous items securely to structural steel framing, concrete or masonry.

B. Install items plumb and level, accurately fitted, free from distortion or defects.

C. Make provisions for erection stresses. Install temporary bracing to maintain alignment, until permanent bracing and attachments are installed.

D. Field weld components where indicated on Drawings.

E. Perform field welding and inspect welds in accordance with AWS D1.1.

3.02 PREPARATION

A. Clean and strip primed steel items to bare metal where site welding is required.

B. Supply setting templates for metal items required to be cast into concrete or embedded in masonry.

3.03 ANCHOR RODS

A. Install embedded anchor rods as shown on Drawings.

B. Coat threaded portion of anchor rods with oil or grease and wrap with protective tape at time bolts are positioned for new construction. Tape shall remain in place until rods are secured.

3.04 ADHESIVE ANCHORS AND ADHESIVE MASONRY ANCHORS

A. Install in strict accordance with manufacturer's written instructions.

B. Perform work using manufacturer's standard equipment including adhesive cartridges, dispensing guns, mixer tubes and extensions, brush, and air nozzle for compressed air cleaning of holes. Contractor shall possess equipment at site prior to start of installation and workers shall demonstrate knowledge of procedure for installing anchors prior to installation.

C. Use hammer drill except where holes are within 6" (150 mm) of edge of concrete or masonry, core drill holes.

D. Inspect existing concrete and masonry at anchor locations for soundness. Report to Engineer cracked, deteriorated or weak concrete or masonry detected from drilling operation or from inspection.

3.05 MECHANICAL ANCHORS AND MECHANICAL MASONRY ANCHORS

A. Install in strict accordance with manufacturer’s written instructions.

B. Use manufacturer's installation equipment.

3.06 FIELD PAINTING

A. Apply one field coat of primer to cleaned surfaces of bolts, new welds and abrasions to shop coat after erection.

B. Do not paint galvanized steel work.

C. After erection, repair hot-dip galvanized coatings in accordance with ASTM A780. This includes surfaces where shop-applied galvanized coatings have been damaged, removed, or omitted.

END OF SECTION

1) A. L. Bickford
2) W. T. Turechek

PART 1 GENERAL

1.01 SECTION INCLUDES

A. Rolling service doors.

1.02 ACTION SUBMITTALS

A. Shop Drawings indicating pertinent dimensioning, general construction, component connections and details, anchorage methods, hardware location, and installation details.

1.03 CLOSETOUT SUBMITTALS

A. Operation and maintenance data for shaft and gearing, lubrication frequency, control adjustments, and spare part sources.

PART 2 PRODUCTS

2.01 MANUFACTURERS

A. Cookson Co.

B. Cornell Iron Works, Inc.

C. North American Rolling Door.

D. Overhead Door Corp.

E. Raynor Garage Doors.

F. Materials referenced in this Section are manufactured by Cookson, unless noted otherwise.

2.02 ROLLING SERVICE DOORS

A. Series ESD20 “Thermiser” insulated rolling door, with bottom weatherseal, exterior guide, and internal hood seals for exterior use:
   1. Curtain slat: Galvanized steel/galvanized steel (no paint finish). Manufacturer-recommended gage based on performance requirements. Minimum 24/24 gage, Grade 40, ASTM A653 galvanized steel zinc coating.
   2. Slat finish: SpectraShield® coating system. Colors selected by Owner from manufacturer's standard colors after award of Contract.
      a. ASTM A 653 galvanized base coating treated with dual process rinsing agents in preparation for chemical bonding, gray baked-on base coat and gray baked-on polyester finish coat.
      b. Zirconium treatment followed by baked-on polyester powder coat. Minimum 2.5 mils (0.065 mm) cured film thickness; ASTM D3363.
      c. Pencil hardness: H or better.
   3. Insulation: 7/8” (22 mm) foamed-in-place, closed cell urethane.
   4. Total slat thickness: 15/16” (24 mm).
   5. Operation: Chain-hoist.
   6. Size and location: See Door Schedule on Drawings.

B. Components:
   1. Endlocks:
      a. Fabricate interlocking sections with high strength nylon endlocks on alternate slats each secured with two 1/4" (6 mm) rivets.
      b. Provide windlocks as required to meet specified wind load.

2. Insulated bottom bar:
   a. Reinforced extruded aluminum interior face with full depth insulation and exterior skin slat to match curtain material and gage.
   b. Minimum 4” (75 mm) tall x 1-1/16” (30 mm) thickness.
   c. Finish to match slats.
3. Guides:
   a. Minimum 3/16” (4.76 mm) stainless steel angles.
   b. Provide windlock bars of same material when windlocks are required to meet specified wind load.
   c. Top of inner and outer guide angles to be flared outwards to form bell mouth for smooth entry of curtain into guides.
   d. Provide removable guide stoppers to prevent over travel of curtain and bottom bar.
   e. Finish: Type 304 stainless steel; No. 4 finish.
4. Brackets:
   a. Fabricate from minimum 3/16” (5 mm) steel plate with permanently lubricated ball or roller bearings at rotating support points to support counterbalance shaft assembly and form end closures.
   b. Finish: Corrosion Inhibitive. Zirconium treatment followed by corrosion inhibitive baked-on zinc-enriched gray polyester powder coat; minimum 2.5 mils (0.065 mm) cured film thickness.
5. Hood (exterior mount, sloped):
   a. Minimum 24 gage stainless steel with reinforced top and bottom edges.
   b. Provide minimum 1/4” (6 mm) steel intermediate support brackets as required to prevent excessive sag.
   c. Finish: Type 304 stainless steel; No. 4 finish.
6. Counterbalance:
   a. Barrel: Steel pipe capable of supporting curtain load with maximum deflection of 0.03” per foot (2.5 mm per meter) of width.
   b. Locks: Master-keyable cylinder operable from coil side of bottom bar, options for all types of operation. Standard mortise cylinder.
7. Weatherstripping: Bottom bar.
   a. Manually operated doors: Replaceable, bulb-style, compressible EDPM gasket extending into guides.
   b. Guides: Replaceable vinyl strip on guides sealing against fascia side of curtain.
   c. Hood: Neoprene/rayon baffle to impede air flow above coil.
   d. Lintel seal: Nylon brush seal fitted at door header to impede air flow.
8. Hood and operator covers:
   a. Metal cover shall protect coil or operator from exterior weather, debris or to meet OSHA or UL 325 safety requirements.
   b. Finish: Type 304 stainless steel; No. 4 finish.
9. Vision panels:
   a. 10” x 1-1/2” x 3/4" thick (250 x 38 x 19 mm) oval acrylic panes set with double-sided foam glazing tape and fully contained within slat assembly.
   b. Refer to drawings for number and placement.
   c. Smaller vision panels not acceptable.

2.03 OPERATION

A. Manual control guard chain hoist:
   1. Provide chain hoist operator with endless steel chain, chain pocket wheel and guard, geared reduction unit, and chain keeper secured to guide.
   2. Chain hoist shall include integral brake mechanism that will immediately stop upward or downward travel and maintain door in stationary position when hand chain is released.

PART 3 EXECUTION

3.01 INSPECTION

A. Verify that wall openings are ready to receive work and opening dimensions and tolerances are within limits.

B. Beginning of installation means acceptance of existing surfaces.

3.02 PREPARATION

A. Prepare opening to permit correct installation of door unit.

3.03 INSTALLATION

A. Install overhead coiling doors, in accordance with manufacturer's instructions.

B. Fit, align, and adjust door assemblies level and plumb; provide smooth operation.

3.04 ADJUSTING AND CLEANING

A. Adjust door assembly.

B. Clean doors and frames.

C. Remove labels and visible markings.

END OF SECTION

1) A. Baharani
2) C. M. Chamberlin

PART 1 GENERAL

1.01 SECTION INCLUDES

A. Aluminum frames, and storefront framing.

B. Anchors, brackets, and attachments.

1.02 RELATED REQUIREMENTS

A. Section 08 80 00 - Glazing.

1.03 INFORMATIONAL SUBMITTALS

A. Product data for each type of product specified.

B. Manufacturer's installation instructions.

1.04 ACTION SUBMITTALS

A. Shop Drawings indicating system and component dimensions, components within assembly, framed opening requirements and tolerances, anchorage and fasteners, infills, and affected related work.

B. Three samples, 4" x 4" (100 mm x 100 mm) in size, illustrating prefinished aluminum surface.

1.05 QUALITY ASSURANCE

A. Regulatory requirements: Hardware shall conform to Americans with Disabilities Act (ADA) requirements.

1.06 DELIVERY, STORAGE, AND HANDLING

A. Deliver materials to Site and store in dry, protected location to prevent damage.

B. Provide factory-applied strippable coating to protect prefinished aluminum surfaces.

1.07 WARRANTY

A. Provide 3year manufacturer's warranty. Warranty shall cover complete system for failure to meet specified requirements.

PART 2 PRODUCTS

2.01 PERFORMANCE REQUIREMENTS

A. System shall provide for expansion and contraction within system component caused by a cycling temperature range of 170°F (77°C) without causing detrimental effects to system or components.
   1. Maximum deflection of 1/175 of span.
   2. Allowable stress with safety factor of 1.65.
   3. System shall perform these criteria under wind load requirements for construction area.

B. Design and size members to withstand dead loads and live loads caused by pressure and suction of wind as calculated in accordance with IBC 2012 code. Limit mullion deflection to L/175, or flexure limit of glass with full recovery of glazing materials, whichever is less.

C. Drain water entering joints, condensation occurring in glazing channels, or migrating moisture occurring within system, to exterior.

D. Limit air infiltration through assembly to 0.06 cu ft/min/sq ft (0311/sec/m^2) of assembly surface area, measured at a reference differential pressure across assembly of 0.3" wg (75 Pa), as measured in accordance with ASTM E283.

E. Water leakage: None when measured in accordance with ASTM E331 with pressure difference of 8 psf (384 PA).

F. System shall accommodate, without damage to system or components, or deterioration of perimeter seal: Movement within system; movement between system and perimeter framing components; dynamic loading and release of loads; and deflection of structural support framing.

2.02 MATERIALS

A. Extruded aluminum: ASTM B221; 6063-T5 alloy and temper.

B. Sheet aluminum: ASTM B209.

C. Sheet steel: ASTM A446; galvanized.

D. Steel sections: ASTM A36; shapes to suit mullion sections.

E. Fasteners: Stainless steel.

2.03 FRAMING SYSTEMS

A. Specified systems shall include all required accessories, consisting of, but not limited to, the following: All anchorage devices, shims, fasteners, trim and flashing materials. Extended sills shall be included at window units where indicated. Metal sills shall be thermally broken.

B. Type 4: Nominal 2" (50 mm) wide by 6" (150 mm) deep framing system.
1. “Trifab” by Kawneer Co., Inc.
2. “400 Series” by Tubelite Inc.
3. “Thermo Set” System by United State Aluminum Corporation.

2.04 FABRICATION

A. Fabricate frames allowing for minimum clearances and shim spacing around perimeter of assembly, yet enabling installation.

B. Rigidly fit and secure joints and corners. Make joints and connections flush, hairline, and weatherproof.

C. Develop drainage holes with moisture pattern to exterior.

D. Prepare components to receive anchor devices. Fabricate anchorage items.

E. Arrange fasteners, attachments, and jointing to ensure concealment from view.

F. Reinforce and prepare frames for hardware and other electronic devices.

2.05 FINISHES

A. Exposed aluminum surfaces: Color and finish selected by Owner.

B. Concealed steel items: Galvanized in accordance with ASTM A386.

C. Apply 1 coat of bituminous paint to concealed aluminum and steel surfaces in contact with cementitious or dissimilar materials.

PART 3 EXECUTION

3.01 EXAMINATION

A. Verify wall openings and adjoining air and vapor seal materials are ready to receive framing materials.

B. Beginning of installation means acceptance of adjacent conditions.

3.02 INSTALLATION

A. Install frames in accordance with manufacturer's instructions.

B. Use anchorage devices to securely attach frame assembly to structure.

C. Align assembly plumb and level, free of wrap or twist. Maintain assembly dimensional tolerances, aligning with adjacent work.

D. Coordinate attachment and seal of air and vapor barrier materials. Install sill flashings.

E. Pack fibrous insulation in shim spaces at perimeter of assembly to maintain continuity of thermal barrier.

3.03 TOLERANCES

A. Variation from plane: 0.03"/ft (0.78 mm/m) maximum or 0.25"/30' (6 mm/9 m), whichever is less.

B. Misalignment of two adjoining members abutting in plane: 0.015" (0.4 mm).

3.04 CLEANING

A. Remove protective material from prefinished aluminum surfaces.

B. Wash down exposed surfaces using a solution of mild detergent in warm water, applied with soft, clean wiping cloths. Take care to remove dirt from corners. Wipe surfaces clean.

C. Remove excess sealant by moderate use of mineral spirits or other solvent acceptable to sealant manufacturer.

END OF SECTION

1) A. Baharani
2) C. M. Chamberlin

PART 1 GENERAL

1.01 SECTION INCLUDES

A. Glass types.

B. Glazing materials and accessories.

1.02 RELATED REQUIREMENTS

A. Section 08 41 00 – Aluminum-Framed Storefronts.

1.03 INFORMATIONAL SUBMITTALS

A. Product Data.

1.04 ACTION SUBMITTALS

A. Samples of glazing and components.

PART 2 PRODUCTS

2.01 MANUFACTURERS

A. Guardian Industries.

B. Interpane.

C. Pilkington.

D. PPG Industries, Inc.

E. Viracon, Inc.

F. Materials referenced in this Section are manufactured by PPG Industries, Inc., unless noted otherwise.

2.02 GLASS TYPES

A. Type 11:
1. Low-E glass, insulating double-glazed unit, with heat-strengthened gray exterior lite and heat-strengthened clear float interior lite, with Sungate 100Low-E coating.
2. Quality: q^3 glazing select.
3. Thickness: 1" (25 mm), consisting of 2 lites of 1/4" (6 mm) thick glass with 1/2" (13 mm) sealed air space.
4. Use: Aluminum storefront alternate in accordance with Section 01 20 00.

2.03 GLAZING MATERIALS

A. Glazing compound: Modified oil type, nonhardening, knife grade consistency; color to be selected by Owner after award of Contract.

B. Butyl sealant: Single-component; Shore A durometer hardness of 10-20; black color; nonskinning.

C. Silicone sealant: Single-component, solvent curing; capable of water immersion without loss of properties; nonbleeding; nonstaining; color: to be selected by Owner from manufacturer's standard colors after award of contract.

D. Extruded neoprene or EPDM gaskets.

E. Confirm compatibility of glazing sealants with glass manufacturer.

2.04 GLAZING ACCESSORIES

A. Material and size as recommended by glazing and frame manufacturers.

B. Spacer shims: Material and size as recommended by glazing and frame manufacturers.

C. Glazing tape: Preformed butyl-compound with integral resilient tube spacing device; coiled on release paper; black color.

D. Glazing clips: Manufacturer's standard type.

PART 3 EXECUTION

3.01 INSPECTION

A. Verify surfaces of glazing channels or recesses are clean, free of obstructions, and ready for Work.

B. Beginning of installation means acceptance of substrate.

3.02 PREPARATION

A. Clean contact surfaces with solvent and wipe dry.

B. Seal porous glazing channels or recesses.

C. Prime surfaces scheduled to receive sealant, if recommended by sealant manufacturer.

3.03 INSTALLATION

A. Comply with CPSC 16 CFR C1, FGMA Glazing Manual and SIGMA standards.

B. Install glass in frames in accordance with manufacturer's recommendations.

C. Completed installation shall be weathertight and secure, withstanding normal temperature changes, wind loads and live loads, without failure, including glass breakage and component failure.

D. Do no outside glazing in damp or dusty weather or when temperature is below 40°F (4°C).

E. Protect glass from breakage. At large panels, use cross streamers of tape attached to frames but held off glass surface.

3.04 CLEANING

A. Remove nonpermanent labels, wash, and polish both faces of glass. Comply with glass product manufacturer's recommendations for final cleaning.

B. Remove and replace any damaged or defective glass.

END OF SECTION

1) A. Baharani
2) C. M. Chamberlin

PART 1 GENERAL

1.01 SECTION INCLUDES

A. On-site surface preparation and field painting of surfaces as indicated in "Painting Schedule," this Section.

1.02 WORK EXCLUDED

A. Do not paint following materials, items, and areas unless specifically indicated in "Painting Schedule."
   1. Surfaces of glass, china, vitreous enamel, chrome-plating, rubber, stainless steel, brass, bronze, copper, aluminum, fiberglass, plastic, and galvanized metal.
   2. Lighting fixtures, electrical cabinets, control panels, transformers, and panel boards.
   3. Exterior surfaces of concrete.
   4. Concrete surfaces.
   5. Concrete floors, stairs, and equipment foundations.
   6. Switchplates, nameplates, and finish hardware.
   7. Lubrication fittings, valve stems, and shafting.
   8. Cast iron floor drains, manhole frames, cover, and steps.
   9. Contact surfaces of moving parts and machined surfaces of equipment.
   10. Piping underground or embedded in concrete.
   11. Louvers.
   12. Factory prefinished equipment except touch-up.

1.03 RELATED REQUIREMENTS

A. Section 05 50 00 - Miscellaneous Metal Fabrications: Shop priming on miscellaneous metals.

1.04 INFORMATIONAL SUBMITTALS

A. Product Data:
   1. Manufacturer's product data for each coating, including generic description, complete technical data, surface preparation, and application instructions.
   2. Manufacturer’s standard warranty.

B. Quality assurance:
   1. Manufacturer’s certification that coatings comply with specified requirements and are suitable for intended application.
   2. List of a minimum of 5 completed projects of similar size and complexity to this Work. Include for each project:
      a. Project name and location.
      b. Name of owner.
      c. Name of contractor.
      d. Name of engineer.
      e. Name of coating manufacturer.
      f. Approximate area of coatings applied.
      g. Date of completion.
   3. Coatings applicator(s) credentials including experience and NACE or other certifications. Owner reserves right to reject proposed applicator based on inexperience or lack of credentials.
   4. Coatings application work plan to include:
      a. Surface preparation standards and general overview of procedures for each type of coating/metal/service. Surface preparation work plan shall include blast media, equipment, and measures for containing blast residues. Blast media containment is defined as preventing media entering pipes, drains, and sumps, and appropriate draping and drops to retain and collect bulk of blast media residue allowing residue to be removed from Site and properly disposed of.

b. Coating information for each service shall include coating manufacturer, type, environmental conditions required for application, drying and recoat times, and special manufacturer's instructions.
c. Quality control plan to ensure proper surface preparation and blast profile, correct coatings, uniform application of each coat, and conformance to required thicknesses. Quality control plan shall identify method(s) used to verify coating thicknesses are obtained including measurement types, frequencies, and reporting.
d. Contractor shall adhere to coating application work plan, quality control plan, and manufacturer's instructions.
e. Verification test results showing test locations, method, and thickness.
f. Quality control and other testing forms to be used for documenting conformance to Contract Documents.

5. Demonstrate blasting techniques to Owner for each type of blast required. Blast demonstrations will be performed on metal specimens of same metal as being used and coated on project. After concurrence by Owner on acceptability of blast results for each type of blast, each representative specimen will be coated with a clear polyurethane coat and used as a quality control reference during surface preparation work.

1.05 ACTION SUBMITTALS

A. Samples: Manufacturer's color samples showing full range of standard colors.

1.06 QUALITY ASSURANCE

A. Manufacturer's qualifications:
1. Specialize in manufacture of coatings with a minimum of 10 years successful experience.
2. Able to demonstrate successful performance on comparable projects.
3. Single-source responsibility: Coatings and coating application accessories shall be products of a single manufacturer.
4. Selected manufacturer shall provide list of local or regional coating vendors who have been in business for at least 5 years.

B. Applicator's qualifications:
1. Experienced in application of specified coatings for a minimum of 5 years on projects of similar size and complexity to this Work.
2. Applicator's personnel: Employ persons trained for application of specified coatings.

C. Preapplication meeting: Convene preapplication meeting 2 weeks before start of application of coating systems. Require attendance of parties directly affecting work of this section, including Contractor, Owner, Engineer, applicator, and manufacturer's representative. Review the following:
1. Environmental requirements.
2. Protection of surfaces not scheduled to be coated.
3. Surface preparation.
4. Application.
5. Disinfection.
6. Repair.
7. Field quality control.
8. Cleaning.
9. Protection of coating systems.
10. One-year inspection.
11. Coordination with other work.

D. Mock-ups: Prepare 10' x 10' mock-up for each coating system specified using same materials, tools, equipment, and procedures intended for actual surface preparation and application. Obtain Engineer's approval of mock-ups. Retain mock-ups to establish intended standards by which coating systems will be judged.

1.07 DELIVERY, STORAGE, AND HANDLING

A. Delivery: Deliver materials to site in manufacturer's original, unopened containers and packaging, with labels clearly identifying:
   1. Coating or material name.
   2. Manufacturer.
   3. Color name and number.
   4. Batch or lot number.
   5. Date of manufacture.
   6. Mixing and thinning instructions.

B. Storage:
   1. Store materials in a clean dry area and within temperature range in accordance with manufacturer's instructions.
   2. Keep containers sealed until ready for use.
   3. Do not use materials beyond manufacturer’s shelf life limits.

C. Handling: Protect materials during handling and application to prevent damage or contamination.

1.08 ENVIRONMENTAL REQUIREMENTS

A. Weather:
   1. Air and surface temperatures: Prepare surfaces and apply and cure coatings within air and surface temperature range in accordance with manufacturer’s instructions.
   2. Surface temperature: Minimum of 5°F (3°C) above dew point.
   3. Relative humidity: Prepare surfaces and apply and cure coatings within relative humidity range in accordance with manufacturer’s instructions.
   4. Precipitation: Do not prepare surfaces or apply coatings in rain, snow, fog, or mist.
   5. Wind: Do not spray coatings if wind velocity is above manufacturer’s limit.
   6. Protect surfaces and work from elements as necessary to provide appropriate conditions for application and curing.
   7. Provide acceptable environmental conditions including heating, cooling, and ventilating for coatings application and curing if seasonal weather prevailing at time of coatings application is not conducive to coatings application.

B. Ventilation: Provide ventilation during coating evaporation stage in confined or enclosed areas in accordance with AWWA D102.

C. Dust and contaminants:
   1. Schedule coating work to avoid excessive dust and airborne contaminants.
   2. Protect work areas from excessive dust and airborne contaminants during coating application and curing.

PART 2 PRODUCTS

2.01 MANUFACTURERS

A. Carbonline.

B. DuPont.

C. Induron.

D. Pittsburg Paints.

E. Sherwin Williams Company.

F. Tnemec Company, Incorporated.

2.02 MATERIALS

A. Coating materials listed under "Coating System" are manufactured by Tnemec Company, except as indicated otherwise.

B. Paint accessory materials: Linseed oil, turpentine, and other materials not specifically indicated herein but required to achieve finishes specified of high quality and approved manufacturer.

C. Paints: Ready-mixed except field catalyzed coatings. Pigments fully ground maintaining soft paste consistency, capable of readily and uniformly dispersing to complete homogeneous mixture.

D. Paints to have good flowing and brushing properties and be capable of drying or curing free of streaks or sags.

E. Coating systems:
1. System A:
   a. Type: Aromatic/Epoxy/Urethane.
   b. Surface preparation: SSPC-SP 6, 1.8 mil blast profile, 1.5 to 2.0 mil range.
2. Primer: Zinc-rich, epoxy or aromatic urethane suitable for exterior, nonimmersion service and compatible with intermediate and finish coats. Series 90-97.
   a. Zinc content, minimum: 80% by weight in dry film.
   b. Solids content, minimum: 60% mixed
   c. DFT 2.5 to 3.5 mils.
   d. Intermediate coat: Series N69 Hi-Build Epoxoline II DFT 2.5 to 3.5 mils.
   e. Finish coat: Series 1073 or 1074 Endura-Shield, DFT 2.5 to 3.5 mils.
   f. Total DFT: 7.5 to 10.5 mils.
   g. Use: Exterior steel surfaces, non-immersion.
3. System B:
   a. Type: Coal tar epoxy.
   b. Surface preparation: SSPC-SP 10, 2.0 mil blast profile.
   c. Primer: Series N69 Hi-Build Epoxoline II, DFT 3.0 to 5.0 mils.
   d. Finish coat: Series 46H-413 Hi-Build Tneme-Tar. DFT 14.0 to 20.0 mils.
   e. Total DFT: 17.0 to 25.0 mils.
   f. Use: Exterior below grade steel surfaces.
4. System C:
   a. Surface preparation: SSPC-SP 5, 1.8 mil blast profile, 1.5 to 2.0 mil range.
   b. Primer: Series 446 Perma-Shield, DFT 7.0 to 10.0 mils.
   c. Finish coat: Series 446 Perma-Shield, DFT 7.0 to 10.0 mils.
   d. Total DFT: 14.0 to 20.0 mils
   e. Alternate: Induron Cermasafe Ceramic Filled amine cured epoxy. Spray applied 2 wet coats. Total DFT: 25 to 36 mils.
   f. Use: Interior and exterior steel surfaces, non-immersion (severe exposure).
5. System E:
   a. Surface preparation: SSPC-SP 5, 1.8 mil blast profile, 1.5 to 2.0 mil range.
   b. Primer:
      1) Hydrophobic aromatic polyurethane suitable for immersion service in wastewater and compatible with finish coats. Solids content, minimum: 70% mixed.
      2) Series 446 Perma-Shield,. DFT 7.0 to 10.0 mils.
      3) Finish coat: Series 446 Perma-Shield, or equal. DFT 7.0 to 10.0 mils.
      4) Total DFT: 14 to 20 mils.
      5) Alternate: Induron Cermasafe Ceramic Filled amine cured epoxy. Spray applied 2 wet coats. Total DFT: 25 to 36 mils. Finish color: As selected by Owner from manufacturer’s standard colors.
   c. Coats shall have differing colors to assist with uniform application.
   d. Use: Immersion including 1’ above liquid level or non-immersion steel.
6. System G:
   a. Surface preparation: Solvent clean.

b. First coat: 27-1255 Typoxy, epoxy-polyamide coating, 3.0 mils DFT.
c. Second coat: 74 Endura-Shield, high-build acrylic polyurethane enamel, 3.0 mils DFT.
d. Use: Exterior galvanized steel surfaces, nonimmersion (mild exposure).

7. System H:
   a. Type: Vinyl ester
   b. Surface preparation: Brush-off blast cleaning for concrete and white blast cleaning for steel.
   c. First coat: 120-5002 Vinester, vinylester, 12.0 mils DFT.
   d. Second coat: 120-5001 Vinester, vinylester, 12.0 mils DFT.
   e. Use: Digester interior concrete walls and steel surfaces.
8. System I:
   a. Type: Epoxy.
   b. Surface preparation: Clean and dry.
   c. Primer: Series N69 Hi-Build Epoxoline II. DFT 4.0 to 6.0 mils.
   d. Finish coat: Series N69 Hi-Build Epoxoline II. DFT 4.0 to 6.0 mils.
   e. Total DFT: 8.0 to 12.0 mils.
   f. Use: Interior concrete masonry.
9. System J:
   a. Type: Vinyl-acrylic/acrylic-epoxy.
   b. Surface preparation: Clean and dry.
   c. Primer: Series 51-792 PVA Sealer. DFT 1.0 to 2.0 mils.
   d. Finish coat: Series N69 Hi-Build Epoxoline II. DFT 5.0 to 7.0 mils.
   e. Total DFT: 5.0 to 8.0 mils.
   f. Use: Interior gypsum drywall and plaster.
10. System L:
    a. Type: Epoxy/urethane.
    b. Surface preparation: Clean and dry.
    c. Primer: Factory primed.
    d. Intermediate coat: Series 27 Typoxy. 2.0 to 3.0 mils DFT.
    e. Finish coat: Series 73 Endura-Shield. 2.0 to 3.0 mils DFT.
    f. Total DFT: 4.0 to 6.0 mils.
    g. Use: Exterior and interior primed ferrous metals.
11. System M:
    a. Type: Epoxy.
    b. Surface preparation: In accordance with manufacturer's instructions
    c. Primer: Series N69 Hi-Build Epoxoline II. DFT 3.0 to 5.0 mils.
    d. Finish coat: Series N69 Hi-Build Epoxoline II. DFT 4.0 to 6.0 mils.
    e. Total DFT: 7.0 to 10.0 mils
    f. Use: Asphaltic-coated ductile iron pipe.
12. System N:
    a. Type: Acrylic.
    b. Surface preparation: Clean. Dry and contaminate free.
    c. Primer: Series 180 W.B. Tneme-Crete. DFT 4.5 to 8.0 mils.
    d. Finish coat: Series 180 W.B. Tneme-Crete. DFT 4.5 to 8.0 mils.
    e. Total DFT: 9.0 to 16.0 mils.
    f. Use: Nonimmersion concrete.
13. System P:
    a. Finish coat: 2 coats Armorseal 1000 HS, B67 Series.
    b. Use: Concrete floors.
14. System Q:
    a. Type: Epoxy
    b. Surface preparation: In accordance with manufacturer's instructions.
    c. Manufacturer: Phenicon HS Flak Filled, Part A – 920-R-A11, Part B – 700-C-825, Sherwin-Williams, or equal.
    d. Use: Concrete spill containment.

F. Colors shall be selected after award of Contract.

PART 3 EXECUTION

3.01 PAINTING – GENERAL

A. Provide surface preparation, materials, equipment, and labor for painting specified.

B. Apply coating materials and finishes to surfaces of new exposed Work, except surfaces specifically excluded hereinafter. Existing construction shall be painted only where disturbed by new work.

C. Prime unprimed field-fabricated material in manner specified in this Section.

D. Touch up factory-applied and other completed finishes using methods and materials which produce repaired surface closely matching original finish.

E. Remove rough areas of structural steel using grinder or other applicable power tools to smooth rough areas on structural steel resulting from cutting and welding.

F. Paint surfaces of physical hazards in accordance with OSHA Section 1910.144.

G. Determine compatibility of primers with paints to be applied over them. If priming, undercoating, or finish coating specified does not conform in every way to recommendations of manufacturers, prepare schedule of recommended coatings and submit to Owner for review. Any resulting changes shall be made at no additional cost to Owner.

3.02 EXAMINATION

A. Examine areas and conditions under which coating systems are to be applied. Notify Owner of areas or conditions not acceptable. Do not begin surface preparation or application until unacceptable areas or conditions have been corrected.

3.03 PROTECTION OF SURFACES NOT SCHEDULED TO BE COATED

A. Protect surrounding areas and surfaces not scheduled to be coated from damage during surface preparation and application of coatings.

B. Furnish sufficient drop cloths, shields, and protective equipment to prevent spray or droppings from fouling surfaces not being painted and in particular, surfaces within storage and preparation area.

C. Place cotton waste, cloths, and material which may constitute a fire hazard in closed metal containers and remove daily from Site.

D. Protect electrical plates, nameplates, surface hardware, fittings, and fastenings, prior to painting operations. Do not use solvent to clean hardware that may remove permanent lacquer finish.

E. Immediately remove coatings that fall on surrounding areas and surfaces not scheduled to be coated.

3.04 ENVIRONMENTAL REQUIREMENTS

A. Weather:
   1. Air and surface temperatures: Prepare surfaces and apply and cure coatings within air and surface temperature range in accordance with manufacturer's instructions.
   2. Surface temperature: Minimum of 5°F (3°C) above dew point.
   3. Relative humidity: Prepare surfaces and apply and cure coatings within relative humidity range in accordance with manufacturer's instructions.
   4. Precipitation: Do not prepare surfaces or apply coatings in rain, snow, fog, or mist.
   5. Wind: Do not spray coatings if wind velocity is above manufacturer's limit.

B. Ventilation: Provide ventilation during coating evaporation stage in confined or enclosed areas in accordance with AWWA D102.

C. Dust and contaminants:
   1. Schedule coating work to avoid excessive dust and airborne contaminants.
   2. Protect work areas from excessive dust and airborne contaminants during coating application and curing.

3.05 PREPARATION OF SURFACES

A. Surface preparation shall conform to recommendations of paint manufacturer and these Specifications to ensure satisfactory performance of each coating system.

B. Rooms and spaces: Broom-clean before field painting is started.

C. Surfaces, before painting and between coats, shall be dry, smooth and free from dust, rust, loose mill scale, grease, grit, and frost.

D. Wire brushing shall be used only to remove loose dirt.

E. Galvanized steel not phosphatized and aluminum surfaces: Wash clean with solvent in accordance with SSPC-SP1; scrub wetted surfaces with metal scouring pad.

F. Iron and steel:
   1. Cleaning methods: Conform to applicable requirements of Steel Structures Painting Council:
      a. Solvent cleaning: SSPC-SP1.
   2. Power tool cleaning: SSPC-SP3.
      a. Commercial blast cleaning: SSPC-SP6.
      b. Near-white blast cleaning: SSPC-SP10.
      c. White blast cleaning: SSPC-SP5.
   3. Blast cleaning requirements:
      a. Nonsubmerged: SSPC-SP6.
      b. Submerged or buried: SSPC-SP10.
      c. Digester and sludge equalization tank interior submerged or nonsubmerged steel: SSPC-SP5.
   4. Cleaning for other field painting: SSPC-SP3.
   5. Removal of materials such as grease and oil: SSPC-SP1.
   6. Surface irregularities from blasting shall be approximately 30% of total paint system dry mil thickness.
   7. Blast profile requirement for all SSP6-SP10 abrasive blast-cleaned surfaces to be 1.5 mil.

G. Masonry:
   1. Curing time: Minimum 60 days. Surface moisture must conform to requirements listed hereinafter.
   2. Patch cracks and holes with mortar or patching compound.
   3. Remove chalk, dust, dirt, and efflorescence by scraping and brushing.

H. Concrete:
   1. Curing time: Minimum 60 days. Surface moisture must conform to requirements listed hereinafter.
   2. Remove dust, form oil, and curing compounds.
   3. If smooth, etch by washing with solution of muriatic acid; remove laitance to secure proper bond of paint.
   4. Wash clean with water.
   5. Areas subject to immersion shall be brush-blast cleaned.

I. Plaster:
   1. Curing time: Minimum 28 days.
   2. Remove protrusions by scraping.

3. Remove grease and oil by hot cleaning solution of 2 lb. of trisodium phosphate to each gallon of water.
4. Wash clean with water.
5. Patch voids and cracks; sand flush.

J. Hollow metal and factory-finished equipment:
1. Clean off oil and grease by use of proper solvent.
2. Remove scale and rust by scraping or with wire brushes.
3. Touch up abrasions and marred spots of surface coating.

K. Gypsum board:
1. Prepare gypsum board surfaces in accordance with manufacturer's instructions.
2. Ensure surfaces are clean, dry, and free of oil, grease, dirt, dust, and other contaminants.
3. Sand joint compound smooth and feather edge.
4. Avoid heavy sanding of adjacent gypsum board surfaces, which will raise nap of paper covering.
5. Do not apply putty, patching pencils, caulking, or masking tape to drywall surfaces to be painted.
6. Lightly scuff-sand tape joints after priming to remove raised paper nap. Do not sand through primer.

L. Wood:
1. Prepare wood surfaces in accordance with manufacturer's instructions.
2. Ensure surfaces are clean, dry, and free of oil, grease, dirt, dust, surface deposits of sap or pitch, and other contaminants.
3. Seal knots and pitch pockets.
4. Sand rough spots with the grain.
5. Fill cracks and holes with approved materials after primer is dry. Sand flush with surface when filler is hard.
6. Lightly sand between coats.

3.06 APPLICATION

A. Apply coatings in accordance with manufacturer's instructions.

B. Mix and thin coatings, including multi-component materials, in accordance with manufacturer's instructions.

C. Keep containers closed when not in use to avoid contamination.

D. Do not use mixed coatings beyond pot life limits.

E. Use application equipment, tools, pressure settings, and techniques in accordance with manufacturer's instructions.

F. Uniformly apply coatings at spreading rate required to achieve specified dry film thickness.

G. Apply coatings to be free of film characteristics or defects that would adversely affect performance or appearance of coating systems.

H. Stripe paint with brush critical locations on steel such as welds, corners, and edges using specified primer.

3.07 REPAIR

A. Materials and surfaces not scheduled to be coated: Repair or replace damaged materials and surfaces not scheduled to be coated.

B. Damaged Coatings: Touch-up or repair damaged coatings. Touch-up of minor damage shall be acceptable where result is not visibly different from adjacent surfaces. Recoat entire surface where touch-up result is visibly different, either in sheen, texture, or color.

C. Coating Defects: Repair in accordance with manufacturer's instructions coatings that exhibit film characteristics or defects that would adversely affect performance or appearance of coating systems.

D. One-year inspection:
   1. Owner will set date for one-year inspection of coating systems.
   2. Inspection shall be attended by Owner, Contractor, and manufacturer's representative.
   3. Repair deficiencies in coating systems as determined by Owner in accordance with manufacturer's instructions.

3.08 MANUFACTURER'S FIELD SERVICES

A. Manufacturer's representative shall provide technical assistance and guidance for surface preparation and application of coating systems.

3.09 CLEANING

A. Remove temporary coverings and protection of surrounding areas and surfaces.

3.10 PROTECTION OF COATING SYSTEMS

A. Protect surfaces of coating systems from damage during construction.

3.11 CLEANING

A. As Work proceeds and upon completion, promptly remove paint where spilled, splashed, or spattered.

B. During progress of Work keep premises free from any unnecessary accumulation of tools, equipment, surplus materials, and debris.

C. Upon completion of Work leave premises neat and clean.

3.12 PAINTING SCHEDULE

A. Apply specified coatings to items indicated in schedule below:

Item	System
Exterior Items	
Hollow metal doors and frames	L
Steel lintels	L
Steel guard posts	L
Miscellaneous exposed ferrous metal	L
Cement plaster	J
Ferrous piping and valves (nonsubmerged)	A
Miscellaneous nonsubmerged ferrous metals (unless otherwise specified)	A
Coiling doors	L
Interior Items	
Hollow metal doors and frames	L
Steel lintels	L
Concrete masonry	I
Miscellaneous exposed ferrous metals	L
Pumps and motors (nonsubmerged)	C
Ferrous piping and valves (nonsubmerged)	C
Miscellaneous nonsubmerged ferrous metals (unless otherwise specified)	C
Exposed coated ductile iron pipe	M
Coiling doors	L

B. Refer to Section 40 23 36 for piping color code.

C. Omission of paint from contact surfaces of connections where high-strength bolts are used shall conform to AISC "Specification for Structural Joints Using ASTM A325 or A490 Bolts."

D. Metals furnished under this Contract requiring primer shall have primer applied in shop, unless specified otherwise.

E. Apply field coats to cleaned surfaces of bolts, field welds, omissions, and abrasions to shop coats.

END OF SECTION

1) J. M. Brady
2)

PART 1 GENERAL

1.01 SECTION INCLUDES

A. Curtain strips and accessories.

1.02 INFORMATIONAL SUBMITTALS

A. Product Data: Data indicating physical and dimensional characteristics, operating features, and material list.

B. Shop Drawings: Indicate sizes, tolerances required, method of attachment, clearances, and operation.

C. Samples: Two samples, 10” (250 mm) long illustrating strip materials and finish, type and color for each accessory.

D. Quality assurance data: Manufacturer's Installation Instructions including special procedures, perimeter conditions requiring special attention.

1.03 FIELD MEASUREMENTS

A. Verify field measurements prior to fabrication.

1.04 COORDINATION

A. Coordinate Work with installation and placement of mounting rods.

1.05 WARRANTY

A. Provide manufacturer’s standard written warranty.

PART 2 PRODUCTS

2.01 MANUFACTURERS

A. Akon Curtain and Divider.

B. Materials referenced in this Section are manufactured by Akon Curtain and Divider, unless noted otherwise. Equivalent products from other manufacturers are acceptable.

2.02 CURTAIN

A. Type: Clear, flat, heavy-duty.

B. Material: PVC vinyl.

C. Size: 60” (1.5 m) wide, 9’-0” (2.7 m) long; 0.120” gage.

D. Mount:
1. Sliding mount from ceiling.
2. Use appropriate mount for hollow core pre-cast concrete plank roof deck.
3. Manufacturer’s recommended size and quantity of rods and brackets for mounting.
4. Material: Stainless steel.

E. Provide unit with necessary hardware for complete installation.

PART 3 EXECUTION

3.01 EXAMINATION

A. Verify ceiling is ready to receive work.

B. Verify structural supports are correctly placed.

3.02 EXISTING WORK

A. Patch surfaces.

3.03 INSTALLATION

A. Installation shall comply with manufacturer’s specifications, standards, and procedures.

B. Secure in place with fasteners.

C. Install curtain strips plumb, level, and true with connecting hardware.

END OF SECTION

1) A. Baharani
2) C. M. Chamberlin

PART 1 GENERAL

1.01 SECTION INCLUDES

A. Motor starters.

B. Factory-wired panels.

C. Wiring.

D. Equipment guards.

1.02 DEFINITIONS

A. Factory-wired panel: Control or electrical panel included with mechanical equipment wired in factory by equipment supplier. All wiring within panel completed at factory and panel has terminals for incoming power wiring.

B. Power wiring: Circuitry carrying electrical energy from panelboard or other central distribution point to motor through motor starter protection devices and disconnect, or to main terminals in FWP; and final connections. Power wiring and raceway as specified in Division 26.

1.03 INFORMATIONAL SUBMITTALS

A. Quality assurance data: Certified records, indicating that procedures used and welding operators employed are in compliance with codes referenced in article "Quality Assurance."

1.04 QUALITY ASSURANCE

A. Certifications: New materials and equipment shall bear manufacturer's name, model number, or other identification marking.

B. Standard product shall be of latest design with published properties of manufacturer regularly engaged in production of specified material or equipment for minimum 5 years.

C. Unless otherwise indicated, equipment of same type in same room shall match color, finish, and design.

D. Standardization: Equipment and its devices shall be of same manufacturer; or devices must be approved and warranted by equipment manufacturer

E. Building codes and permits:
   1. Obtain and pay for all construction permits and licenses. Owner shall assist Contractor, when necessary, in obtaining such permits and licenses.
   2. Pay governmental charges and inspection fees necessary for prosecution of Work, which are applicable at time of opening of Bids. Pay charges of utility service companies for connections to Work. Owner will pay charges of such companies for capital costs related thereto.
   3. Give notices and comply with laws, ordinances, building and construction codes, rules, and regulations applicable to Work. If Contractor observes Specifications or Drawings are at variance therewith, give Engineer prompt written notice thereof, and any necessary changes shall be adjusted by appropriate Modification.
   4. If Contractor performs any Work knowing or having reason to know that Work is contrary to such laws, ordinances, rules, and regulations, and without such notice to Engineer, Contractor shall bear all costs arising therefrom. However, it shall not be Contractor's primary responsibility to make certain that Specifications and Drawings are in accordance with such laws, ordinances, rules, and regulations.

1.05 COORDINATION

A. Coordinate with all trades regarding location and size of pipes, equipment, ducts, openings, light fixtures, and other similar items mutually located in same or adjacent spaces.

B. Drawings are diagrammatic; however, items on Drawings are shown at approximate locations. Contractor shall modify locations of equipment, piping, ducts, etc to suit actual conditions, and provide for access and clearances.
   1. Route piping and ducts parallel to building lines, except for slope.
   2. Protection of electrical equipment: Avoid locating equipment, piping, ducts, etc, over electrical equipment. As approved by Owner, provide drip pans over electrical equipment where locating equipment, piping, ducts, etc. above electrical equipment is unavoidable.

C. Due to scale of Drawings, not all items are shown on drawings. Provide items not shown but required for complete operating systems.

D. Due to scale of Drawings, do not scale Drawings to determine exact locations. Locations shall be determined by field measurements or other means.

E. Make minor modifications in Work required by interferences (structural, work of other trades) following notification to Engineer.

F. Order of priorities:
   1. Recessed lighting fixtures.
   2. Ductwork system.
   3. Slopped nonpressurized plumbing piping including, but not limited to, waste, vents, and roof drains.
   4. Refrigeration piping.
   5. Sprinkler piping.
   6. HVAC piping.
   7. Pressurized plumbing piping including, but not limited to, water, natural gas, compressed air, and vacuum.
   8. Electrical conduit.
   9. Control air piping or conduit.

1.06 OPENINGS, SLEEVES, AND CHASES

A. Each equipment and piping supplier shall provide:
   1. Opening and hole information through floors, walls, and roofs for its work; including all pipe, conduit, duct sleeves, inserts, hangers, and flashing and sealant for those openings and holes.
   2. Exact information to others as to size, depth, and location of such openings before construction is in place; and delivery and setting in place of boxes, sleeves, inserts, and forms for its work in time for installation in all locations.
   3. Cutting, patching, and restoration to accommodate Contractor's failure to provide specified data in time for openings to be left or to accommodate boxes, sleeves, inserts, or forms after construction.
   4. Skilled craftsman to cut, patch, rebuild, restore, replace, refinish, and repaint new construction that has been cut, disturbed, or marred to original new condition; for installation of new, exposed, concealed, underground, or underfloor work; for admission of new work and equipment; for installation of new equipment and new work in new construction; for complete restoration of pipe, duct, or equipment covering disturbed or marred by its personnel.
   5. Cutting:
      a. Use core drill or radial saw.
      b. Cutting of lintels, structural steel, or reinforcement not permitted.

PART 2 PRODUCTS

2.01 DESIGN REQUIREMENTS

A. Design is based on specified or scheduled equipment. Modify work to incorporate changes for alternate, “or equal”, or substitute manufacturer’s equipment at no additional cost. Changes shall include, but not be limited to:
   1. Equipment dimensions.
   2. Framing and support.
   3. Manufacturer recommended maintenance clearances and access.
   4. Pipe connections, location and sizes.
   5. Duct connections, location and sizes.
   6. Electrical requirements including, but not limited to:
      a. Wire sizes.
      b. Conduit.
      c. Disconnects.
      d. Starters.
      e. Breakers.
      f. Fuses.
      g. Switches.
      h. Transformers.

2.02 MOTORS AND STARTERS

A. Motors shall be ODP squirrel cage induction motors in NEMA frames suitable for operation on 480-volt ac, 3-phase, 60 Hz, as specified in Division 26, unless noted otherwise.

B. Where variable frequency drives are specified provide induction duty motors as specified in Division 26.

C. Motors shall have 1.15 service factor rated at 40ºC ambient temperature (Class B insulation) with 40ºC temperature rise.

2.03 FACTORY-WIRED PANEL

A. Provide as part of equipment package; including starters, interconnecting wiring, including field wiring, between panel and associated equipment disconnects (except for disconnects indicated on Drawings on line side of factory-wired panel, control transformers, integral control devices, and pre-wired controls; ready for final control and power connections.

2.04 WIRING

A. Provide wiring not indicated on Drawings including temperature control wiring, flow switches, control modules, smoke detectors part of specified HVAC control systems, and electrical conduit, wire and connections related to mechanical equipment controls.

B. Automatic temperature control wiring for control work specified in Section 23 09 13 shall be furnished and installed by control manufacturer.

2.05 GUARDS

A. Provide guards for drives on equipment that are belt, chain, or gear-driven or with rotating elements such as shaft couplings, sheaves, and shafts with projecting set screws and keys.

B. Belt guards shall enclose both pulleys and belts on exposed sides; 14-gage (1.8 mm) galvanized steel top and bottom with expanded or solid metal front locked into rim.

C. Assembly shall be supported by supplementary steel. Provide for greasing, oiling, adjusting, and checking of equipment.

D. Provide coupling guards on direct connected units.

E. Comply with UL safety requirements.

PART 3 EXECUTION

3.01 INSTALLATION - GENERAL

A. Work provided shall be complete and operable, and shall include required accessories, specialties, fastenings, supports, auxiliary building steel, and similar items.

B. Determine required location, arrangement, and quantities of equipment and materials from Drawings.

C. Equipment shall be installed in accordance with manufacturers' recommendations.

D. Power wiring and interconnection of electrical accessories specified under this Division will be performed under Division 26 unless otherwise indicated.

END OF SECTION

1) J. J. Bovenkamp
2)

Stanley Consultants INC.

PIPE CLASS SPECIFICATION - ACS6

MAWP	TEMP, °F	100	200	300	353						
	PRESS, PSIG	150	135	110	100						

PIPE	MATERIAL, ASTM	A53 GR B TYPE E OR S (NOTE 6)	
	NOMINAL PIPE SIZES AND SCHEDULE	1/2" - 24"	STD

JOINT	TYPE	THREADED	SOCKET WELD	BUTT WELD	FLANGED
	USE FOR PIPE SIZES	1/2" - 2"	NONE	2-1/2" - 24"	NONE

FITTINGS	MATERIAL, ASTM	A197		A234 WPB	
	PRESS CL, ASME B16.3	150			
	MINIMUM WALL THICKNESS			MATCH PIPE	
	WELDING END			ASME B16.25	
	UNIONS	GROUND JOINT		NONE	

FLANGES	MATERIAL, ASTM	A105
	PRESS CL, ASME B16.5	150
	FACING	FF SERRATED
	GASKETS, ASME B16.21	FULL FACE 1/16" SYNTHETIC FIBER WITH NBR BINDER, GARLOCK BLUE-GARD 3000 OR EQUAL, UNLESS SPECIFIED OTHERWISE.
	BOLTING	A307 GR B STUD BOLTS & A194 GR 2H HEX NUTS

GENERAL NOTES & COMMENTS:

1. BACKING RINGS NOT PERMITTED.
2. BUTT WELD END PREPARATIONS
   A. NOMINAL PIPE WALL THICKNESSES 0.375" AND LESS: CONFORM TO ASME B16.25, FIGURE 2, DETAIL (A).
3. BUTT WELD FITTINGS MAY BE WPB SEAMLESS OR WPBW WELDED.
4. FLANGE CONNECTIONS TO EQUIPMENT AND VALVES ONLY.
5. FLANGES SHALL BE WELD NECK OR SLIP-ON.
6. FOR HOT WATER SERVICE AT PRESSURES ABOVE 100 PSIG AND TEMPERATURES ABOVE 220 °F, THREADED PIPE SHALL BE SCHEDULE 80 SEAMLESS, A53 GR B OR A106 GR B.

NO.	REVISION	DATE	DESIGN	CHECK	APVD	
						ASME CLASS 125
						TYPE E OR S CARBON STEEL
1	GENERAL	1-Oct-08	DDB	MSW	MAE	NO.
0	REVISION 0	28-Apr-06	AGP	JJN	MAE	**ACS6**

M-1711

Stanley Consultants INC.

PIPE CLASS SPECIFICATION - ACU1

MAWP	TEMP, °F	100	150	200	250						
	PRESS, PSIG	150	150	135	125						

TUBING	MATERIAL	ASTM B88 HARD DRAWN COPPER	
	TUBING SIZE AND WALL THICKNESS	THRU 6"	TYPE K
		8"	TYPE L

JOINT	TYPE	SOLDERED, FLANGED WHERE REQUIRED
	SOLDER	ASTM B32 GRADE Sb5 (95-5 TIN ANTIMONY)
FITTINGS	TYPE	ASME B16.18 CAST COPPER ALLOY
		ASME B16.22 WROUGHT COPPER AND COPPER ALLOY
	CONNECTIONS TO FERROUS PIPING OR EQUIPMENT	DIELECTRIC UNIONS OR FLANGES

GENERAL NOTES & COMMENTS:

1. THIS PIPE CLASS SPECIFICATION SHALL NOT BE USED FOR STEAM OR CONDENSATE, OR FOR FLAMMABLE OR TOXIC LIQUIDS OR GASSES. USE FOR COMPRESSED AIR SHALL BE LIMITED TO 3" NOMINAL SIZE AND LESS.
2. SOLDER SHALL BE "LEAD-FREE" (LESS THAN OR EQUAL TO 0.2% LEAD).

NO.	REVISION	DATE	DESIGN	CHECK	APVD	
						ASME CLASS 125
						HARD DRAWN COPPER
1	ADDED NOTE 2	26-May-06	TJL	MRF	MAE	NO.
0	REVISION 0	14-Dec-04	AAM	AGP	MAE	**ACU1**

M-1725

Stanley Consultants INC.

PIPE CLASS SPECIFICATION - ADI1

MAWP	TEMP, °F	120									
	PRESS, PSIG	150									

PIPE	MATERIAL	DUCTILE IRON ANSI/AWWA C151/A21.51
	SIZES (INCLUSIVE)	3" THRU 48"
	MINIMUM THICKNESS	CLASS 53 ANSI/AWWA C150/A21.50
JOINT	TYPE	THREADED FLANGE ANSI/AWWA C115/A21.15
	RATED WORKING PRESSURE	250 PSI MINIMUM ANSI/AWWA C115/A21.15
FITTINGS	TYPE	FLANGED ANSI/AWWA C110/A21.10
	MATERIAL	DUCTILE IRON OR GRAY IRON
	RATED WORKING PRESSURE	150 PSI MINIMUM ANSI/AWWA C110/A21.10
	GASKETS	FULL FACE, 1/16" RED RUBBER (SBR) ANSI/AWWA C111/A21.11
	BOLTS	ASTM A307 GR B
	NUTS	ASTM A194 2H HEAVY HEX

GENERAL NOTES & COMMENTS:

1. PROVIDE CEMENT-MORTAR LINING AND SEAL COAT PER ANSI/AWWA C104/A21.4.

NO.	REVISION	DATE	DESIGN	CHECK	APVD	
						150 PSIG AT 120°F
						DUCTILE IRON PIPE
						NO.
0	REVISION 0	14-Dec-04	AAM	AGP	MAE	**ADI1**

M-1730

Stanley Consultants INC.

PIPE CLASS SPECIFICATION - APE5

MAWP	TEMP, °F	73	140	180							
	PRESS, PSIG	150	110	100							

TUBING	MATERIAL	ASTM F876 CROSSLINKED POLYETHYLENE (PEX), HDB = 1250PSI (73°F)
	MATERIAL DESIGNATION CODE	PEX 5306, 5206, 5106, 5006
	TUBING	ASTM F876 AND F877
	NOMINAL PIPE SIZE AND SDR	3/8" - 2" 9

	TYPE	INSERT	COMP. SLEEVE	COMP. RING	MECHANICAL	COLD FLARING	PUSH-FIT
FITTINGS	STANDARD	F1807,F2159, F2834	F1865, F2080	F1960	F1961	F877	F2854
	USE FOR SIZES	3/8" - 2"	3/8" - 2"	3/8" - 2"	3/8" - 3/4"	3/8" - 2"	1/2" - 1 1/4"

GENERAL NOTES & COMMENTS:

1. INSTALL IN ACCORDANCE WITH MANUFACTURER'S RECOMMENDATIONS AND FITTINGS AND PPI STANDARDS.
2. MAXIMUM TEMPERATURE FOR CONTINUOUS HOT WATER CIRCULATION 140 °F TO MAINTAIN CHLORINE RESISTANCE.
3. MAXIMUM SIZE FOR RADIANT HEATING WATER 2".
4. PROVIDE SWEAT ADAPTERS FOR CONNECTION TO COPPER TUBING.
5. INSULATION NOT REQUIRED UNLESS SPECIFIED OTHERWISE.
6. PROVIDE MANUFACTURER'S STANDARD PIPING MANIFOLD WHERE NOTED ON DRAWINGS.
7. INSTALL IN ACCORDANCE WITH LOCAL PLUMBING CODE FOR DOMESTIC WATER SYSTEMS. FITTINGS SHALL BE SELECTED TO COMPLY WITH LOCAL PLUMBING CODE.
8. MATERIALS IN CONTACT WITH POTABLE WATER SHALL BE CERTIFIED IN ACCORDANCE WITH NSF/ANSI STANDARD 14 - PLASTIC PIPING SYSTEM COMPONENTS, NSF/ANSI STANDARD 61 - DRINKING WATER SYSTEM COMPONENTS - HEALTH EFFECTS, AND ANSI/AWWA C904.
9. TUBING INSTALLED IN CEILING CAVITY PLENUM SHALL BE PERMITTED PER NFPA 90A IF IT EXHIBITS A FLAME SPREAD INDEX OF 25 OR LESS AND A SMOKE DEVELOPMENT INDEX OF 50 OR LESS WHEN TESTED IN ACCORDANCE WITH ASTM E84. CHECK MANUFACTURER'S LIMITATIONS.
10. INDOOR INSTALLATION ONLY. PREVENT FROM OVEREXPOSURE TO SUNLIGHT (UV LIGHT).
11. FOR RADIANT HEAT APPLICATIONS CONTAINING OXIDATIVE OR FERROUS PARTS, UTILIZE TUBING WITH AN OXYGEN DIFFUSER BARRIER. (NOT ALLOWED FOR POTABLE WATER).
12. ELECTROFUSION FITTINGS SHALL BE LIMITED TO 140 °F MAXIMUM USAGE TEMPERATURE PER ASTM F1055.

						150 PSIG AT 73°F
						PEX TUBING
1	GENERAL	31-Mar-17	JJO	JC	MAE	NO.
0	REVISION 0	28-Apr-06	AGP	JJB	MAE	**APE5**
NO.	REVISION	DATE	DESIGN	CHECK	APVD	

M-1761

Stanley Consultants INC.

PIPE CLASS SPECIFICATION - ASS3

MAWP	TEMP, °F	-40	150								
	PRESS, PSIG	5	5								

TUBING	MATERIAL, ASTM - TUBING	A240 TYPE 300 SERIES STAINLESS STEEL	
	MATERIAL - JACKET	POLYETHYLENE, UV RESISTANT (NOTE 4)	
	NOMINAL PIPE SIZES AND WALL THICK.	3/8" - 1"	0.010"
		1 1/4" - 2"	0.012"

FITTINGS	MATERIAL, ASTM	IN ACCORDANCE WITH ANSI LC 1 / CSA 6.26
	TYPE	IN ACCORDANCE WITH ANSI LC 1 / CSA 6.26 AND MANUFACTURER'S RECOMMENDATION

GENERAL NOTES & COMMENTS:

1.	FOR USE IN NATURAL GAS AND LIQUIFIED PETROLEUM GAS (LPG) SYSTEMS.
2.	PIPING SYSTEM AND COMPONENTS SHALL CONFORM TO ANSI/CSA/IAS LC-1.
3.	INSTALL IN ACCORDANCE WITH MANUFACTURER'S RECOMMENDATIONS AND IN COMPLIANCE WITH LOCAL CODES.
4.	ASTM E84 FIRE RESISTANCE: FLAME SPREAD RATING SHALL NOT EXCEED 25, SMOKE DENSITY RATING SHALL NOT EXCEED 50.
5.	TEST PRESSURE SHALL BE IN ACCORDANCE WITH NFPA 54.
6.	UNDERGROUND INSTALLATION SHALL CONFORM TO LOCAL CODES AND NFPA 54, INTERNATIONAL FUEL GAS CODE, UNIFORM PLUMBING CODE, AND MANUFACTURER'S RECOMMENDATIONS.
7.	FITTINGS AND COUPLINGS SHALL NOT BE USED BELOW SLABS OR BUILDINGS.
8.	PIPING SHALL BE BONDED IN ACCORDANCE WITH NFPA 54, NFPA 70, MANUFACTURER'S RECOMMENDATION, AND LOCAL CODES.
9.	TUBING AND FITTINGS SHALL BE OF THE SAME MANUFACTURER.
10.	PROVIDE MANUFACTURER'S STANDARD PIPING MANIFOLD WHERE NOTED ON DRAWINGS.
11.	APPLY CSA APPROVED STRIKER PLATES IN PUNCTURE THREAT AREAS.
12.	OVERPRESSURE PROTECTION SHALL BE IN ACCORDANCE WITH LOCAL CODES AND NFPA 54.

						5 PSIG AT 150°F
						CSST w/ PE Jacket
						NO.
0	REVISION 0	6-Oct-09	AJU	MNM	MAE	**ASS3**
NO.	REVISION	DATE	DESIGN	CHECK	APVD	

PART 1 GENERAL

1.01 SECTION INCLUDES

A. Pipe materials.

B. Fittings, unions, flanges, and couplings.

C. Welding fittings.

D. Piping identification.

E. Pipe coating and wrapping.

F. Tie rods.

G. Pipe joining methods.

H. Cleaning and protection.

I. Leakage tests.

J. Thrust restraints.

K. Piping schedules.

1.02 DEFINITIONS

A. Pipe Class Specifications define pipe materials, dimensional standards, and wall thickness. Also defined are other components of piping system, including fittings, joints, flanges, and connection methods as applicable. Maximum allowable working pressure and associated temperature are provided for reference. Some Pipe Class Specifications also include notes and comments that provide additional direction on use, limitations, and installation of piping system.

1.03 INFORMATIONAL SUBMITTALS

A. Quality assurance data:
   1. Certificates of compliance with standards specified for pipe, fittings, accessories, and specialties.
   2. Welding procedure specifications and welding operator performance qualifications in accordance with ASME “Boiler and Pressure Vessel Code”, Section IX, upon request.

1.04 QUALITY ASSURANCE

A. Regulatory requirements:
   1. Piping construction criteria shall conform to requirements of ASME B31 as applicable. Work shall also comply with applicable state and local codes.
   2. Piping connected to pressure parts under jurisdiction of ASME "Boiler and Pressure Vessel Code": In accordance with ASME "Boiler and Pressure Vessel Code" and state and local codes.
   3. Piping not covered by ASME "Boiler and Pressure Vessel Code": In accordance with ASME B31 "Code for Pressure Piping” and state and local codes.
   4. Comply with applicable requirements of state and local plumbing codes including but not limited to NSF 61 requirements for potable water piping and fittings.

B. Certifications: New materials and equipment shall bear manufacturer's name, model number, or other identification marking.

C. Pipe spools shall contain piece identification mark on each end of spool.

D. Piping material shall be new. Materials showing signs of scaling or rust will be rejected.

E. Welding requirements:
   1. Qualification of welding procedures to be used and welding operators shall be in accordance with ASME “Boiler and Pressure Vessel Code,” Section IX.
   2. Welding materials and procedures for piping shall conform to ASME B31 and applicable state and local regulations.
   3. Employ certified welders in accordance with ASME “Boiler and Pressure Vessel Code,” Section IX, and AWS D1.1.
   4. Welding inspection personnel shall be qualified in accordance with AWS QC1.
   5. Maintain records in accordance with requirements of ASME B31.

1.05 DELIVERY, STORAGE, AND HANDLING

A. Weld end larger than 2” (50 mm): Fit pipe with protective end caps. Seal with waterproof tape.

B. Female opening 2” (50 mm) and smaller: Install plastic insert and seal with waterproof tape.

C. Nonflanged nipples 2” (50 mm) and smaller: Fit pipe with plastic cap and seal with waterproof tape.

D. Flanged opening: Bolt 1/2” (13 mm) waterproof disk with 1/8” (3 mm) rubber gasket. Use at least half available holes.

PART 2 PRODUCTS

2.01 DESIGN REQUIREMENTS

A. Pipe, fittings, valves, and accessory material shown on Drawings and as necessary for complete piping system with connections to equipment. Provide drains required to drain low points in piping and vents required to vent high points in piping. Provide piping for testing, startup, cleaning, and operation of system.

B. Provide pipe, fittings, valves, and accessory material necessary for following piping not shown on Drawings:
   1. Vents and drains for equipment to which piping connections are made or which are installed under this Contract. Provide piping to drains from equipment including, but not limited to, level alarms, meter bodies, transmitters, steam trap blow connections.
   2. Piping, not shown on Drawings, but required for proper operation of piping system and equipment, including drain valves required to drain all low points in piping and vent valves required to vent all high points in piping for testing, start-up, and operation.
   3. Metering instruments and regulating apparatus, including pressure gages, thermometers, controllers, traps, and other appurtenances as required for satisfactory operation of piping system and proper functioning of such instruments and controls.
   4. Flanges, unions, bolting material, gaskets, reducing fittings, bushings, and adapters required to connect piping to equipment, valves, in line specialties, etc.
   5. Temporary piping and accessories required for placing equipment and piping into initial service including, but not limited to, cleaning and hydrostatic testing. Arrangement of piping and supports shall be submitted to Owner for review.
   6. Blind flanges, caps, or plugs of appropriate class to close unused openings in equipment or piping provided by others.
   7. Flanges as required for connection to equipment by others.

C. Piping arrangement: Fire protection, plumbing and HVAC piping are generally schematically routed. Contractor shall vary location of piping and ducts to suit actual conditions, provide for access and clearances, and provide for thermal expansion. Field-fabricate and erect to provide workable arrangement with convenient access to valves and specialty items. Piping arrangement shall allow for thermal expansion and clearance after insulation is installed.
   1. Route piping parallel to building lines, except for slope.

2. Protection of electrical equipment: Avoid locating pipe, joints, specialties, valves, etc. over electrical equipment to meet requirements of Article 110 of NEC. Provide drip pans over electrical equipment as approved by Owner where routing of piping over electrical equipment is unavoidable.
3. For equipment, valves, etc. with connections less than line size, locate reducers at equipment or valves to minimize length of reduced diameter piping.
4. Contractor shall note on record drawings modifications made to piping systems.

D. Provide pipe, fittings, accessories, and appurtenances required by each Pipe Class Specification.

E. Maintain a minimum of 3” (75 mm) clearance between pipes. For insulated piping, clearance shall be from outside surface of insulation.

2.02 PIPE MATERIALS

A. Pipe materials, pressure class, schedule, and type of joints shall conform to Pipe Class Specifications referenced in Pipe Schedule.

B. If pipe wall thickness specified is not available, use next heavier wall thickness.

C. Comply with ASME B31 and, where applicable, ASME “Boiler and Pressure Vessel Code.”

2.03 FITTINGS - GENERAL

A. Material, wall thickness, and pressure class: As specified in article "Pipe Materials," unless otherwise noted.

B. Use long radius fittings, except where noted on Drawings to use short radius fittings.

C. Provide dielectric unions or flanges at connections between ferrous and nonferrous piping or equipment.

D. For soil and waste piping, use 45° Y fittings and long sweep quarter, eighth or sixteenth bends.

2.04 UNIONS, FLANGES, AND COUPLINGS

A. Pressure class, material, and facing: As specified in article "Pipe Materials."

B. Where union, flanges, and couplings are not specified in Pipe Class Specification, provide as follows:
1. Pipe size 2" (50 mm) and smaller: Malleable iron unions for threaded ferrous piping; cast bronze or wrought copper unions for copper piping with soldered or brazed joints. For nonmetallic piping provide unions of same material as pipe.
2. Pipe size 2-1/2" (64 mm) and larger: Forged steel weld neck or slip-on flanges for ferrous piping; bronze flanges for copper piping. For non-metallic piping, provide flanges of same material as pipe. Provide 1/8" (3 mm) thick preformed synthetic fiber gaskets, Garlock "Blue-Gard 3000," or equal.
3. Grooved end pipe: Malleable iron housing clamps to engage and secure grooved pipe ends, designed to permit angular deflection, contraction, and expansion; C-shape composition sealing gasket, steel bolts, nuts, and washers; use galvanized couplings for galvanized pipe.

2.05 WELDING FITTINGS

A. Material and wall thickness: As specified in article "Pipe Materials."

B. Use welding tees for socket-welded piping and for field-fabricated branch tees in butt-welded piping.

C. Nozzle-welded branches or "Weldolets" and "Threadolets" will be permitted instead of butt welding tees for shop-fabricated steel piping provided that such nozzles are fabricated in accordance with ASME B31. Use tees for branches in non-steel piping.

D. Mitering of pipe to form elbows, notching straight pipe to form tees, and similar construction will not be acceptable for pressure piping except where specifically permitted in Pipe Class Specifications.

2.06 PIPE SLEEVES

A. Provide sleeves for piping passing through building structure, except where otherwise shown on Drawings.

B. Through footings: Service weight cast iron.

C. Other locations below grade: Cast iron or standard weight wrought iron pipe.

D. Above grade: Steel pipe, sheet steel not lighter than 16 U.S. Standard Gauge, or fiberglass with 1/4" (6 mm) minimum wall thickness; or thermoplastic construction, Pipeline Seal and Insulator, Inc. Link-Seal "Century-Line," or equal.

E. Size:
1. Foundations and footings: 4" (100 mm) larger than carrier pipe plus insulation where piping system is to be insulated.
2. Walls and floors: 2" (50 mm) larger than carrier pipe plus insulation where piping system is to be insulated.
3. Floors: Extend 4" (100 mm) above floor.

2.07 PIPE SLEEVE SEALS

A. Type: General purpose.

B. Construction:
1. Pressure plate: Reinforced nylon polymer.
2. Bolts and nuts: Galvanized steel.
3. Sealing element: EPDM.

C. Temperature limits: -40°F to 250°F.

D. Manufacturer: Pipeline Seal and Insulator/Thunderline “Link-Seal” Model C.

2.08 PIPE MARKERS

A. Type: Snap-on with arrows.
1. Lettering:
a. Size: Use 1-1/4" high letters for pipes with outer covering 2-1/2" diameter or larger; use 3/4" high letters for pipes with outer covering smaller than 2-1/2".
b. Lettering subject to review.
2. Banding:
a. Snap on or nylon wire ties.
b. Color code: To be furnished after award to Contract (in accordance with Owner's system).
3. Manufacturer: Seton “Setmark,” or equal.

B. Type: Self-sticking markers indicating contents of pipe.
1. Lettering:
a. Size: Use 1-1/4" high letters for pipes with outer covering 2-1/2" diameter or larger; use 3/4" high letters for pipes with outer covering smaller than 2-1/2".
b. Lettering subject to review.
2. Banding:

a. Type: Self-sticking tape, 2" wide; with direction flow arrows.
b. Color codeTo be furnished after award to Contract (in accordance with Owner's system)

3. Manufacturer: Craftmark “Duramark System,” or equal.

PART 3 EXECUTION

3.01 INSTALLATION - GENERAL

A. Install piping as shown on Drawings, as specified, and in accordance with manufacturer’s recommendations. Hot and cold potable water piping and sanitary and storm drainage systems shall comply with state and local plumbing codes.

B. Modify pipe routing as required to clear building structure, openings, lights, ducts, and work of other trades.

C. Route piping parallel to building lines except for slope.

D. Provide sufficient unions and flanges to permit removal of equipment.

E. Spacing of piping shall be adequate to permit servicing valves and specialties and replacing sections of pipe.

F. Install piping above suspended ceiling areas to allow for suspended ceiling panel removal.

G. Slope pipe to permit complete draining. Install drain valves at low points.

H. Provide nuts, bolts, gaskets, and washers for complete and proper installation.

I. Warning tape shall be installed over each underground pipe. For underground non-metallic pipes, provide trace wire.

3.02 PROVISIONS FOR PIPE EXPANSION

A. Provide bends, offsets, or loops in piping not detailed on Drawings as required to permit pipe expansion due to temperature change and equipment movement.

B. Provide sufficient flexibility in copper piping to eliminate stress transmission to fixtures.

C. See Section 20 05 29 for additional pipe expansion and support requirements.

3.03 PIPE JOINING METHODS

A. Comply with Pipe Class Specifications listed under article "Pipe Materials" and with requirements of ASME B31, unless otherwise indicated.

B. Threaded joints:
1. Clean-cut threads, ream pipe ends, and remove burrs.
2. Apply suitable lubricating, noncorrosive, flexible pipe joint compound to male threads only.

C. Flanged joints:
1. Clean mating surfaces of flanges.
2. Install gasket and tighten bolts evenly.

D. Solder joints:
1. Cut tube square, ream end, and remove burrs.
2. Clean tube end and fitting socket to bright metal.
3. Apply flux to both surfaces, preheat, and feed solder until joint space is filled.
4. Wipe off excess solder, leaving small fillet, remove excess flux.

E. Press mechanical joints:
   1. Press mechanical connections shall be made in accordance with manufacturer's recommendations.
   2. Cut tube square, ram end, and remove burrs.
   3. Tubing shall be fully inserted into fitting and marked at shoulder.
   4. Fitting alignment shall be checked against mark to ensure tubing is fully inserted into fittings.
   5. Joints shall be pressed using tool approved by manufacturer.

F. Weld joints:
   1. Cut pipe square and prepare pipe ends for welding as required by ASME B31.
   2. Workmanship shall conform to details and requirements of ASME B31.

G. Brazed joints:
   1. Cut tube square and prepare for brazing as required by ASME B31.
   2. Workmanship shall conform to details and requirements of ASME B31.
   3. Qualifications of brazing procedures and brazing operators shall be in accordance with ASME "Boiler and Pressure Vessel Code," Section IX, Part C.

H. Mechanical grooved joints:
   1. Pipe grooving shall be in accordance with manufacturer's recommendations.
   2. Ream each piece of pipe prior to erection. Inspect each piece of pipe and fittings before installing.
   3. Coat pipe ends with lubricant to facilitate installation. Entire coupling installation shall be done in accordance with manufacturer's recommendations.

I. Bell, leaded, and plain-end joints:
   1. Gasketed joints: Lubricate ends, install gasket, and use winch or jack to pull pipe together.
   2. Calk joint:
      a. Calk with oakum to 1" (25 mm) from end of bell.
      b. Fill with 1 continuous pour of lead, 1" (25 mm) minimum depth.
      c. Calk sufficiently to form a tight seal.

J. Cast iron soil pipe to clay tile:
   1. Cast iron pipe shall enter bell of clay tile or fitting.
   2. Wrap joint with 4" (100 mm) wide strip of asphalt-impregnated or fiberglass cloth.
   3. Cast joint in block of concrete 24" (600 mm) long and 6" (150 mm) minimum cover; reinforce with wire mesh in concrete completely around joint.

K. Ductile iron bell and spigot to carbon steel:
   1. Roll ASTM A36 steel plate and weld to carbon steel pipe.
   2. Plate thickness shall be as necessary to have outside diameter of steel pipe match outside diameter of ductile iron pipe.
   3. Weld locking ring to steel pipe.
   4. Contractor, at its option, may use oversized gaskets and weld only locking ring to steel pipe.

L. Threaded pipe to cast iron pipe: Spigot connector.

M. Other joints and joining methods: In accordance with Pipe Schedule and Pipe Class Specifications.

3.04 LEAKAGE TESTS

A. Notify Engineer and Owner of intent to test piping at least 1 week prior to test. Test in presence of Engineer and Owner, unless notified otherwise.

B. Refrigeration piping:
   1. Joints and connections shall be examined for apparent faults before testing.
   2. Test at not less than lower of design pressure or setting of pressure relief device protecting system.

3. Test medium shall be nitrogen gas or refrigerant of type to be used in equipment. Use halide leak detector to locate small leaks.

C. Vents and gravity drainage piping: Test in accordance with local plumbing code.

D. Other piping: Test hydrostatically in accordance with ASME B31.

E. Provide pumps, compressors, meters, gages, piping, fittings, accessories, and labor required to conduct tests.

F. Isolate equipment that may be damaged by test pressure.

G. Refit joints indicating leakage and replace defective pipe, fittings, and accessories.

3.05 CLEANING AND PROTECTION

A. Remove foreign material from pipes before erection.

B. Close ends of partially erected systems.

C. Remove temporary preservative coatings from valves and accessories.

D. Flush or otherwise clean systems after erection.

E. Prior to conducting final performance test, Contractor shall verify that strainers are clean.

F. Contractor shall be responsible for malfunctioning of pumps, valves, controls, or other equipment due to presence of foreign material. Clean, repair or replace malfunctioning equipment at no cost to Owner.

G. Disinfect potable water piping as required by health authority having jurisdiction.

H. Thoroughly flush lines after disinfection until extremities indicate same chlorine residual as supply water.

3.06 PIPE IDENTIFICATION

A. Provide pipe markers on new piping exposed in equipment rooms, accessible pipe shafts, unfinished basement areas, unfinished storage rooms, janitor's closets, tunnels, and other areas where directed.

B. Install markers on both horizontal and vertical section of pipe at points where pipes pass through walls, floor, or ceiling, and at each valve. In tunnels, markers shall be no greater than 20' (6 m) apart, or 1 marker minimum for sections less than 20' (6 m).

3.07 PIPE SCHEDULE

Service	Pipe Description	Piping Class Specification (1)	Design Temp. (°F)	Operating Temp. (°F)	Design Pressure (psig)	Operating Pressure (psig)	Test Pressure (psig)	Testing Method (2)
Compressed Air			---	---	150	100	---	Initial service testing
	ASTM A53 Gr. B Steel	ACS6						
Potable Water:			60	45	125	60	188	Hydrostatic
2” and smaller								
	ASTM B88 Hard-Drawn Copper	ACU1						

Service	Pipe Description	Piping Class Specification [1]	Design Temp. (°F)	Operating Temp. (°F)	Design Pressure (psig)	Operating Pressure (psig)	Test Pressure (psig)	Testing Method [2]
	ASTM F876 PEX	APE5						
4" and larger								
	ASTM B88 Hard Drawn Copper	ACU1						
	AWWA C151/A21.51 Cement-lined Ductile Iron	ADI1						
Heating Water:			180	150	125	75	188	Hydrostatic
	ASTM A53 Gr. B Steel	ACS6						
Natural Gas and Propane								
	ASTM A53 Gr. B Steel	ACS6						
	ASTM A240/ANSI LC1 Corrugated Stainless Steel tubing	ASS3						

Notes:
[1] Where multiple Pipe Class Specifications are specified, selection of material is at Contractor's option.
[2] Testing in accordance with ASME B31 unless noted otherwise.

END OF SECTION

1) J. J. Bovenkamp
2)

PART 1 GENERAL

1.01 SECTION INCLUDES

A. Design of pipe support systems, equipment support systems and supplementary support steel.

B. Fabrication and installation of:
   1. Pipe and equipment supports.
   2. Supplementary support steel.

1.02 DEFINITIONS

A. Pipe or equipment support system: Collection of supports used to restrain movement and provide support to an entire piping system or equipment.

B. Pipe or equipment support system design includes, but not limited to the following:
   1. Determination of support locations, types of support, support reactions and displacements of pipe and/or equipment at support locations.
   2. Verification that pipe support system meets requirements of article “Pipe Support System Design.”

C. Pipe or equipment supports: Hangers, guides, rollers, slide supports, springs, anchors, struts, snubbers, or any other devices used to restrain movement or provide support to pipe or equipment.

D. Design categories of pipe supports are defined as follows. Following definitions are in addition to definitions of information and materials defined by MSS SP-58.
   1. Completely engineered supports:
      a. Supports where the specific component size is established by the individual support design.
      b. Details of each support shall be prepared containing all information specified in MSS SP-58, article "Pipe Hanger Assembly Drawings."
   2. Semi-engineered supports:
      a. Supports that are designed from similar support configurations from which a specific manufacturer component size can be established and applied to a group of (or like) supports.
      b. Loading and movement design criteria shall encompass most stringent conditions of group. Bill of Material for each support need not be established.
      c. Supports may be field fabricated from stock materials.
   3. Random supports: Supports which require no engineering and may be field-fabricated from stock materials.
   4. Pre-engineered: Manufacturer’s published pipe support components.

E. Supplementary support steel: All steel necessary to support pipe and equipment in addition to existing structure or new structure. Existing or new structure is typically structural steel, reinforced concrete or concrete masonry units. Hereinafter, existing or new steel is referred to as “existing steel".
   1. Supplementary support steel includes, but is not limited to, the following:
      a. Steel beams, posts, hangers, diagonal braces, plates, cut shapes, epoxy grouted anchor rods, studs and other similar types of construction, as required for support of pipe and equipment.
      b. Localized stiffening of existing steel or supplementary support steel at pipe and equipment support connections.
   2. Supplementary support steel shall include steel extending down to concrete floor slab where supporting pipe or equipment from above is prohibited by Engineer.
   3. Supplementary support steel does not include standard pipe support hardware.

1.03 PIPE AND PIPE SUPPORT DESIGN RESPONSIBILITIES

Design Responsibility Schedule						
Design Temperature	200°F to 375°F			less than 200°F		
Pipe Size	2" diameter and smaller	2.5" to 4" diameter	6" diameter and larger	2" diameter and smaller	2.5" to 8" diameter	10" diameter and larger
Pipe Support System Design	Contractor	Contractor	Contractor	Contractor	Contractor	Contractor
Pipe Support Design Category and Design Responsibility	Random Supports, by Contractor	Semi-engineered Supports, by Contractor	Completely Engineered Supports, by Contractor	Random Supports, by Contractor	Semi-engineered Supports, by Contractor	Completely Engineered Supports, by Contractor
Supplementary Support Steel Design (except as noted below)	Contractor	Contractor	Contractor	Contractor	Contractor	Contractor
Design of Localized Stiffening of Existing and Supplementary Support Steel	Contractor	Contractor	Contractor	Contractor	Contractor	Contractor

1.04 ACTION SUBMITTALS

A. Shop Drawings:
   1. Piping plans and elevations drawings showing pipe support systems designed by Contractor. Drawings shall show pipe support (by use of symbol), support identification number and locations. Pipe support identification numbers shall use same format as that used by Engineer. Submittal required for all pipe supports.
   2. Details for semi-engineered supports. Support details shall show localized stiffening of support steel at support connection, where applicable.
   3. Details for each completely-engineered support containing information specified in MSS SP-58, article "Pipe Hanger Assembly Drawings." Drawings shall show supplementary steel and localized stiffening of support steel at support connection, where applicable

B. Quality assurance data: Published pre-engineered standard pipe support components utilized on project. Include allowable loads.

1.05 QUALITY ASSURANCE

A. Pipe hangers and supports, fabrication, and installation practices shall be in accordance with MSS SP-58.

B. Contractor’s professional engineer’s seal is not required for design of support where published pre-engineered standard supports with published ratings, loads, and movements are used. Pre-engineered standard supports (including all components) shall be certified by Contractor as acceptable for intended use on this project. See article "Pipe Support Design" for certification requirements.

1.06 EXISTING CONDITIONS

A. Drawings of existing structure are available.

B. For existing structures, conduct necessary field measurements to determine or confirm structure dimensions, steel member locations and sizes, as applicable.

PART 2 PRODUCTS

2.01 ACCEPTABLE MANUFACTURERS

A. Anvil International.

B. Bergen Power.

C. Binder.

D. Carpenter & Paterson.

E. Cooper B-Line.

F. Lisega.

G. Piping Technology & Products.

H. Or equal.

2.02 PIPE SUPPORT SYSTEM DESIGN

A. Pipe support system shall result in pipe stress conforming to requirements of ASME B31.1 and B31.9.

B. Where possible, pipe support locations shall be located to prevent individual structural members from being excessively loaded to point that global stiffening of member is required.

C. Pipe support selection and application: Using pipe support spacing shown in International Mechanical Code with following additional requirements:
   1. Additional supports are required at concentrated loads between supports such as flanges, valves, specialties, etc.
   2. Support spacing values shall be reduced by 25% when pipe changes horizontal direction between supports.

D. Provide seismic restraint of piping in accordance with SMACNA Seismic Restraint Manual and International Building Code. Refer to MSS SP-127 for pipe support seismic design, selection, and application.

E. Incorporate seismic limit ties, guides, and stops to resist lateral loads.

F. Locate supports for pipe connected to equipment to limit equipment reactions to allowable reactions specified by equipment manufacturer.

G. Supports for pipe that terminate at existing pipe connections shall accommodate thermal movement and loads imposed by existing pipe.

2.03 PIPE SUPPORT DESIGN

A. Design all supports.

B. Conceptual support details on Drawings do not represent a design and are intended only to convey MSS type of support assumed by Engineer. Modify support conceptual details as necessary to limit support and pipe stresses to allowables.

C. Conform to MSS SP-58.

D. Design supports such that total of pipe global and local stresses shall not exceed allowable stresses specified in ASME B31.1 and B31.9.

E. Design of all welded attachments to pipe per ASME B31.1 and B31.9. Design of welded attachment shall not exceed allowable stresses specified in ASME B31.1 and B31.9. Welded attachment shall be of similar material as pipe.

F. Design to accommodate hydrostatic testing of pipe when applicable.

G. Where pre-engineered standard supports are used, Contractor's design requirements shall include:
   1. Obtaining manufacturer's certification that manufacturer's support design conforms to above referenced standards.
   2. Verification that loads for particular support application(s) do not exceed manufacturer's specified allowable support loads.
   3. Where applicable, verification that pipe movement at support does not exceed manufacturers allowable.

H. Include type, size and length of welds and type, size, and number of bolts required for attachment of pipe support to support structure.

I. Where pipe routing is shown on Drawings, conduct necessary field measurements or analysis of Drawings if field measurements are not feasible as required to verify clearance and constructability of supports prior to support design and fabrication. Cost for redesign of supports and field modifications of new construction due to lack of field measurements or analysis of Drawings shall be borne by Contractor.

J. Supports inducing torsion in existing structural members are not permitted except where shown on Drawings.

K. Where supports connect to structural steel members and cause localized bending of member flanges or webs, stiffen member as necessary to limit localized bending stress to less than 3 ksi. Design of stiffeners and welds shall be by Contractor.

2.04 EQUIPMENT SUPPORT DESIGN

A. Design equipment support system, supports, and associated supplementary support steel.

B. Base equipment support design upon following parameters:
   1. Support loads.
   2. Equipment movements at supports.
   3. Equipment manufacturer's requirements.

C. Equipment support selection and application: MSS SP-58.

D. Equipment support design: MSS SP-58.

E. Where equipment supports are designed by entity other than equipment supplier, obtain equipment supplier's approval of support system.

2.05 PIPE AND EQUIPMENT SUPPORTS

A. Materials and manufacture: MSS SP-58 and ASME B31.1 and B31.9.

B. Supports and accessory items shall have manufacturer's standard shop-applied primer and standard finish coat, unless specified otherwise. All supports shall be stainless steel.

C. Provide insulation protection shields of sufficient size and gage to prevent crushing of insulation at supports.

D. Supports for pipe designed to receive anti-sweat insulation shall be sized to allow vapor barrier and insulation to be continuous through support. Provide insulation saddles sized to prevent insulation damage at each support.

E. Beam clamps:
1. For pipe sizes 6” and less, and/or piping loads under 600 lbs: Acceptable.
2. For pipe sizes 8” and larger, and/or piping loads greater than 600 lbs: Subject to approval of Engineer.

F. Neither chains nor straps shall be used as permanent pipe supports.

G. Pipe support component in contact with pipe shall be compatible with pipe material so that neither have a deteriorating action on each other. For piping under 150°F (66°C) a neoprene liner may be used to isolate piping from clamp-on pipe support component.

H. Stainless steel pipe in contact with carbon steel pipe support component shall be wrapped with a neoprene liner to prevent dielectric corrosion.

2.06 SUPPLEMENTARY SUPPORT STEEL

A. Shapes: ASTM A6.

B. Material: ASTM A36 or A572, Grade 50, galvanized.

C. Design of supplementary support steel shall be in accordance with AISC "Specification for Structural Steel Buildings - Allowable Stress Design".

D. Supplementary support steel that induces torsion in support member is not permitted.

E. Design supplementary support steel as necessary to prevent excessive loads on pipe support inserts within concrete structure. Expansion anchors in concrete roof structure not permitted without written approval of engineer.

F. Design supplementary support steel as necessary to prevent excessive loads in existing steel members due to pipe support loads. Supplementary support steel is subject to review by Owner.

G. Furnish supplementary support steel with loose clip angles for attachment to structure. Bolt connections to existing columns or other existing steel insofar as practicable. Where connections are common connections with existing steel, new bolts, washers, and nuts shall be supplied under this contract.

H. Supplementary support steel shall conform to requirements of Section 05 50 00.

I. Welding to beam flanges permitted only where welds are parallel to and directly opposite webs. Submit other welding details to Owner for review.

J. Welding: AWS D1.1.

PART 3 EXECUTION

3.01 PIPING SUPPORTS

A. Fabrication and installation: MSS SP-58.

B. Pipe supports for piping systems requiring continuous vapor barriers:
   1. Refer to Section 20 07 00 for list of systems with continuous vapor barrier requirements.
   2. Use factory assembled, pre-insulated supports when available.
   3. Refer to article “Pipe and Equipment Support” for pipe designed with anti-sweat insulation.

END OF SECTION

1) J. J. Bovenkamp
2)

PART 1 GENERAL

1.01 SECTION INCLUDES

A. Insulating and jacketing, including, but not limited to:
1. Air ducts not supplied with factory- or shop-applied liner.
2. Piping systems.
3. Equipment insulation not otherwise insulated by equipment manufacturer.

1.02 ACTION SUBMITTALS

A. Product Data:
1. Schedule for insulating materials, including adhesives, fastening methods, fitting materials, etc. and intended use.
2. Catalog sheets indicating conformance to ASTM Standards, density, thermal characteristics, jacket, surface burning characteristics, water vapor permeability.
3. Submit manufacturers published literature indicating proper installation procedures.
4. MSDS and additional safety procedures required for installation.
5. Provide warranty information on materials
6. Provide VOC content information for all adhesive and sealants to be applied inside building.

1.03 QUALITY ASSURANCE

A. Regulatory requirements:
1. Insulation shall meet requirements of ASHRAE 90.1.
2. Products shall conform to NFPA 90A and 90B with special regard to fire hazard classification requirements of NFPA 255, including vapor barriers and adhesives.
3. Products shall possess flame spread rating of not over 25 without evidence of continued progressive combustion and a smoke developed rating no higher than 50 except as allowed by International Mechanical Code.
4. Insulation materials used in contact with austenitic stainless steel shall meet requirements of ASTM C795.
5. Materials shall be asbestos-free, fire-retardant, moisture-resistant, mildew-resistant and vermin proof.
6. Adhesives, sealants, mastics and other coatings: Compatible to mechanical surfaces, insulations, and jackets to which applied in both wet and dry state. Suitable for temperature of systems to which applied.

1.04 DELIVERY, STORAGE, AND HANDLING

A. Deliver material to job site in original unbroken factory packaging, labeled with manufacturer's density and thickness.

B. Store insulation materials in clean dry indoor or covered location without direct contact with ground. Do not open packaging until ready to install insulation and close packaging when packaging is not empty. Handle insulation materials so as not to damage and dispose of packaging in accordance with site requirements. Insulation removed from packaging shall not be left uninstalled and exposed to elements.

C. Protect insulation during storage and in erected state from damage. Remove and replace all damaged insulation and jacketing.

1.05 PROJECT CONDITIONS

A. Environmental requirements: Perform Work at ambient and equipment temperatures as recommended by adhesive manufacturer.

PART 2 PRODUCTS

2.01 PIPE INSULATION SYSTEMS

A. Mineral fiber:
1. Insulation:
a. Type: ASTM C547, Type I.
b. Temperature rating: -20 to 850°F (-29ºC to 454ºC).
c. Density: 3 to 6 lb/cu ft.
d. Conductivity: Not more than 0.24 Btu-in/hr-sq ft-ºF at mean temperature of 75ºF (24ºC).
2. All-service vapor retarder jacket (ASJ) with self-sealing lap:
a. Factory applied to insulation.
b. Finish: White vinyl or white Kraft suitable for painting.
c. Bench puncture resistance: 50 units minimum, test method ASTM D781.
d. Permeance: 0.02 perms, maximum, test method ASTM E96, Proc. A.
e. Jacket temperature rating: -20 to 150°F (-29ºC to 65.5ºC).
3. Accessories: Adhesives, sealants, mastics and other coatings compatible with insulation system as recommended by insulation manufacturer.

B. Elastomeric:
1. Insulation:
a. Type: ASTM C534, Type I, Grade 1.
b. Size: Up to 1” (25 mm) thick.
c. Temperature rating: -40 to 180°F (-40ºC to 82ºC).
d. Flame spread rating: No more than 25 tested by ASTM E84.
e. Smoke developed rating: No more than 50 tested by ASTM E84.
f. Conductivity: Not more than 0.28 Btu-in/hr-sq ft-ºF at mean temperature of 75ºF (24ºC).
g. Permeance: Not more than 0.10 perms per inch, test method ASTM E96, Proc. A.
h. Water absorption by volume: Not more than 0.20%.
2. Accessories: Adhesives and sealants compatible with insulation system as recommended by insulation manufacturer.

C. Cellular glass:
1. Insulation:
a. Type: ASTM C552, Type II.
b. Temperature rating: -400ºF to 800°F (205ºC to 427ºC).
c. Density: 6.1 to 8.6 lb/cu ft.
d. Conductivity: ASTM C552.
e. Permeance: 0.00 perms, maximum, test method ASTM E96, Proc. A.
2. Accessories: Adhesives, sealants, mastics or coatings as recommended by insulation manufacturer.

2.02 DUCT AND EQUIPMENT INSULATION SYSTEMS

A. Mineral fiber board:
1. Insulation:
a. Type: ASTM C612.
b. Density: 3.0 lb/cu ft.
c. Temperature rating: 0ºF to 450°F (-17ºC to 232ºC).
d. Conductivity: Not more than 0.24 Btu-in/hr-sq ft-ºF at mean temperature of 75ºF (24ºC).
2. All-service vapor retarder jacket (ASJ):
a. Factory applied to insulation.
b. Finish: White vinyl or white Kraft suitable for painting.
c. Bench puncture resistance: 50 units minimum, test method ASTM D781.
d. Permeance: 0.02 perms, maximum, test method ASTM E96, Proc. A.
e. Jacket temperature rating: -20ºF to 150ºF (-29ºC to 65.5ºC).
f. Joints and seams: 6" (150 mm) wide glass cloth, 2 coats mastic.
3. Reinforced aluminum foil jacket (FRK):

a. Factory applied to insulation.
b. Finish: foil.
c. Bench puncture resistance: 25 units minimum, test method ASTM D781.
d. Permeance: 0.02 perms, maximum, test method ASTM E96, Proc. A.
e. Jacket temperature rating: -20 to 150°F (-29ºC to 65.5ºC).
f. Joints and Seams: 3” (75 mm) wide tape.

4. Accessories: Adhesives and sealants compatible with insulation system as recommended by insulation manufacturer.

2.03 FIELD APPLIED JACKETS

A. PVC jacket:
1. Material: ASTM D1784, Cell Class 16354.
2. Minimum thickness: 0.030” (0.76 mm).
3. Color: Integral color to match system color provided by Owner.
4. Use preformed fittings for sizes available from manufacturer. Other fittings may be mitered.
5. Use pre-curled jackets for available sizes.
6. Ultraviolet rating: Rated for outdoor use in high-UV applications and indoor applications.
7. Solvent weld adhesives: As recommended by PVC jacket manufacturer.
8. Tape: 5 mils minimum. As recommended by PVC jacket manufacturer.
9. Tacks: Stainless steel.

B. Aluminum jacket:
1. Material: ASTM C1729, Type I, 0.016" (0.4 mm) thick, smooth finish, Type 3105 or 3003 aluminum.
2. Jacket cut to size with 2" (50 mm) overlap. Banded 12" (300 mm) oc; seam calked with aluminum color silicon sealant.
3. Banding with insulation less than 13” (330 mm) diameter: Type 304 stainless steel, 1/2" x 0.020" (13 mm x 0.5 mm).
4. Banding with insulation larger than 13” (330 mm) diameter, but less than 6’-0” (1.8 m) diameter: Type 304 stainless steel, 3/4" x 0.020" (19 mm x 0.5 mm)

PART 3 EXECUTION

3.01 PREPARATION

A. Do not install covering before piping and equipment has been tested.

B. Verify surface is clean and dry prior to installation. Verify insulation is dry before and during application. Finish with systems at operating conditions.

3.02 INSTALLATION - GENERAL

A. Verify insulation is continuous through walls. Pack around pipes and fireproof self-supporting insulation material, fully seal.

B. Insulate fittings, in-line specialties, and valves. Do not insulate unions, flanges necessary for maintenance of equipment, strainers, flexible connections, and expansion joints. Terminate insulation neatly with plastic material troweled on bevel.

C. Finish insulation neatly at hangers, supports, and other protrusions.

D. Locate insulation or cover seams in least visible locations.

E. Install insulating materials with necessary joints and terminations to permit easy access and removal of equipment sections where inspection or frequent service or repair is required, and to allow for expansion.

F. Insulate following systems for complete vapor barrier protection:

1. Cold potable water piping.
2. Externally insulated ductwork.
3. Roof drain piping.

3.03 INSTALLATION - PIPING, VALVE, AND FITTING INSULATION

A. Install materials in accordance with manufacturer's instructions and as specified herein.

B. Apply insulation to piping with bonding adhesive, with butt joints and longitudinal seams closed tightly.

C. Laps on factory-applied jackets shall be 1-1/2" (38 mm) minimum width firmly cemented with lap adhesive, or be pressure sealing type lap.

D. Cover joints with factory furnished tape (2" [50 mm] minimum width) to match jacket, firmly cemented with lap adhesive.

E. Install factory-molded insulation for fittings as indicated for valve insulation.

F. For finishing of insulated pipe fittings, one piece PVC or aluminum fitting covers matching pipe jacket may be used.

G. Taper terminations of pipe insulation ends.

H. Where thermal pipe shields are used at hanger locations, extend insulation thermal shield. Where vapor barrier is required, Contractor shall be responsible for continuity of vapor barrier at thermal shield.

I. Where thermal pipe shields are not used at hangers for piping with vapor barrier, insulation shall be calcium silicate type to eliminate compression. Calcium silicate insulation shall extend for twice length of metal shield.

J. Insulation at anchors, secured directly to pipe surface, shall extend up anchor for distance of 4 times insulation thickness. Assure vapor seal at termination of vapor barrier.

K. Piping and fittings not to be insulated:
   1. Fire protection.
   2. Sanitary waste.
   3. Compressed air.
   4. Natural gas.
   5. Fuel oil.
   6. Vent.

3.04 INSTALLATION - VENTILATION DUCTWORK AND EQUIPMENT

A. Apply duct insulation evenly over duct surface, secured with bonding adhesive applied in transverse strips, 12" (300 mm) oc. Insulation for ductwork over 24" (600 mm) wide and underside and sides of ducts with rigid insulation shall be additionally secured with weld pin or stick clip fasteners not over 18" (450 mm) oc. Where weld pin fasteners are used, they shall be installed without damage to interior galvanized surface. Neatly clip pins back to each fastener.

B. Where vapor barrier jackets are specified, pins shall be jacketed over with matching materials or grouted caps, and sealed vaportight.

C. Cut and miter insulation without factory jacket to suit surface. Voids, seams, and joints shall be built up with insulating cement, finished to smooth surface, and covered with glass fabric applied as specified.

D. For surfaces requiring vapor barrier jackets, apply 2 coats of vapor barrier mastic, after application of insulating cement. Embed layer of glass fiber reinforcing fabric between coats and finish with glass fabric applied as specified.

E. Internally lined ductwork shall not be insulated. Refer to Section 23 31 00.

3.05 PIPE INSULATION SCHEDULE

A. Provide insulation on piping, valves, and piping accessories where required. Minimum insulation thickness shall be in accordance with Mechanical Standard M-1008, unless noted below.

B. Provide field-applied jackets on all piping, valves, and piping accessories where exposed as noted below.

C. Piping insulation application schedule:

Service	Insulation	Field Applied Jacket	Thickness
Potable Hot Water Piping (140ºF)	Mineral Fiber Cellular Glass Elastomeric	PVC	M-1008
Potable Cold Water Piping (45ºF)	Mineral Fiber Cellular Glass Elastomeric	PVC	1/2” (13 mm)
Heating Water Piping (180ºF)	Mineral Fiber Cellular Glass Elastomeric	PVC	M-1008
Roof Drain Piping (20ºF)	Cellular Glass Elastomeric	PVC	1/2” (13 mm)

3.06 DUCT AND EQUIPMENT INSULATION SCHEDULE

Item	Insulation[1]	Jacket Type	Insulation Thickness
Odor Control Ducts exterior to building or outside conditioned space	Mineral Fiber board (ASJ)	Aluminum	3”

[1]Letters in parenthesis indicate factory applied jacket.

END OF SECTION

1) J.J. Bovenkamp
2)

MINIMUM NOMINAL INSULATION THICKNESS (INCHES) (NOTE 2)								
FLUID TEMPERATURE RANGES	**39°F & BELOW**	**40°F TO 60°F**	**61°F TO 104°F**	**105°F TO 140°F**	**141°F TO 200°F**	**201°F TO 250°F**	**251°F TO 350°F**	**351°F TO 400°F**
NOMINAL PIPE SIZE								
LESS THAN 1	0.5	0.5	0.5	0.5	1.0	1.5	1.5	2.5
1 - 1.25	1.0	0.5	0.5	0.5	1.0	1.5	2.5	3.0
1.5 - 3	1.0	1.0	1.0	1.0	1.0	2.0	3.0	3.0
4 - 6	1.0	1.0	1.0	1.0	1.5	2.0	3.0	4.0
8 & LARGER	1.5	1.0	1.0	1.0	1.5	2.0	3.0	4.0

NOTES:

1. INSULATION THICKNESSES ARE BASED ON ANSI/ASHRAE/IESNA STANDARD 90.1.
2. ON OUTDOOR EQUIPMENT AND PIPING, THE INSULATING THICKNESS SHOWN ABOVE SHALL BE INCREASED 0.5".
3. INSULATION THICKNESSES SHOWN ARE MINIMUM THICKNESSES AND DO NOT INCLUDE FINISHING OR SEALING COATS.
4. THE MINIMUM INSULATION THICKNESSES ARE BASED ON INSULATION WITHIN THE FOLLOWING CONDUCTIVITY RANGES.

CONDUCTIVITY MEAN RATING TEMPERATURE	100°F	125°F	150°F	200°F	250°F
CONDUCTIVITY (BTU-IN/HR FT-°F)	0.22 - 0.28	0.25 - 0.29	0.27 - 0.30	0.29 - 0.32	0.32 - 0.34

FOR INSULATION WITH CONDUCTIVITY VALUES OUTSIDE THE GIVEN RANGES, THE MINIMUM INSULATION THICKNESS SHALL BE ADJUSTED BASED ON THE FOLLOWING FORMULA.

$$T = r \cdot \left[\left(1 + \frac{t}{r} \right)^{\frac{K}{k}} - 1 \right]$$

WHERE:

- T = MINIMUM INSULATION THICKNESS IN INCHES.
- r = ACTUAL OUTSIDE PIPE RADIUS IN INCHES
- t = MINIMUM THICKNESS FROM ABOVE TABLE.
- K= CONDUCTIVITY OF ALTERNATE MATERIAL AT MEAN RATING TEMPERATURE INDICATED FOR THE APPLICABLE FLUID TEMPERATURE IN BTU-IN/HR FT-°F
- k = THE UPPER VALUE OF THE CONDUCTIVITY RANGE LISTED IN THE ABOVE TABLE FOR THE APPLICABLE FLUID TEMPERATURE.

REVISIONS	DES	CHK	APP	DATE
3- GENERAL	TJL	JJB	MAE	7/13/2007
2- REV HEADING	JBP	SJS	SJS	10/6/1995
1- REVS & CADD	TRK	SJS	SJS	9/16/1994

Stanley Consultants INC.

MECHANICAL STANDARD

INSULATION

PIPING AND EQUIPMENT

INSULATION THICKNESS

SCALE: NONE

NO. **M-1008**

REV **3**

PART 1 GENERAL

1.01 SECTION INCLUDES

A. Procedures, general.

B. Final reports.

C. Contractor responsibilities.

D. Preparation.

E. Schedule of systems requiring testing, adjusting, and balancing services.

1.02 INFORMATIONAL SUBMITTALS

A. Prior to start of Work, submit name of organization proposed to perform services. Designate managerial responsibilities for coordination of entire testing, adjusting, and balancing.

B. Submit documentation to confirm organization qualifications.

C. Submit 3 preliminary specimen copies of each of report forms proposed for use.

D. Fifteen days prior to Substantial Completion, submit 3 copies of final reports. Submit reports of testing, adjusting, and balancing which is postponed due to seasonal, climatic, occupancy, or other reasons beyond Contractor's control, promptly after execution of those services.

E. Schedule of start-up to Engineer.

F. Contractor shall prepare instrument calibration reports in duplicate for each instrument and control loop. Include instrument calibration data and status of equipment. Note any deficiencies yet to be corrected on instruments that are suitable for operation (e.g.: broken lenses, faulty local indicators on transmitters that can still perform correct output transmission) Contractor shall correct these deficiencies at earliest possible date. Copies shall be submitted for Resident Project Representative's review. Each calibration report shall be signed by Contractor's representative witnessing test.
   1. Electrical systems test reports: Typewritten, listing equipment used, person or persons performing tests, date tested, circuits tested, and results of tests.
   2. Form of final environmental test reports:
      a. Each individual final reporting form must bear signature of person who recorded data and that of testing, adjusting, and balancing supervisor of reporting organization.
      b. When more than 1 certified organization performs testing, adjusting, and balancing services, firm having managerial responsibility shall make submittals.
      c. Identify instruments of types that were used, and last date of calibration of each.
      d. Record and submit all data measured including air flow, liquid flows, pressure drops, motor loads and all other data requested in "Environmental Systems," this Section.

G. At completion of Work, Contractor shall submit to Owner certification that equipment has been commissioned and is in operating condition in accordance with Contract Documents.

H. Final reports:
   1. Organization having managerial responsibility shall make reports.
   2. Each form: Bear signature of recorder, and that of supervisor of reporting organization.
   3. Identify each instrument used and latest date of calibration of each.

1.03 QUALITY ASSURANCE

A. Comply with procedural standards of certifying association under whose standards service will be performed.

B. Notify Engineer 3 days prior to beginning of operations.

C. Accurately record data for each step.

D. Comply with applicable procedures and standards of certification sponsoring association; either:
   1. "National Standards for Field Measurements and Instrumentation, Total Systems Balance, Air Distribution-Hydronics Systems," by AABC, International Standards for Environmental Systems Balance" by TABB, or "Procedural Standards for Testing, Adjusting and Balancing of Environmental Systems," by NEBB.
   2. Perform services under direction of supervisor who is designated and qualified under certification requirements of sponsoring association.
   3. Calibration and maintenance of instruments shall be in accordance with requirements of standards, and calibration histories for each instrument shall be available for examination.
   4. Accuracy of measurements shall comply with requirements of standards.

E. Comply fully with procedural standards of certifying association under whose standards service will be performed.
   1. Execute each step of prescribed testing, adjusting, and balancing procedures without omission.
   2. Accurately record required data.

1.04 JOB CONDITIONS

A. Prior to start of testing, adjusting, and balancing, verify that required "job conditions" are met:
   1. Systems installation is complete and in full operation.
   2. Outside conditions are within reasonable range relative to design conditions.
   3. Special equipment such as computers, laboratory equipment, and electronic equipment are in full operation.

B. Verify that requirements for preparation for testing and balancing have been met for elements of each of systems that require testing.

1.05 COORDINATION

A. Coordinate services with Work of various trades to ensure rapid completion of services.

B. Promptly report to Engineer any deficiencies noted during performance of services.

PART 2 PRODUCTS

2.01 SYSTEM REQUIREMENTS

A. Prepare each system for testing and balancing.

B. Cooperate with testing organization, provide access to equipment and systems. Operate systems at designated times, and under conditions required for proper testing, adjusting, and balancing.

C. Notify testing organization 7 days prior to time system will be ready for testing, adjusting, and balancing.

D. Perform specified services with Contractor's qualified personnel, or employ and pay for qualified organization to perform specified services.

E. Perform testing of control station equipment, balancing of distribution system, and adjustment of terminal devices for HVAC systems of Project.

F. Perform testing of hydronic systems, adjust and record liquid flow at each piece of equipment.

G. Provide instruments required for testing, adjusting, and balancing operations.
   1. Make instruments available to Engineer to facilitate spot checks during testing.
   2. Retain possession of instruments; remove from Site at completion of services.

H. Furnish material, tools, and labor required to perform start-up of each respective item of equipment, instrument and system:

I. Provide information and assistance required, cooperate with test, adjust, and balance services.

J. Comply strictly with specified manufacturer's or Engineer's procedures in starting up specified systems.

2.02 MATERIALS

A. Provide and maintain tools and test equipment in first-class condition and quantities sufficient to assure successful performance and completion of required Work.

B. Furnish and use materials in accordance with these Specifications. Materials shall be of first-class quality, free from defects or imperfections, of recent manufacture, unused and of classification and grade specified.

C. Test equipment shall have recent calibration checks by equipment manufacturer or authorized facility to assure accuracy of commissioning process.

D. Piping system joint leak testing compound: "Leak-Tek," or equal.

E. Anti-rust compound for packing gland threads and valve stems: "Moly-Cote" or "Fel-Pro."

PART 3 EXECUTION

3.01 PREPARATION

A. Provide instruments required for testing, adjusting, and balancing operations. Make instruments available to Engineer to facilitate spot checks during testing. Retain possession of instruments and remove at completion of services.

B. Verify installation of system to be tested is complete and in continuous operation.

C. Verify ambient conditions and related facilities are in full operation.

3.02 MECHANICAL SYSTEMS

A. Bearings:
   1. Inspect for cleanliness; clean and remove foreign materials.
   2. Verify alignment.
   3. Replace defective bearings, and those that run roughly or noisily.
   4. Grease as necessary, and in accordance with manufacturer's recommendations.

B. Drives:
   1. Adjust tension in V-belt drives, and adjust varipitch sheaves and drives for proper equipment speed.
   2. Adjust drives for alignment of sheaves and V-belts.
   3. Clean; remove foreign materials before starting operation.

C. Motors:
   1. Check each motor for amperage comparison to nameplate value.
   2. Correct conditions which produce excessive current flow, and which exist due to equipment malfunction.

D. Piping systems:
   1. Tighten flanges after system has been placed in operation. Replace flange gaskets which show any sign of leakage after tightening.
   2. Inspect screwed joints for leakage.
      a. Promptly remake each joint that appears to be faulty; do not wait for rust to form.
      b. Clean threads on both parts, apply compound, and remake joints.
   3. After system has been placed in operation, clean strainers, dirt pockets, orifices, valves seats, and headers in fluid systems, to assure they are free of foreign materials.
   4. Open air vents; remove operating elements. Clean thoroughly, replace internal parts and put back into operation.
   5. Remove any rust, scale, and foreign materials from equipment and renew defaced surfaces.
   6. Repair damaged insulation.
   7. Vent gasses trapped in any part of systems.
   8. Check piping for leaks at every joint, and at every screwed, flanged, or welded connection.
   9. Control valves:
      a. Inspect both hand and automatic control valves; clean bonnets and stems.
      b. Tighten packing glands to ensure no leakage, but permit valve stems to operate without galling.
      c. Replace packing in valves to retain maximum adjustment after system is judged complete.
      d. Replace packing on any valve that continues to leak.
      e. Remove and repair bonnets that leak.
      f. Coat packing gland threads and valve stems with surface preparation of anti-rust compound after cleaning.

3.03 ENVIRONMENTAL SYSTEMS

A. Perform testing of central station equipment, balancing of distribution systems, and adjusting of terminal devices for:
   1. Air handling units.
   2. Return, supply, and exhaust fans.
   3. Air distribution systems.
   4. Water distribution systems.
   5. Heating terminal units.

B. Air balancing:
   1. Make measurements in accordance with recognized procedures and practices of certifying association.
   2. Measure air volume discharged at each outlet and adjust air outlets to design air volumes within 10% over or under. Adjust fan speeds and motor drives within drive limitations for required air volume. Set speed to provide air volume at farthest distance without excess static pressure.
   3. Measure and adjust air supply and exhaust fan units to deliver design conditions at 100%.
   4. Adjust outside air automatic dampers, outside air, return air, and exhaust dampers for design conditions.
   5. Measure static air pressure conditions on air supply units, including filter and coil pressure drops, and total pressure across fan.
   6. Evaluate building and room pressure conditions to determine adequate supply and return air conditions.
   7. Evaluate space and zone temperature conditions to determine adequate performance of systems to maintain temperatures without draft.
   8. Measure temperature conditions across outside air, return air, and exhaust dampers to check leakage.
   9. Mark balancing dampers and cocks.

C. Hydronic balancing:
   1. Make measurements in accordance with recognized procedures and practices of certifying association.
   2. Measure and adjust water flow for design conditions, within 10% over or under.
   3. Check conditions at heating coils for required performance at design conditions.
   4. Check conditions at primary source equipment for performance of design conditions.

3.04 INSTRUMENTATION SYSTEMS

A. Commission controls and instruments prior to start-up to assure in situ performance in accordance with specifications under simulated operating conditions. Contractor to determine initial start-up conditions.

B. Remove shipping stops from instruments before starting with procedures listed herein. Contractor shall have instruction manuals available, and shall install miscellaneous components such as charts, illumination, mercury, etc., which have been supplied separately but are integral parts of equipment.

C. If any doubt exists as to correct method for calibrating or checking calibration of instrument, manufacturer's printed recommendations shall be used.

D. If any instrument cannot be properly adjusted, it shall be immediately called to attention of Owner and report of its condition confirmed in writing.

E. Instrument check: Verify data on nameplate with respect to conditions of range, operating temperature, specific gravity, and components as stated on unit specifications. Any discrepancies shall be immediately called to attention of Owner and report of condition confirmed in writing.

F. Verify that control valve seats are free from foreign material, and are properly positioned for intended service.

G. Test procedures:
   1. Check handswitches, pushbuttons, and pilot lights.
   2. Check interlocking circuits installed for conformance to schematic diagrams and "Sequence of Operation."
   3. Perform Work of placing in initial operation equipment installed or wired under this contract, following instructions and recommendations of equipment manufacturers.
      a. After energizing and prior to start-up, check control circuits and programs for proper sequence of operation and interlocking functions.
      b. Wiring changes required as result of such checks shall be properly identified by changing terminal strip and/or wiring markers.
   4. Contractor shall provide necessary construction labor to make equipment final adjustments that are required to place systems in good operating condition, and furnish labor to assist in solving instrument or control problems.
   5. Contractor shall calibrate instruments and components in accordance with manufacturer's calibration data over full operational range, prove instruments to be within published specification, accuracy, and affix calibration sticker. Instruments shall be calibrated individually and where applicable, as system Components which have adjustable features shall be carefully set for specific conditions and applications of this Project. Each calibration sticker shall be signed by Contractor's representative witnessing test.
   6. Calibration sticker shall contain the following information: Equipment identification tag number, range of calibration, and date and name of person doing calibration.
   7. Valves and operations:
      a. Control valves: Operation of control valve shall be verified within limits of practicality. Particular attention must be given to manufacturer's instructions and applicable nameplate data in reference to valve spring scale and actuation conditions. Pay close attention to bench set.
      b. Valve action: Check valve action for conformance to specifications (open or closed on ***** power failure).

8. Controllers; field mounted: Simulate "Set Point" and "Measured Variable" signals at controller, with separate regulated signals. Check operation as in Item "8., b." preceding.
9. Acceptable calibration standards:
    a. Vacuum or draft:
        1) 0" to 5" w.c.: Inclined water filled manometer graduated in tenths and inches of water.
        2) 5" to 25" Hg: Mercury manometer graduated in inches of mercury.
        3) 5" to 60" H_20: Water manometer graduated in inches of water.
    b. Pressure:
        1) 0" to 5" w.c.: Inclined water filled manometer graduated in tenths and inches of water.
        2) 5" to 60" w.c.: Water manometer graduated in inches of water.
        3) 3 to 25 psig: Mercury manometer graduated in psi.
        4) 25 to 150 psig: Precision pressure gage, 0-160 psi, 1/4 of 1% accuracy, 8-1/2" dial minimum.
        5) 150 to 750 psig: Precision pressure gage, 0-800 psi, 1/2 of 1% accuracy, 8-1/2" dial minimum.
        6) 750 to 2,750 psig: Precision pressure gage, 0-3,000 psi, 1/2 of 1% accuracy, 8-1/2" dial minimum.
    c. Differential:
        1) 0" to 5" w.c.: Inclined water filled manometer graduated in tenths and inches of water.
        2) 5" to 300" w.c.: Mercury manometer graduated in inches of water.
        3) 5 to 25 psig: Mercury manometer graduated in psi.
        4) Above 25 psig: Use pressure gages listed hereinbefore.
    d. Temperatures:
        1) -20 to 250ºF: Laboratory thermometers of suitable range.
        2) Other ranges: Use thermocouple and precision potentiometer.
    e. Others:
        1) Precision millivolt potentiometer: Portable.
        2) Rotameter: Range, 6.5 to 65 cu cm/min of air.
        3) Equipment as specified by manufacturer's instructions.
        4) Wallace & Tiernan or Mansfield-Green pneumatic calibrator; range, vacuum to +24 psi: For vacuum, pressure, or differential.

END OF SECTION

1) J. J. Bovenkamp
2)

PART 1 GENERAL

1.01 SECTION INCLUDES

A. Metal ducts.

B. Fiberglass reinforced plastic (FRP) ducts.

1.02 DEFINITIONS

A. Duct sizes: Inside clear dimensions. For acoustically lined or internally insulated ducts, maintain scheduled sizes inside lining or insulation.

B. Pressure class:
1. See application table for pressure class requirements for each duct system.
2. Pressure classes shall correspond to pressure classes defined by SMACNA in HVAC Duct Construction Standards Metal and Flexible – Third Edition.
3. Each pressure class shall be suitable for positive or negative pressure applications.

C. Leakage class:
1. See leakage class table for requirements for each duct system.
2. Leakage classes shall correspond to leakage classes defined by SMACNA in HVAC Air Duct Leakage Manual, Second Edition 2012.

1.03 PERFORMANCE REQUIREMENTS

A. Guarantee ductwork to be free of vibration, chatter, objectionable pulsation, and excessive leakage under all conditions of operation.

1.04 INFORMATIONAL SUBMITTALS

A. Shop Drawings: Duct fittings, including particulars such as gage sizes, welds, and configurations.

1.05 QUALITY ASSURANCE

A. Use material, weight, thickness, gage, construction, and installation methods as outlined in following SMACNA publications:
1. SMACNA Duct Construction Standards Metal & Flexible, Third Edition.
2. SMACNA Fibrous Glass Duct Construction Standards, Seventh Edition.

B. Construct and install ductwork in accordance with provisions of International Mechanical Code.

C. Perform leakage test as outlined in SMACNA HVAC Air Duct Leakage Manual Second Edition 2012.

D. Verify field measurements prior to fabrication.

PART 2 PRODUCTS

2.01 MATERIALS

A. Stainless steel sheet metal:
1. Cold-rolled stainless steel sheet capable of welding or double seaming without fracture.
2. Alloy: 304-2B.

B. Sealant:
1. Water-based, water-resistant.
2. Fire-resistive.

3. Compatible with mating materials.
4. Elastomeric mastic
5. Maintain manufacturer's recommended temperatures during and after installation.

2.02 FIBERGLASS REINFORCED PLASTIC (FRP) DUCTWORK

A. Construction: Polyester impregnated, filament wound fiberglass in accordance with ASTM D3982 and C582, with corrosion protection on inner surface and corrosion and UV protection on outer surface.

B. Design: Duct design shall be suitable for use in seismic areas, and for use outdoors. Duct wall thickness shall be calculated for buried duct with minimum structural layer of 3/8" (10 mm).

C. Corrosion resistance: Resistant to hydrogen sulfide, chlorine, and other gases encountered in wastewater treatment plants.

D. Temperature limit: For transportation of air at 180°F (82˚C), continuous service.

E. Thermal conductivity: 3.0 Btu-in/hr-ft2°F (0.433 W/(m-K).

F. Joints: Butt and wrap in accordance with manufacturer's recommendation.

G. Fabricate fittings, joints and other accessories in accordance with SMACNA recommendations for Thermoset FRP Ducts.

H. Manufacturer: Yankee Plastic Company; Spunstrand, Inc. Perry Fiberglass, or equal.

PART 3 EXECUTION

3.01 FABRICATION AND INSTALLATION

A. Fabricate and install duct, fittings, reinforcement, and supports in accordance with SMACNA recommendations except as modified below.
1. Complete metal ducts within themselves with no single partition between ducts. Where width of duct exceeds 18" (450 mm), cross break for rigidity. Open corners are not acceptable.
2. Increase duct sizes gradually, not exceeding 15º divergence wherever possible. Maximum divergence upstream of equipment shall be 30º; convergence downstream of equipment shall be 45°.
3. Provide easements where ductwork conflicts with piping and structure. Where easements exceed 10% of duct area, split into two ducts maintaining original duct area.

B. Ductwork - general:
1. Construct ductwork so interior surfaces are smooth. Use rivets or nuts and bolts for fabricating ductwork. Sheet metal screws may be used on duct hangers, transverse joints, and other SMACNA-approved locations if screw does not extend more than 1/2" (15 mm) into duct. Seal fastener locations where leakage could occur and seal ductwork according to SMACNA recommendations with regard to pressure class of duct.
2. Use elbows, tees, lateral, crosses and accessory fittings as needed to fabricate duct systems.
3. Use elbows and tees with a centerline radius to width or diameter ratio of 1.5 wherever space permits. When shorter radius must be used due to limited space, install sheet metal turning vanes through entire length of fitting. Where space will not allow use of shorter radius elbow or tee, install mitered fitting with double-wall turning vanes. Square throat-radius heel elbows shall not be acceptable.
4. Construct branch take off with 45º take off fitting connection 1-1/2 times area of branch duct.
5. Use splitter dampers and/or extractors only where manual volume dampers will not accomplish intended balancing. Use of splitter dampers and/or extractors shall not eliminate need for specified or indicated manual volume dampers.
6. Lap metal ducts in direction of air flow. Hammer down edges and slips to leave smooth duct interior.

7. Rigidly construct metal ducts with joints mechanically tight, substantially airtight, braced and stiffened so as not to breathe, rattle, vibrate, or sag.
8. Fasten hangers to duct with nuts and bolts or surround duct with hanger strap to provide a single hanging point for round duct. Trapeze hangers may be used. Internal duct hangers not accepted.
9. Provide sufficient clearances between duct and beams, pipes, or other obstructions in building construction and for work of other trades. Check drawings showing work of other trades and consult with Engineer in event of any interference. Transform, divide, or offset ducts as required, in such a manner as to maintain same cross sectional area of duct as indicated on Drawings. Where it is necessary to take pipes or similar obstruction through ducts, ducts need not be enlarged if decrease in area does not exceed 10%. If decrease in area would exceed 10%, enlarge duct to maintain duct area not less than 90%. In all cases, provide a streamlined casement or collar designed in accordance with SMACNA and seal to prevent air leakage.
10. Provide frames constructed of angles or channels for coils, filters, dampers, or other devices installed in duct systems, and make connections to such equipment including equipment furnished by others. Secure frames with felt gaskets, nut, bolts, and washers.
11. Remove dirt and foreign matter from entire duct system and clean diffusers, registers, and grilles before operating fans and/or before balance begins.
12. Install motor-operated dampers and connect to or install equipment furnished by others.
13. At outside air intakes, install duct to pitch to intakes and to drain to outside of building. Solder or calk on airside seams to form watertight joints. Blank off unused portions of louvers with 1-1/2" (40 mm) board insulation with galvanized sheet metal backing on both sides.
14. Seal transverse joints and all seams.
15. Sealant shall be installed as recommended by manufacturer.
16. Use of tape without sealant shall not be acceptable

C. Ductwork 3” (750 Pa) pressure class and greater:
1. Fabricate and install ductwork, fitting, and reinforcement in accordance SMACNA recommendations.
2. Field joints shall be slip type with sealer applied between joints and riveted. Apply 2" (50 mm) band of duct sealer on outside of joint and duct tape.
3. Use of splitter dampers and/or extractors not allowed.
4. Use elbows, tees, lateral, crosses and accessory fittings as needed to fabricate duct systems.
5. Provide positive and negative relief fittings.
6. Seal all joints, seams and wall penetrations.

D. Duct pressure test:
1. Perform pressure test on representative duct sections on Project totaling minimum of 25% of total installed duct area for each pressure class above 3” w.g (750 Pa) and 100% of all duct systems located outdoors. Owner will select specific duct sections for testing.
2. Pressure test ductwork with Contractor-furnished calibrated test apparatus.
3. Pressure test shall test duct system in sub systems as required to isolate equipment (AHU, Terminal unit, coils, etc) from duct system.
4. Conduct test at pressure rating of duct section, record data in a neat manner before allowing duct to be insulated.
5. Leakage rate shall not exceed allowable values for duct pressure class, seal class, and leakage class specified. Where leakage rate exceeds allowable rate from SMACNA HVAC Air Duct Leakage Manual, locate leak sources, repair, and retest. If more than 10% of tested sections exceed allowable leakage rate, test 100% of duct system.
6. Leakage classes shall be as follows:

Duct Pressure Class in. w.g. (Pa)	Leakage Class	
	Rectangular Duct	Round or Flat Oval Duct
0.5 (125)	16	8
1 (250)	16	8
2 (500)	16	8
3 (750)	8	4
4 (1000)	4	2
6 (1500)	4	2
10 (2500)	4	2

7. If air leakage more than specified above is found during pressure testing and/or air balancing, locate and seal source of leakage. Repair any damage to insulation or other construction.

E. Hangers and supports:
   1. Support rigid round, rectangular, and flat oval metal ducts with support systems indicated in "Hangers and Supports" chapter of SMACNA Duct Construction Standards.
   2. Provide supports as required to maintain alignment.
   3. Provide additional supports within 2' (0.6 m) of each elbow and 4' (1.2 m) of each branch intersection.

F. Seismic restraint of ducts: Provide seismic restraint of all ducts in accordance with SMACNA Seismic Restraint Manual (1998 Edition with Addendum 1), and in accordance with local Building Code. Seismic Hazard levels shall D.

G. Sealing requirements:
   1. All Ducts
      a. Minimum of SMACNA Seal Class A
      b. Seal all transverse joints, longitudinal seams and duct wall penetrations.
      c. Sealant shall be installed as recommended by manufacturer
      d. Use of tape without sealant shall not be acceptable.

H. Fiberglass reinforced plastic duct:
   1. Fabricate and install ductwork, fittings and reinforcement in accordance with manufacturer's published instructions and SMACNA recommendations.
   2. Use elbows and tees with a centerline radius to width or diameter ratio of 1.5 wherever space permits. When shorter radius must be used due to limited space, install turning vane through entire length of fitting. Where space will not allow use of shorter radius elbow or tee, install mitered fitting with double-wall turning vanes. Square throat-radius heel elbows not acceptable.
   3. Construct branch take off with 45º take off fitting connection 1-1/2 times area of branch duct.

3.02 APPLICATION

Duct Application	Duct Material	Minimum Pressure Class	Insulation
Belt Filter Press Room Supply Duct	Stainless steel	NA	None
Belt Filter Press Room Odor Control Exhaust Duct	FRP	NA	20 07 00 for duct exterior to building

END OF SECTION

1) J. J. Bovenkamp
2)

PART 1 GENERAL

1.01 SECTION INCLUDES

A. Balancing dampers.

1.02 INFORMATIONAL SUBMITTALS

A. Shop Drawings: Data concerning dimensions, capacities, ratings and appropriate identification.

B. Product Data: Manufacturer's technical product data for each type of ductwork accessory, including dimensions, capacities, and materials of construction; and installation instructions.

1.03 QUALITY ASSURANCE

A. Manufacturer’s qualifications: Manufacturers must have at least 5 years experience manufacturing duct accessories, of required types and sizes and whose products have been satisfactory used in similar service.

B. Regulatory requirements:
1. Fire dampers and Combination Fire/Smoke Dampers: UL-listed and constructed in accordance with UL 555.
2. Combination Fire/Smoke Dampers and Smoke Dampers: UL listed and constructed in accordance with UL 555S
3. Fusible links: UL-listed and constructed in accordance with UL 33.
4. Access doors: UL-listed.
5. Use material, weight, thickness, gage, construction, and installation method as outlined in:
6. SMACNA Duct Construction Standards - Metal & Flexible, Third Edition.
7. NFPA 90A - Standard for Air Conditioning and Ventilating Systems.
8. NFPA 90B - Standard for Installation of Warm Air Heating and Air Conditioning Systems.
9. UL 214 - Test for Flame-Propagation of Fabrics and Films.

PART 2 PRODUCTS

2.01 MANUAL BALANCING DAMPERS

A. Rectangular dampers
1. Single blade dampers:
   a. Suitable for ducts 12” (300 mm) in height and less and 36” (900 mm) in width and less.
   b. Construction:
      1) Frames: Galvanized steel minimum 20-gage (0.9 mm) channel, or minimum 0.081” (2.1 mm) aluminum channel.
      2) Blades: Single thickness, galvanized steel minimum 22-gage (0.8 mm) for 18” (450 mm) wide and less and 20-gage (0.9 mm) over 18” (450 mm) or aluminum minimum thickness of 0.080” (2.032 mm). Blades shall be stiffened as necessary.
      3) Axles: Minimum 3/8” (10 mm) diameter galvanized steel for ducts 18” (450 mm) wide and less, minimum 1/2” (13 mm) diameter galvanized steel for ducts and over 18” (450 mm). Use stainless steel for stainless or aluminum ducts.
      4) Bearings. Oil-impregnated bronze bearings or molded synthetic.
2. Multi-blade dampers: Suitable for all ducts.
   a. Frames: galvanized steel minimum 16-gage (1.5 mm), or minimum thickness of 0.081” (2.1 mm) aluminum channel.
   b. Blades: opposed type, 6” (150 mm) maximum width, galvanized steel minimum 16-gage (1.5 mm), or extruded aluminum minimum thickness of 0.125” (3 mm).
   c. Axles: Minimum 1/2” (13 mm) diameter galvanized or extruded.
   d. Bearings. Oil-impregnated bronze bearings or molded synthetic.
   e. Linkage: Galvanized steel located outside of air stream. For multi-section dampers, provide jackshaft for operation from one side.

B. Round dampers:
   1. Single blade dampers.
   2. Construction:
      a. Frame FRP in accordance with requirements for FRP duct in section 23 31 00.
      b. Blades: Single thickness FRP in accordance with requirements for FRP duct in Section 23 31 00. Blade shall fully encapsulate shaft.
      c. Axles: Minimum 3/8” diameter or square stainless steel bar or pultruded FRP.
      d. Bearings: Molded synthetic.

C. Provide with locking hand quadrant with damper position indicator. Where damper is located 6’-0” or more above finished floor provide chain wheel operator for operation of damper from floor. Where duct is externally insulated provide 2” (50 mm) minimum standoff bracket.

D. Construct dampers over 48" (1.2 m) in width in multiple sections with mullions.

E. Provide end bearings or other seals on dampers located in 3” (750 Pa) pressure class or higher ducts.

PART 3 EXECUTION

3.01 APPLICATION

A. Manual balancing dampers:
   1. Install in branch ducts of supply, return low-pressure ductwork.
   2. Install as far upstream from inlet or outlet as possible.

END OF SECTION

1) J. J. Bovenkamp
2)

PART 1 GENERAL

1.01 SECTION INCLUDES

A. Centrifugal roof exhaust fans.

1.02 INFORMATIONAL SUBMITTALS

A. Product Data:
1. Catalog data showing selection and options.
2. Manufacturer's Installation Instructions.

B. Shop Drawings:
1. Dimension drawings.
2. Fan curves.
3. Sound ratings.
4. Material of construction.
5. Weights.
6. Tag numbers.
7. Vibration isolation.
8. Motor data as specified.

1.03 CLOSEOUT SUBMITTALS

A. Operation and maintenance data.

1.04 QUALITY ASSURANCE

A. Insofar as practicable, provide fans of same manufacturer throughout.

B. Test fans as complete units in accordance with applicable test code of AMCA. Fans shall be certified by AMCA.

C. Conform to AMCA Bulletins regarding construction and testing. Fans shall bear AMCA certified rating seal.

D. Fabrication and installation shall be in accordance with SMACNA and manufacturer's recommendations.

E. Industrial Ventilation, 25th Edition, American Conference of Governmental Industrial Hygienists.

1.05 JOB CONDITIONS

A. Do not operate fans for any purpose, temporary or permanent, until ductwork is cleaned, filters are in place, and bearings are lubricated.

PART 2 PRODUCTS

2.01 MANUFACTURERS

A. Aerovent.

B. Greenheck.

C. Hartzell.

D. Loren Cook.

E. New York Blower.

F. Twin Cities Fan and Blower.

2.02 DESIGN REQUIREMENTS

A. Provide fans with variable pitch V-belt drives for 15 hp and smaller and fixed drives for 20 hp and larger. Provide variable pitch drive for purposes of initial system balancing on 20 hp and larger fans. Provide fixed pitch drives for final system balancing. V-belt drives shall be designed for 150% of motor rating.

B. Fans shall be statically and dynamically balanced and shall operate without objectionable noise or vibration. Variable speed fans shall be statically and dynamically balanced for entire range of speed operation.

C. Where fan drives are exposed, provide guards in accordance with applicable code requirements. Provision shall be made so tachometer may be used to verify fan speed without removing guard assembly.

D. Fan size, fan class, wheel type, inlet type, capacity, arrangement, operating characteristics, and other special requirements shall be as scheduled.

E. Fans shall be Class 1, unless otherwise indicated.

F. Equivalent fan selections shall not increase motor horsepower, increase noise level, increase tip speed by more than 10%, or increase inlet air velocity by more than 20%, from that specified.

G. Explosionproof fans shall have explosionproof motor enclosure and electrical accessories and AMCA Type A spark-resistant fan construction.

2.03 FINISHES

A. Application: All, unless specified or scheduled otherwise.

B. Aluminum components: None.

C. Interior concealed steel components: Galvanized.

D. Exterior or interior exposed to air stream: Polyester powder coat, 1.5 to 3 mils thickness, Loren Cook “Lorenized,” Greenheck “Permatector,” or equal.

E. Heresite:
1. Applications: As scheduled.
2. Type: Heresite VR-504.
3. Thickness: 4 to 6 mils.
4. Provide Heresite UC-5500 UV-resistant coating for outdoor fans.

2.04 POWERED ROOF EXHAUST FANS:

A. Construction:
1. Arrangement: Upblast or down blast, as scheduled.
2. Housing: Heavy-gage spun aluminum.
3. Wheel: Centrifugal, backward inclined aluminum.
4. Explosionproof as scheduled.

B. Drive: As scheduled.

C. Bearings:
   1. Regreasable with fittings extending outside of casing for ease of service.
   2. Heavy-duty, self-aligning, pillow block, ball-bearing type.
   3. L50 rated at not less than 200,000 hours.

D. Accessories:
   1. Unit-mounted disconnect switch.
   2. Roof curbs:
      a. Adapter curb: Provided by equipment manufacturer to match existing roof curb. Field verify dimensions of existing curb.
      b. Minimum 12" (300 mm) from top of curb to finished roof surface.
      c. Insulation: 2" (50 mm) thick minimum on inside of curb.
      d. Curb shall adjust for roof or structure slope. Top of curb shall be level.
   3. Factory-fabricated roof curb.
   4. Hinged base.
   5. Corrosion resistant fiberglass gravity damper.
   6. Aluminum or fiberglass bird screen.
   7. Lifting lugs.
   8. Drive assembly vibration isolators.
   9. Fan speed controller for direct drive units.

E. Manufacturer: Loren Cook ACE, or equal by Greenheck, Hartzel, or Twin Cities Fan and Blower.

PART 3 EXECUTION

3.01 INSTALLATION – GENERAL

A. Install units in accordance with manufacturer's installation instructions.

B. Provide sheaves as necessary for final air balancing.

C. Furnish and install miscellaneous hangers, steel, and supports to adequately support unit. Construct sheet metal transition fittings as required to connect ductwork and equipment in accordance with requirements of Section 23 31 00. Provide flexible connections at fan inlet and outlet.

D. Arrangement of components shall provide easy access to items requiring periodic maintenance, including, but not limited to belts, filters, and grease fittings.

E. Repair marred or scratched surfaces with manufacturer's touch-up paint.

F. Where fan speed controller is provided, mount to fan housing. Use controller for balancing of direct drive fans.

3.02 INSTALLATION – ROOF MOUNTED FANS

A. Mount on factory-fabricated curbs

END OF SECTION

1) J. J. Bovenkamp
2) J. N. Gavin

PART 1 GENERAL

1.01 SECTION INCLUDES

A. General electrical requirements for equipment, services, and installations including, but not limited to:
1. Factory wiring.
2. Low-voltage field wiring.
3. Low-voltage splices and terminations.
4. Electrical enclosures.
5. Outlet boxes
6. Pull boxes and junction boxes.
7. Equipment safety grounding.
8. Fuses and fuse blocks.
9. Electrical meters.
10. Control relays.
11. Control switches.
12. Pushbuttons.
13. Indicating lights.
14. Alarm and trip contacts.
15. Separately mounted combination motor starters.
16. Local separate manual starter.
17. Local separated low-voltage circuit breakers
18. Local separate disconnect switches.
19. Dc motor starters.
20. General purpose distribution transformers.
21. Motor power factor correction capacitors.
22. Plates and covers.
23. Wiring devices,
24. Welding.
25. Welding receptacles.
26. Panelboards.
27. Circuit breakers
28. Shop finish.
29. Rust-inhibiting compounds.
30. Galvanizing.
31. Packaging, identification, and tagging.
32. Equipment nameplates.
33. Hardware.
34. Logic systems factory testing.
35. Examination of Site.
36. Protection of Work.
37. Equipment and material installation.
38. Protective devices settings and coordination.
39. Cable installation.
40. Wiring devices, boxes, and fittings installation.
41. Grounding and bonding.
42. Power factor correction installation.
43. Fireproofing and fire ratings.
44. Startup and testing.
45. Testing and demonstration.
46. Seismic requirements data sheet.

1.02 RELATED REQUIREMENTS

A. Section 02 41 00 –Demolition: Demolition of electrical items.

1.03 INFORMATIONALSUBMITTALS

A. Product Data:
   1. List of proposed material identifying manufacturer, type and model number for equipment to be provided for complete job.
   2. Manufacturer’s catalog sheets marked to indicate specific type, model or catalog number of equipment to be provided.
   3. Equipment drawings, elementary diagrams, schematics, wiring, performance curves, instruction manuals, and all other documentation necessary for complete description of material being supplied and as required to support installation, commissioning and maintenance of equipment. Manufacturer's standard connection diagram or schematic showing more than one scheme of connection will not be accepted.
   4. Manufacturer’s technical descriptions, product data sheets, and applicable manuals for use in protective device system coordination including:
      a. Fuse manufacturer, type, ratings, and protection curves.
      b. Circuit breaker manufacturer, type, trip setting ranges, and protection curves.
      c. Relay trip device ranges, curves, and setting manuals.
      d. Transformer damage curves.
      e. CT ratios and saturation curves.
      f. VT ratings.
   5. List of nameplates
   6. List of recommended spare parts required for equipment start-up, commissioning and operation.
   7. List of special maintenance tools required for installation and operation of equipment.
   8. If necessary, provide additional data to clearly demonstrate that proposed alternate equipment meets or exceeds equipment as specified.
   9. When requested by Engineer, submit system information, including but not limited to, utility feeders, existing relays, circuit breakers, fuses, and transformers.

1.04 CLOSEOUT SUBMITTALS

A. Operation and maintenance manuals. Provide at minimum:
   1. Itemized equipment list.
   2. General description and technical data.
   3. Receiving, storage, installation, and testing instructions.
   4. Operating and maintenance procedures.
   5. Complete set of final drawings requiring no further action.
   6. Complete documentation of inspections and tests performed, including logs, curves, and certificates. Documentation shall note any replacement of equipment or components that failed during testing.
   7. Spare parts list.
   8. Lubrication recommendations.
   9. Warranty information.

1.05 MAINTENANCE MATERIALS

A. Extra materials: Provide touchup paint in same type and color to repair at least 25% of finish-painted equipment surface. Paint shall be sufficient to perform touch-up painting in accordance with shop-applied material instructions for repair painting.

B. Each piece of equipment shall be furnished with special tools as required for installation, maintenance, and dismantling of equipment.
   1. Furnish in quantities as necessary to complete work on schedule.
   2. Tools shall be new and shall become property of Owner.
   3. Tools and intended use shall be identified in assembly instructions. Tools shall only be used for their intended purpose.

1.06 QUALITY ASSURANCE

A. Manufacturer qualifications:
   1. Manufacturer of equipment specified shall be recognized in industry for normally supplying this type of equipment.
   2. ISO certified.
   3. When requested by Engineer, provide list of similar equipment installations that have employed identical equipment from manufacturer.

B. Installer qualifications:
   1. Installer shall be skilled in trade and shall have thorough knowledge of products and equipment specified.
   2. Cutting, drilling, trenching, or channeling necessary to properly install equipment shall be performed by competent skilled crafts people in safe, professional manner.

C. Regulatory requirements: Perform electrical construction in accordance with NEC, local and state codes as applicable to job site.

D. Materials and equipment furnished for permanent installation shall be new, unused, and undamaged.

E. Asbestos not allowed.

F. Parts shall be manufactured to American industry standard sizes and gages to facilitate maintenance and interchangeability. Metric sized components not allowed unless specifically requested and approved.

1.07 DELIVERY, STORAGE, AND HANDLING

A. Pack, ship, handle, and store in accordance with manufacturer's requirements.

B. Ship equipment completely factory assembled unless physical size, arrangement, configuration, or shipping and handling limitations make this impracticable. Shipping splits and required field assembly shall be identified with equipment submittals.

C. Costs associated with sections, accessories, or appurtenances requiring field assembly shall be Contractor's responsibility.

D. Separately packaged parts and accessories shall be consolidated and shipped together with equipment. Mark each container clearly to identify contents and as belonging with main equipment.
   1. Provide individual weatherproof itemized packing slips attached to outside of each container for contents included. Provide duplicate inside each container.
   2. Attach master packing list, covering accessory items for equipment, to main piece of equipment.
   3. Mark each container with project identification number for equipment and container number followed by total number of containers.

E. Equipment shall be suitably protected during shipment, handling, and storage. Damage incurred during shipment shall be repaired at no cost to Owner.

F. Protect coated surfaces against impact, abrasion, and discoloration.

G. Electrical equipment and insulation systems shall be protected against ingress of moisture. Use space heaters if necessary to protect against moisture.

H. Grease and protect exposed threads.

I. Close pipe, tube, and conduit connections with rough usage plugs. Seal and tape open ends of piping, tubing, and conduit.

J. Cover equipment openings to seal equipment.

K. Store materials in clean, dry place. Protect from weather, dirt, water, construction debris, and physical damage in accordance with manufacturer's instructions.

1.08 SCHEDULING

A. Coordinate with Owner early and late shipping and delivery schedules for items requiring storage and handling at Site.

1.09 WARRANTY

A. Electrical equipment shall be provided with manufacturer's standard warranty, but not less than 1 year.

PART 2 PRODUCTS

2.01 DESIGN CRITERIA

A. Service conditions: Provide equipment and material suitable for intended service and installation at location indicated.

B. Low-voltage auxiliary and control power.
   1. Electrical power for ac control and instrumentation equipment:
      a. Provide devices necessary for proper operation and protection of equipment during electrical power supply and ambient temperature fluctuations specified.
      b. Design for continuous operation at any voltage from 85% to 110% of nominal voltage. Dropout voltage shall be 60% of nominal for relays and 75% for contactors and starters.
   2. Electrical power for dc devices:
      a. Design for continuous operation on ungrounded station battery system, capable of maintaining operation at any voltage from 80% to 112% of nominal voltage.
      b. Electrical devices served shall not impose ground connection on supply.

C. Auxiliary power: Design auxiliary equipment for low-voltage service, with electrical power designed to operate from one of nominal electrical power sources as follows and as indicated on Drawings:

Volts	Phase	Frequency
480Y/277	3 or 1	60
120/240	1	60

D. Design equipment enclosure in accordance with seismic requirements listed in most recent local building codes and Data Sheets.

2.02 HAZARDOUS AREAS

A. Areas where flammable and combustible liquids, gases, and dusts are handled and stored shall be classified for purpose of determining minimum criteria for design and installation of electrical equipment to minimize possibility of ignition.

B. Drawings indicate extent of each hazardous location, describing applicable vertical and horizontal limits of hazards and identifying each hazardous location by NEC Class, Division and Group. Designation of either specific maximum operating temperature of equipment or temperature ranges may also be indicated. Every effort will be made to locate electrical equipment in nonhazardous areas of facilities having hazardous locations.

C. Electrical equipment in areas classified as hazardous shall be constructed and installed in accordance with requirements of ANSI/NFPA 70, National Electrical Code. Equipment and components installed in hazardous area shall be rated and UL-listed for hazardous area class, division, and group designation. References for use in classification of areas and specification of requirements for electrical installation in such areas, include following:
   1. NFPA 70E, Standard for Electrical Safety in Workplace.
   2. NFPA 30, Flammable and Combustible Liquids Code.
   3. NFPA 497, Recommended Practice for Classification of Flammable Liquids, Gases, or Vapors and of Hazardous Classified Locations for Electrical Installations in Chemical Process Areas.
   4. NFPA 499, Recommended Practice for Classification of Combustible Dusts and of Hazardous Classified) Locations for Electrical Installations in Chemical Process Areas.
   5. NFPA 654, Standard for Prevention of Fire and Dust Explosions from Manufacturing, Processing, and Handling of Combustible Particulate Solids.
   6. NFPA 820, Standard for Fire Protection in Wastewater Treatment and Collection Facilities.

2.03 FACTORY WIRING

A. Select cable for electrical and environmental conditions of installation, and suitable for unusual service conditions where encountered.
   1. Proper temperature application cable shall be used throughout, but shall be not less than 90ºC rated.
   2. Conductors routed over hinges shall use extra-flexible stranding.
   3. Cable insulation shall be rated for maximum service voltage used, but not less than 600 volts.
   4. Splices not allowed.

B. Panel, control cabinet, switchboard, motor control center, and switchgear wiring shall use flame retardant cross-linked polyethylene (XLP) or flame retardant ethylene-propylene rubber (EPR) insulation that meet or exceed requirements of UL 44 for Types SIS, and XHHW.
   1. Minimum size: No. 14 AWG (1.5 mm2).Conductors: Annealed bare copper with fine stranding passing IEEE 1202 and UL 83 VW-1 flame test.

C. Instrumentation, thermocouple, and thermocouple extension wire shall use twisted shielded pairs/triads having flame retardant cross-linked polyethylene (XLPE) insulation, and chlorinated polyethylene (CPE) jacket.
   1. Minimum size: No. 16 AWG (1.0 mm2).
   2. Conductor type:
      a. Instrument: Annealed copper Class B stranding.
      b. Thermocouple: Solid alloy.
   3. Provide each pair/triad with shield.
   4. Shielding shall consist of aluminum-polyester tape and flexible strand tin-coated No.18 AWG (0.75 mm2) copper drain wire.
   5. Drain wire for each instrument cable shall be insulated with spaghetti sleeve. One end of shield wire shall be terminated on grounded terminal.
   6. Cables shall pass IEEE 1202 and ICEA T-30-520 70,000 Btu/hr vertical tray flame test, and each conductor shall pass UL 83 VW-1 flame test.

D. Terminations:
   1. Conductor terminal connectors shall be insulated, ring tongue, compression type connectors properly sized for conductor and terminal.
      a. Connectors shall be constructed of copper and shall be tin-plated.
      b. Interior surface of connector wire barrel shall be serrated; exterior surface of connector wire barrel shall be furnished with crimp guides.
   2. Uninsulated terminal connectors shall be used for conductors terminated on devices equipped with individual fitted covers, such as, but not limited to, control switches and lockout relays.
   3. Connections requiring disconnect plug and receptacle type devices shall be provided with factory-terminated conductors on each plug and receptacle.
      a. Plugs and receptacles shall be factory wired into junction boxes containing terminal blocks for external connections.

b. Conductors on disconnect portion of plug-receptacle assemblies shall be in common jacket.
4. Prior to shipment of equipment, remove temporary wiring installed in factory for equipment testing.
5. Current transformers shall terminate on shorting type terminal blocks. Ship with shorting jumpers installed.

E. Identification and labeling:
1. Provide conductor identification sleeve on each end of each internal conductor. Mark each sleeve with opposite end destination identification with nonsmudging, permanent black ink. Sleeves shall be UV-resistant self-adhesive type or PVC, not less than 1/2" (13 mm) long.
2. Permanently label each terminal block, terminal, conductor, relay, breaker, fuse block, and other auxiliary devices to coincide with identification indicated on manufacturer's drawings.

2.04 LOW-VOLTAGE FIELD WIRING

A. Nationally or internationally recognized cable manufacturer shall produce cable provided.
1. Metal-clad cable, NEC Type MC, may not be substituted in place of cable and conduit unless specified otherwise, or unless approved in writing.
2. Comply with code and Project requirements directly associated with use of each cable type.

B. Cables specified are for voltages 600 volts and below.

C. Wiring shall be annealed, bare copper with not less than 98% conductivity, unless specified otherwise.

D. Provide conductor identification sleeve on each end of every conductor. Mark each sleeve with typed, non-smudging, permanent black ink. Hand written sleeves are not acceptable. Sleeves shall be UV-resistant self-adhesive type or PVC, not less than 1/2" (13 mm) long. Conductor identification as shown on the:
1. Electrical oneline drawings
2. Cable schedule
3. Schematic drawings,

E. Multi conductor cables and multi wire circuits shall identify each conductor individually at each end of the conductor (i.e. P104-1, P104-2, P104-3, P104-4, P104-5)

F. General-purpose building conductor used on interior lighting circuits and general-purpose branch circuits routed entirely in conduit shall be single conductor.
1. Voltage rating: 600-volt.
2. Conductor: Class B, solid or stranded, annealed, uncoated copper, minimum size No. 12 AWG (4.0 mm2).
3. Insulation: Polyvinyl chloride (PVC) complying with NEC for type THHN or THWN.
4. Jacket: Overall clear nylon jacket applied over conductor insulation, UL-listed as gasoline and oil resistant.
5. Cables shall pass IEEE 383 70,000 Btu/hr, UL Standard 83 for Type THHN or THWN wire.
6. Color coding:
a. Provide conductor in following colors when available.
1) Source voltage of 120/240 volts:
a) Phase A: Black.
b) Phase B: Red.
c) Neutral: White.
2) Source voltage of 480Y/277 volts:
a) Phase A: Brown.
b) Phase B: Orange.
c) Phase C: Yellow.
d) Neutral: Gray.
b. When color coding not available provide black and color-coded with field-applied tape.
7. Installations in dry or damp locations shall utilize THHN and installations in wet locations shall utilize THWN.

G. Single-conductor, low-voltage power cable for motors, feeders, branch circuits, and dc circuits routed in conduit, duct bank, or cable tray:
   1. Voltage rating: 600-volt.
   2. Conductor: Annealed, bare copper, Class B, stranded, minimum size No. 12 AWG (4.0 mm2).
   3. Insulation: Cross-linked polyethylene (XLPE), complying with NEC Type XHHW-2. Insulation shall be sunlight resistant and cable tray (CT) rated.
   4. Jacket: None.
   5. Color coding: Black.
   6. Wire shall be identified by surface marking indicating manufacturer, conductor size, conductor material, voltage rating, UL symbol, and listed type.
   7. Cables shall pass IEEE 383 70,000 Btu/hr, UL 1581, VW-1 vertical flame test, or ICEA T-29-520, 210,000 Btu/hr vertical tray flame tests for armored cables.
   8. Temperature rating shall be 90o C for normal operation in wet or dry locations.

H. Multiconductor, low-voltage power cables for motors, feeders, and branch circuits routed in cable tray, conduit or duct bank:
   1. Voltage rating: 600-volt.
   2. Conductors: Annealed, bare copper, Class B, stranded, minimum size No. 12 AWG (4.0 mm2).
   3. Insulation: Cross-linked polyethylene (XLPE) complying with NEC Type XHHW-2.
   4. Jacket: Flame-retardant, heat-, moisture-, and sunlight-resistant; polyvinyl chloride (PVC).
   5. Color coding: Insulated phase conductors shall be black and shall have printed numbers in accordance with ICEA Method 4. Each cable shall be identified by means of surface ink printing indicating manufacturer, number of conductors, size, metal, voltage rating, and UL listing as suitable for cable tray use.
   6. Phase conductors shall be cabled together with Class B stranded, bare copper grounding conductor and fillers. Ground wire size shall comply with requirements of UL 1277.
   7. Cover cable assembly with helically applied polyester binder tape with minimum 10% overlap.
   8. Cables shall pass IEEE 383 70,000 Btu/hr or ICEA T-29-520, 210,000 Btu/hr vertical tray flame test for armored cables.
   9. Temperature rating: 90°C for normal operation in wet or dry locations.

I. Multiconductor, low-voltage power cables for motors fed from adjustable speed drives, any installation.
   1. Voltage rating: 600-volt.
   2. Conductors: Annealed, bare copper, Class B, stranded, minimum size No. 10 AWG (6.0 mm2)
   3. Insulation: Flame-retardant, cross-linked polyethylene (XLPE) complying with physical and electrical requirements for NEC Type XHHW-2.
   4. Jacket: Flame-retardant, polyvinyl chloride (PVC).
   5. Armor/shield: Continuously welded and corrugated high conductivity aluminum.
   6. Ground conductors: 3 segmented Class B strand, annealed copper conductors sized to meet requirements of UL 1569.
   7. Marking: Insulated phase conductors shall be black and shall have printed numbers in accordance with ICEA Method 4. Each cable shall be identified by means of surface ink printing indicating manufacturer, number of conductors, size, metal, voltage rating, and UL listing.
   8. Cables shall pass IEEE 383 70,000 Btu/hr or ICEA T-29-520, 210,000 Btu/hr vertical tray flame tests for armored cables, and individual conductors UL-approved and marked with FT-4 designation.
   9. Rated for Class 1, Div. 1 hazardous locations.
   10. Conductors shall be temperature rated for 90ºC maximum continuous operating temperature in wet or dry locations.

J. Multiconductor cable for control, interlocks, current transformers (CTs), voltage transformers (VTs), routed in cable tray and conduit:
   1. Voltage rating: 600-volt.
   2. Conductors: Annealed, bare copper, Class B, stranded, control and interlock cables minimum size No. 14 AWG (2.0 mm2). For VTs cables minimum size shall be No.12 AWG (4.0 mm2); for CTs cables minimum size shall be No. 10 AWG (6.0 mm2).
   3. Insulation: Flame-retardant, cross-linked polyethylene (XLPE) or complying with NEC Type XHHW-2.
   4. Jacket: Flame-retardant, heat-, moisture-, and sunlight-resistant; polyvinyl chloride (PVC).

5. Conductors shall be cabled together with nonhygroscopic fillers.
6. Cover cable assembly with helically applied binding tape with minimum 10% overlap.
7. Color coding: Insulated conductors shall have colored insulation meeting ICEA Method 1, Table E2 color code (K2 color code).
8. Each cable shall be identified by means of surface ink printing indicating manufacturer, number of conductors, size, voltage rating, and UL listing as rated for cable tray.
9. Cables shall pass IEEE 383 70,000 Btu/hr or ICEA T-29-520, 210,000 Btu/hr vertical tray flame tests for armored cables.
10. Temperature rating: 90°C for normal operation in wet or dry locations

K. Instrumentation cable installed indoor or outdoor routed in cable tray, conduit, and ducts:
1. Voltage rating: 300-volt.
2. Conductors: Annealed, bare copper, Class B, stranded, minimum size No. 16 AWG (1.0 mm2).
3. Insulation: Flame-retardant polyvinyl chloride (PVC).
4. Jacket: Flame-retardant, heat-, moisture-, and sunlight-resistant; polyvinyl chloride (PVC).
5. Pairs/triads: Each twisted with lay not exceeding 2" (50 mm).
6. Color code: Insulated conductors shall have colored insulation meeting ICEA Method 1, Table E-2 color code (K2 color code): Pairs black/red; Triads black/red/blue.
7. Assembly:
   a. Each pair or triad shall be cabled together with aluminum/polyester tape shield helically wrapped with minimum lap of 15% of tape width and isolation tape. Entire cable assembly shall have overall aluminum/polyester tape shield helically wrapped.
   b. Flexible strand tin-coated No.18 AWG (0.75 mm^2) copper drain wire shall be helically wound between twisted conductors and tape shield.
8. Each instrumentation cable shall be identified by means of surface ink printing indicating manufacturer, conductor size, and quantity, UL listing.
9. Cables shall pass UL 1581, 70,000 Btu/hr flame test.

L. Thermocouple extension cable circuited in cable tray or conduit:
1. Voltage rating: 300-volt.
2. Conductors:
   a. No. 16 AWG solid alloy (+Chromel / -Constantan); ANSI and ASA/ISA Type "EX".
   b. No. 16 AWG solid alloy (+Chromel / -Alumel); ANSI and ASA/ISA Type “KX”.
   c. No. 16 AWG solid alloy (+Iron / -Constantan); ANSI and ASA/ISA Type “JX”.
3. Insulation: Flame-retardant polyvinyl chloride (PVC), color code:
   a. Type EX: Purple (+) and red (-).
   b. Type KX: Yellow (+) and red (-).
   c. Type JX: White (+) and red (-).
4. Jacket: Flame-retardant, heat, moisture, and sunlight-resistant; polyvinyl chloride (PVC); color code:
   a. Type EX: Purple.
   b. Type KX: Yellow.
   c. Type JX: Black.
5. Assemble insulated conductors with 1-1/2" to 2-1/2" (38 mm to 63.5 mm) twisted lay.
6. Assembly: Provide with helically applied, laminated aluminum/polyester tape shield, with minimum lap of 15% of tape width. Flexible strand tin-coated No.18 AWG (0.75 mm2) copper drain wire shall be helically wound between twisted conductors and tape shield.
7. Cables shall pass UL 1581, 70,000 Btu/hr flame test.

M. Provide high-temperature wire around process equipment operating at temperatures exceeding standard cable ratings.
1. Voltage rating: 600-volt.
2. Temperature rating: Up to 1000ºC.
3. Conductor: Stranded, “A” nickel.
4. Insulation: Layers of ceramic fiber braids.
5. Jacket: Overall metallic sheath.

N. Category 6 communication cable circuited in tray, conduit or used for field wiring internal to cabinets.
   1. Conductor: Solid, bare copper minimum No. 23 AWG.
   2. Insulation: Fluorinated ethylene propylene (FEP) insulated singles.
   3. Insulated conductors: Unshielded, twisted 4 pairs enclosed with a spline fluorinated ethylene propylene filler material.
   4. Cable assembly shall be covered with clear “Flamearrest” jacket, sequentially marked at 2’ (600 mm) intervals. Ripcord shall be integrally installed to allow easy removal of jacket material.
   5. Each communication cable shall be identified by means of surface ink printing indicating manufacturer, model, or catalog number. Cable shall meet ANSI/TIA 568-C.2 CAT6.
   6. Cables shall be capable of passing UL flame test Type CMP.

O. Uninsulated and Insulated grounding conductors:
   1. Voltage rating: 600 volts, green XHHW-2, when insulated.
   2. Conductors: Class B, stranded, bare copper.

P. Pin and socket connectors are not allowed.

2.05 LOW-VOLTAGE SPLICES AND TERMINATIONS

A. Splices, except as in lighting and general purpose power circuits specified below, not allowed unless specifically indicated on Drawings or required for connection to equipment.

B. Temperature rating of splices and terminations shall be rated no less than 75°C.

C. Splices allowed in lighting and general-purpose power circuits.
   1. Provide wire and cable connectors of high-conductivity, corrosion-resistant material with contact area equal to at least current carrying capacity of wire or cable.
   2. General lighting and general-purpose building power circuits:
      a. Twist-type, insulated spring connectors for splices on solid or stranded conductors smaller than No. 6 AWG.
      b. Use indent, hex screw, or bolt clamp-type connectors, with or without tongue for splices on solid or stranded conductors No. 6 AWG and larger.
      c. Apply insulating 600-volt tape.

D. Insulating tapes and compounds for terminations and splices shall be UL-listed for intended use, location, and voltage by manufacturer.

E. Termination of conductors to equipment with bolted connections:
   1. Use compression type lugs:
   2. Compression lugs for cables 250 kcmil and larger shall have at least 2 clamping elements of compression indents, and provision for at least 2 bolts for joining to apparatus terminals.
   3. Crimping hand tools used for securing conductors in compression type connectors or terminal lugs shall be made for purpose and conductor sizes involved.
   4. Crimping tools shall be ratchet-type preventing tool from opening until crimp action is completed.
   5. Tools shall be product approved by connector manufacturer.

F. Terminals:
   1. Conductors No. 10 AWG and smaller: Marathon 1500 Series.
   2. Conductors larger than No. 4/0 AWG: Terminate to tinned copper bus bar drilled and tapped with standard NEMA sized and spaced holes.

G. Coordinate sizes and types of conductor terminals for 600-volt power cable terminations in equipment with furnished conductor and terminal connector data.

H. Provide 600-volt rated terminal blocks for instrumentation and control conductors for connection to circuits external to specified equipment, and for internal circuits crossing shipping splits.
   1. Use crimp-on terminals matching termination point terminations in manufacturer-furnished panels. Splices not allowed.

2. Terminal blocks for thermocouple extension wire: Buchanan “Medium Duty” with thermocouple contacts or Marathon 200 Series with Omega Engineering, Inc. Type TL terminal lugs.
3. Furnish with white marking strips.
4. Where permitted by safety codes and standards, provide without covers. Neither step-type terminal blocks nor angle mounting of terminal blocks allowed.
5. Fuses may be mounted on terminal blocks.
6. Maximum 2 conductors in accordance with termination point.

I. Terminal blocks for external connections shall leave from centrally mounted location, not from individual devices in enclosure.
1. Group-in instrument and control compartment for easy accessibility.
2. Provide sufficient space on each side of each terminal block to allow orderly arrangement of leads to be terminated on block.
3. Locate auxiliary equipment in compartments, enclosures, or junction boxes so service personnel will have direct access without interference from structural members and instruments without removal of barriers, cover plates, or wiring.
4. Do not mount terminal blocks in compartments containing cables or buses operating at voltages above 600 volts.
5. Size for wire sizes of incoming conductors as necessary.

J. Install shorting-type terminal blocks nearest current transformer in accessible location for each set of CTs supplied with equipment furnished, no other shorting-type terminal blocks allowed, unless specified otherwise.

K. Install din-rail mounted miniature circuit breakers (MCB) for protection of VT circuits on line and load side. Breakers shall have alarm contacts wired to terminal blocks.

L. Terminate each conductor in multiconductor control cable or as shown on Drawings. Provide 10% spare terminals for circuit modifications.

M. Each control switch and lockout relay shall have contacts wired out to terminal blocks.

N. Cable designations shall be visible after installation without requiring physical movement of cable.

2.06 CABLE SEPARATION

A. Use following general practices for cable separation for all levels of cabling.

B. Cables of like signal levels and power levels shall be grouped together in like raceways.

C. Different voltage class group levels shall run in separate raceways.

D. Circuit cables dedicated to unit shall be run in separate raceways from other unit.

E. Redundant power supply circuit cables shall not be run in same raceway.

F. If wires are same level and same type signal, group those wires from one cabinet to any one specific location together in multi-conductor cables.

G. When unlike signals must cross in trays or conduit, cross in 90° angles at maximum spacing. Where it is not possible to maintain spacing, place grounded steel barrier between unlike levels at crossover point.

H. Voltage class group levels:
1. MV – Medium-voltage
2. P – Power Low-voltage
3. C – Control Power (discrete signal, loop power, $\leq$ 125-volt control power)
4. S – Low Level Signal (analog and digital data)
5. F – Fire protection system signaling circuit.

I. Voltage class group level minimum cable separation distance for parallel routing circuits:

	MV	P	C	S/F
MV	0”	6”	12”	24”
P	6”	0”	12”	12”
C	12”	12”	0”	6”
S/F	24”	12”	6”	0”

J. Fire protection system signaling circuits shall not be in same raceway as other voltage class groups.

2.07 ELECTRICAL ENCLOSURES

A. Size junction boxes, pull boxes, and enclosures in accordance with requirements of NEC.

B. Provide nameplates for electrical enclosures. Nameplate shall include unique identifier (name) of the electrical enclosure, voltage, electrical circuit number(s) or function of electrical enclosure. See nameplate section for sizing and spacing of letters.

C. Junction boxes and pull boxes 4” (100 mm) trade size or smaller in any dimension shall be galvanized malleable iron, or cast ferrous metal NEMA rated for installed location. Do not use concentric knockouts.

D. NEMA rating of junction boxes, pull boxes, and electrical enclosures larger than 4” (100 mm) trade size in any dimension shall be as follows, unless required otherwise.
   1. NEMA rating for electrical enclosures installed in nonhazardous locations:
      a. Indoor:
         1) Dry environmentally controlled area: NEMA 12.
         2) Corrosive wet or hose-down area: NEMA 4X
         3) Outdoor: NEMA 4X.
   2. Construct noncast-metal electrical enclosures from reinforced steel plate capable of supporting devices mounted on or within enclosure without deflection. Steel plate thickness shall conform to UL requirements.
   3. Enclosures shall be of adequate strength to support mounted components during shipment and installation.
   4. Field-drill conduit entrances.
   5. Provide electrical enclosures located in outdoor, wet, or hose down areas with space heaters completely wired within enclosure. Provide:
      a. Space heater.
      b. Adjustable thermostat with set point temperature indicator.
      c. One miniature circuit breaker protective device.
   6. Space heaters, thermostat, and protection shall not interfere with cable into or out of enclosure, or with maintenance or replacement of devices within enclosure.
   7. Use of space heaters shall not change or discolor any painted surface.
   8. Space heater capacity shall maintain enclosure internal temperature above dew point under specified service conditions.

E. Space heaters shall be rated for 240 volts ac minimum, and shall be sized for operation on applied voltage of 120 volts ac. Outdoor electrical enclosures with ventilating openings:
   1. Louver on outdoor electrical equipment and protect in accordance with NEMA type.
   2. Equip openings on outdoor electrical equipment with fine mesh filters and stainless steel bug screens.

2.08 OUTLET BOXES

A. Outlet boxes for concealed wiring systems shall be sheet metal, galvanized or cadmium plated.

B. Provide nameplates for outlet boxes. Nameplate shall include source panel and circuit number.

C. Boxes shall be minimum 4” (100 mm) square, 1-1/2” (38 mm) deep, sized to accommodate devices and number of conductors in accordance with NEC. Equip with plaster ring or cover as necessary for flush finish.

D. Exposed conduit systems shall have surface-mounted boxes unless specified otherwise. Boxes for exposed wiring in nonhazardous, noncorrosive, and nonweatherproof locations shall be malleable iron, cadmium finish or cast aluminum alloy, minimum 4” (100 mm) square, 1-1/2” (38 mm) deep.

E. Enclosures shall be as required for areas in which they are installed and as specified.
1. Install boxes flush in masonry construction; design for intended use.
2. Recessed boxes where fixture will be mounted shall be minimum 4” (100 mm) and octagonal in shape or 4” (100 mm) square by 1-1/2” (38 mm) deep with round plaster ring. Where used as junction box, boxes shall be minimum 4” (100 mm) square by 2-1/8” (53 mm) deep.
3. Outlet boxes for wall concealed telephone and signaling systems shall be 4” (100 mm) square by 1-1/2” (38 mm) deep, minimum. Furnish with plaster ring and cover plate.
4. Floor boxes for floor outlets:
   a. Cast-metal with threaded conduit entrances, brass flange ring and brass duplex flap cover plate.
   b. Watertight and have leveling and adjustment screws for adjusting cover plate to finished floor.
   c. Minimum 4” (100 mm) diameter and 3-1/2” (88 mm) deep with approved gasket or seal between adjusting ring and box.
5. Construct floor outlets for combination signaling, data, and power outlets of steel base, PVC housing, and steel bracket to allow feed through wiring and activation load-bearing support. Box construction shall meet UL 514A requirements.
   a. Entire housing shall be removable for unrestricted access.
   b. Once assembled, PVC housing shall be capable of carrying 6,000 lb (2722 kg) load.
   c. Coordinate outlet requirements with communication system requirements.
6. Floor boxes in 2-hour rated floors shall be secured in cored hole and shall be UL classified and listed for 2-hour rated floors.

2.09 PULL AND JUNCTION BOXES

A. Furnish junction boxes and pull boxes were shown on Drawings, and where necessary to facilitate pulling wires and cables without damage.

B. Provide nameplates for pull and junction boxes. Nameplate shall include unique identifier (name) of the pull and junction box, voltage, electrical circuit number(s) or function of the electrical enclosure. See nameplate section for sizing and spacing of letters.

C. Above ground boxes shall be formed from sheet steel, with corners folded in and securely welded with inward flange on each of 4 edges.

D. Drill box for mounting and attachment of cover; galvanize after fabrication.

E. Cover shall be made of one-piece galvanized steel and provided with stainless steel round head machine screws.

F. Box and cover shall be made of code gage steel, or heavier if shown on Drawings.

G. Boxes shall be minimum 4-1/2” (113 mm) deep. Size shall be in accordance with NEC. Use next larger standard size when necessary in accordance with manufacturer standard sizes.

H. Provide pull and junction boxes without knockouts for field drilling.

I. Enclosures shall be as required for areas in which installed and in accordance with requirements specified.

J. Underground boxes shall be specifically designed and constructed for intended installed location, and shall be either pre-formed concrete or PVC. Covers shall be capable of withstanding, without failure, type of traffic in general area.

K. If pull and junction boxes are exposed in and around architecturally finished surfaces, paint box to match finish of nearby surfaces, unless indicated otherwise.

L. Bolt-on junction box covers 3'-0" (900 mm) square or larger, or heavier than 25 lb. (11 kg) shall have permanent rigid handles. Covers larger than 3'-0" x 4'-0" (900 mm x 1200 mm) shall be split.

2.10 EQUIPMENT SAFETY GROUNDING

A. Install exposed raceway electrically continuous. Conduit and tray shall not be considered to be only ground conductor.

B. Furnish equipment that is part of integral shipping unit or assembly with bare copper ground conductor extending to central ground connection lug. Lug shall be suitable for field connection to local ground. Electrical equipment shall be considered any device that is energized.

C. Single-point ground connections required for proper operation of electronic equipment shall be insulated from equipment safety ground. Such connections shall be extended, using insulated cable, to single insolated termination point suitable for field connection to appropriate ground system.

D. Conduits that contain power circuits shall have ground conductor installed inside conduit. Ground conductor shall be bonded to equipment or tray or duct ground at both ends.

E. Provide ground bushing on each conduit containing power circuit. Connect ground bushings together inside enclosure and to enclosure ground lug or ground bus.
Use No. 8 AWG conductor for ground bushings trade size 1-1/2” (38 mm) and smaller.
Ground bushings larger than 1-1/2” (38 mm) shall be sized in accordance with requirements of NEC, but in no case shall they be smaller than No. 8 AWG.

F. Ground conductor: Uninsulated, Class B standard, round soft drawn uncoated copper as defined in NEMA WC71 and NEMA WC 74, unless specified otherwise.

G. Hardware: Clamps, bolts, washers, nuts, and other hardware used with grounding conductor shall be copper, copper alloy, high copper alloy, or silicon bronze.

2.11 CONTROL SWITCHES

A. Multistage, rotary-type rated 120 volts ac, 3 amperes, 30mm NEMA as required.

B. Handles shall be black, fixed, modern, pistol grip type. Provide engraved black plastic escutcheon plates with targets.

C. Provide nameplates for each control switch and lamp. Nameplate shall include unique identifier (name) and function of the control switch and lamp. See nameplate section for sizing and spacing of letters.

2.12 PUSHBUTTONS

A. Standard 30mm NEMA pushbuttons shall be heavy, industrial-type rated 120 volts ac, 3 amperes, as required.

B. Provide with colored LED lamps.

C. Provide nameplates for each pushbutton. Nameplate shall include unique identifier (name) and function of the pushbutton. See nameplate section for sizing and spacing of letters

2.13 INDICATING LIGHTS

A. Status 30mm NEMA indicating lights shall be high-intensity, cluster, LED-type for panel mounting.

B. Provide nameplates for each indicating light. Nameplate shall include unique identifier (name) and function of the indicating light. See nameplate section for sizing and spacing of letters

C. Coordinate indicating light colors with indicated conditions as follows. Indicating lights shall be energized when condition exists and shall be de-energized when condition does not exist:
   1. Red: Equipment de-energized; such as motor stopped, valve closed, or breaker open.
   2. Green: Equipment energized; such as motor running, valve open, or breaker closed.
   3. White: Power on.

2.14 ALARM AND TRIP CONTACTS

A. Alarm contacts for remote annunciation shall be suitable for operation at 120 volts. Contacts shall be rated at least 0.5-ampere make and break, minimum.

B. Alarm contacts shall be normally closed contacts that open to alarm condition.

2.15 SEPARATELY MOUNTED COMBINATION MOTOR STARTERS

A. Enclosed, 3-phase, full-voltage, nonreversing, unless indicated otherwise.

B. Complete combination starter shall have minimum interrupting rating of 65 kA or greater if specified elsewhere or indicated on Drawings.

C. Starter enclosures shall have enclosure NEMA rating specified herein.

D. Starters shall have front cover-mounted nameplate identifying the starter, matching information shown on Drawings. See nameplate section for the required text, text size and spacing of letters.

E. Provide Soft Starts (Allen Bradley SMC3) starter with microprocessor-based contactor and integral electronic overload protection; minimum size shall be NEMA 1.

F. Each phase shall have microprocessor-monitored current sensor for motor running overload, phase loss and phase unbalance protection.
   1. Provide Class II ground fault protection; set to 20% of maximum continuous ampere rating and have delay of 20 seconds and run delay of 1 second to prevent nuisance trip on start.
   2. Single-speed starters shall be furnished with 3 current sensors. 2-speed starters shall be furnished with 6 current sensors.

G. Starters shall be furnished with motor circuit protectors (MCP) rated 600-volt.
   1. Each breaker shall be manually operated with quick-make, quick-break, trip-free toggle mechanism.
   2. Starters shall have external manual breaker-operating handle with provisions for up to 3 padlocks.
   3. Access door shall be interlocked with motor circuit protector, so door cannot be opened while breaker is closed except by interlock override.
   4. Starter contactor shall mechanically operate auxiliary contacts. Each starter shall include auxiliary contacts required for application, plus 2 spare NO and 1 spare NC contacts.
   5. Provide membrane-style pushbutton control module and LED lights, red and green indicating lights shall be provided as minimum on all starters Additional lights may be required if indicated on schematics, to control starter functions and indication. Pushbuttons and LEDs shall be clearly identified.
   6. Verify and match control power transformers, overload protection, and sizes of starters to actual equipment furnished.
   7. Size control power transformers (CPT) to supply control circuit and additional loading simultaneously. Minimum CPT size shall be 100 volts-amperes for Size 1 starters and 150 volts-amperes for Size 2 and larger starters.

8. CPTs shall have primary leads protected; one secondary lead protected and one secondary lead grounded. Provide DIN rail-mounted, miniature circuit breakers for protection. Fuses not allowed.
9. Starters for systems with system voltage of 120 volts or less shall not require CPT.
10. Two-speed starters and reversing starters shall be mechanically and electrically interlocked so only one set of contacts can be closed at any one time.

2.16 LOCAL SEPARATE MANUAL STARTERS

A. Separately enclosed manual starters, Soft Starts (Allen Bradley SMC3) shall be provided with adjustable, integral overload relay and short-circuit trip mechanism designed to trip at 12 times maximum current rating.

B. Starters shall use high-conductivity copper for current carrying parts.

C. Size starters for motors served in accordance with NEC and manufacturer's recommendations.

D. Mount manual starters in enclosures with NEMA rating for area as specified.

E. If applicable, starters shall be UL-listed and CSA-certified for group installations.

F. Accessories shall be available for auxiliary contacts, trip alarm, under-voltage release, and shunt trip for field installation.

G. Starters shall be pad-lockable with 3 padlocks in "On" and "Off" position.

H. Starters shall have front cover-mounted nameplate identifying the starter, matching information shown on Drawings. See nameplate section for the required text, text size and spacing of letters.

2.17 LOCAL SEPARATE LOW-VOLTAGE CIRCUIT BREAKERS

A. Provide 3-pole, molded-case, separately enclosed circuit breakers of interrupting rating of 65 kA at rated voltage, unless otherwise indicated on Drawings.
   1. Provide with thermal and instantaneous trip elements.
   2. Breakers shall use high-conductivity copper for current carrying parts. Breaker enclosures shall have NEMA type enclosure as specified.

B. Each breaker shall be manually operated with quick-make, quick-break, and trip-free toggle mechanism. Thermal elements shall withstand sustained overloads and short-circuit currents without injury and without affecting calibration.

C. Circuit breakers shall have "On," "Off," and "Tripped" indication and shall be pad-lockable with 3 padlocks in "On" and "Off" position.
   1. Breakers rated over 70 amperes shall be rated 100% and have adjustable electronic trip units.
   2. Breakers shall be capable of adding alarm, lockout, shunt trip, and under-voltage as options.

D. Provide nameplates for each separate circuit breaker enclosure. Nameplate shall include unique identifier (name) of the circuit breaker, description or name of the load, voltage, and the source "Fed from" electrical circuit number. See nameplate section for sizing and spacing of letters.

2.18 LOCAL SEPARATE DISCONNECT SWITCHES

A. Three-pole, heavy-duty, rated 600-volt with continuous current rating as shown on Drawings and as required by load.
   1. Type: Either molded-case or blade.
   2. Switches shall use high-conductivity copper for current carrying parts.

B. Switches shall be positive, quick-make, and quick-break mechanisms.
   1. Switch assembly plus operating handle shall be integral part of enclosure base.

2. Each switch shall have handle whose position is easily recognizable and which can be locked in “On” and "Off" position with 3 padlocks. "On" and "Off" positions shall be clearly marked.

C. Switches shall be UL-listed with ampacity rating. Where applicable, switches shall have defeatable door interlocks that prevent door from being opened while operating handle is in "On" position.

D. Fused and non-fused switches shall have front cover-mounted nameplate identifying the switch, matching information shown on Drawings. See nameplate section for sizing and spacing of letters. Nameplate shall have at least 4 lines of text that consist of
1. Line 1: Disconnect unique identifier (name)
2. Line 2: Voltage
3. Line 3: Appropriate description and location from which power is derived, (i.e. Fed from HP1, Room 127).
4. Line 4: Appropriate description and location of connected load (i.e. Load:Exhaust fan Room 255).

2.19 PLATES AND COVERS

A. Provide finish plates and covers of appropriate type and size for wiring and control devices, signal, and communication outlets.

B. Mark each plate, cover and blank cover with a nameplate to indicated function, voltage, source panel and circuit number. See nameplate section for sizing and spacing of letters. Unless indicated to be engraved plate, use self-sticking, clear membrane, UV-resistant labels with typed black letters for covers 4”x4” and smaller. Handwritten labels not allowed.Coordinate color with adjacent surfaces.

C. Raised cover galvanized steel plates acceptable for use on surface-mounted outlet boxes in unfinished areas where weatherproof plates are not required.

D. For weatherproof installations, cover plates shall be gasketed and rated for NEMA Type 4 installation.

E. Device plate mounting hardware shall be countersunk and finished to match plate.

2.20 WIRING DEVICES

A. Where more than one flush device is indicated in same location, mount devices in gangs under common plate.

B. Switches for control of ac lighting panel load circuits, single-pole, 3-way, and 4-way, shall be premium, heavy-duty specification-grade, and meet FS W-S-896E. Switches shall be rated for use at 120 or 277 volts and 20 amperes minimum.

C. Device color, if not shown on Drawings, shall be coordinated to match adjacent finishes.

D. Wall switches requiring pilot light indication shall have red LED pilot light when toggled “On.”

E. Pulse control of lighting contactors shall be 20 amperes, 120/277 volts, momentary, double-throw, and center "Off."

F. Standard convenience outlets: Premium, heavy-duty, specification-grade, duplex, 3-wire, grounding, 20-ampere, 125-volt for 120-volt circuits, and rated 250-volts for 240 or 208-volt circuits.

G. Ground fault circuit interrupter (GFI) receptacles: Duplex, 20-ampere, and 125 volts, feed-through type.

H. Isolated ground (IG) outlets: Duplex, 3-wire, with isolated grounding terminal, 20-ampere, and 125 volts. Outlets shall be orange in color, unless specified otherwise.

I. Provide nameplates for each switch, Nameplate shall include area served, source panel and circuit number.

2.21 WELDING

A. If special welding requirements are required for any piece of equipment during installation, requirements shall be stated on manufacturer's shop drawing of affected part.

B. Furnish detailed welding requirements with equipment shipment.

2.22 CIRCUIT BREAKERS

A. Molded-case, thermal-magnetic, bolt-in, individually front replaceable, and shall visibly indicate "On," "Off," and "Tripped" position.

B. Branch circuit breakers used for lighting circuits shall be switch duty rated, "SWD."

C. Breakers having multiple poles shall be manufactured as common trip type.

D. Interrupting rating shall be not less than interrupting rating of panelboards, and not series rated to achieve required short circuit interrupting rating.

E. Provide handle clips for 10%, or minimum of 2 whichever is greater, for breakers to prevent casual operation. If no breakers are indicated for installation, then provide on breakers labeled as spare.

F. Breakers, and provisions for future breakers, shall be provided in quantities, poles, and ampere ratings shown on Drawings.

G. Molded-case circuit breakers used in ac and dc panelboards and ac load centers shall be bolt-on type, G-frame size.

2.23 SHOP FINISHES

A. Manufacturer's standard coating systems shall be factory-applied. Coating systems shall provide resistance to corrosion caused by weather and industrial environments.
1. Surfaces inaccessible after factory or field assembly shall be protected for life of equipment.
2. Painted surfaces shall be filled to provide smooth, uniform base for painting.
3. Surfaces requiring field welds shall not be coated within 3" (75 mm) of field weld.

B. Coating material and application techniques shall conform to regulations of air quality management agency having jurisdiction.

C. Exterior surfaces of control and electrical equipment, including panels, cabinets, switchgear, transformers, and motors shall be manufacturer's standard colors unless specified otherwise.

D. Apply high-temperature coating systems to uninsulated equipment operating at temperatures at or above 200°F (93°C).

2.24 RUST-INHIBITING COMPOUNDS

A. Protect uncoated machined and ferrous surfaces subject to corrosion with rust-inhibitor compounds.

B. Rust-inhibitor compounds used to protect surfaces of equipment and piping exposed to feedwater or steam shall be completely water-soluble.

C. Coat surfaces to be field welded with consumable rust-inhibitor compounds that will not affect quality of weld.

D. External gasket surfaces, flange faces, couplings, rotating equipment shafts and bearings shall be thoroughly cleaned and coated with rust-inhibitor compounds.

2.25 GALVANIZING

A. Galvanized structural steel members and steel assemblies shall be pickled after fabrication. Remove scale, rust, grease, and other impurities, then hot-dip galvanized in accordance with ASTM.

B. If galvanized member is to be bolted, structural bolts shall be galvanized in accordance with ASTM.

2.26 IDENTIFICATION AND TAGGING

A. Conduits inside manholes, hand holes, building entrance pull boxes, and junction boxes shall be provided with 19-gage (1 mm) stainless steel identification tags, with 1/4" (6 mm) stamped letters and numbers.
   1. Attach conduit Identification tags with stainless steel banding. Tag position shall be readily visible for inspection.
   2. Raceway tags shall provide, as minimum:
      a. Identification tags of cables contain within conduits.
      b. Voltage class.

B. Cables passing through or terminating in manholes, hand holes vaults, and pull boxes shall be identified with a 3.5 inch X 2 inch black/yellow self-laminating, rigid vinyl tag, held in place with two plastic cable ties within 18" of cable entering or exiting the manhole, handhole vaults, and pull boxes, (unless indicated to be a 19-gage (1 mm) stainless steel identification tags with stamped lettering). Typed tag shall provide circuit identification information, number of conductors in cable, voltage and the "to/from location for the cable. Handwritten tags are not allowed.

C. Provide cable tags for each telecommunications cable or wire located in pull boxes manholes, handholes, and vaults. Cables shall be identified with a 3.5 inch X 2 inch black/yellow self-laminating, rigid vinyl tag held in place with two plastic cable ties within 18" of cable entering or exiting the manhole, handhole, vaults and pull boxes. Typed information on tag shall include the cable number, cable use, "to/from" location, and the number of fiber strands or copper conductors. Handwritten labeling is unacceptable.

D. Provide power, control, and instrumentation cables with permanent type identification markers with typed cable numbers and from/to information at each point of termination. Cable numbers and from/to information will be provided for circuits not associated with low-voltage panelboards.
   1. Position cable markers to be readily visible for inspection.
   2. Cable numbers shall match those as shown on cable schedule and drawings.
   3. Provide wire tags at each termination point for each conductor. Tags shall be permanent, wrap around, heat-shrinkable type with typewritten information.

E. Color-code power conductors with electrical tape or provide with colored jacket.
   1. Source voltage of 208Y/120 volts:
      a. Phase A: Black.
      b. Phase B: Red.
      c. Phase C: Blue.
      d. Neutral: White.
   2. Source voltage of 120/240 volts:
      a. Phase A: Black.
      b. Phase B: Red.
      c. Neutral: White.
   3. Source voltage of 480Y/277 volts:
      a. Phase A: Brown.
      b. Phase B: Orange.
      c. Phase C: Yellow.
      d. Neutral: Gray.
   4. Source voltage of 240/120-volt delta: High-leg systems shall not be used without Engineer approval.

5. Service entrance and equipment ground conductors shall be bare copper or green insulated conductor. Equipment bonding conductors shall be bare copper.
6. Isolated ground conductors shall be insulated; green in color with integral yellow stripe. No substitutions.

2.27 EQUIPMENT NAMEPLATES

A. Nameplates shall be laminated white-over-black plastic such that face is white with black engraved letters securely fastened with minimum of 2 self-tapping, stainless steel screws or permanent adhesive.

B. Provide nameplate for field devices and equipment. Each nameplate shall include description and tag identification shown on electrical one line or P&ID's, "Fed from" source and circuit number.

C. Placement and location of nameplate shall not cover the manufacture data nameplates of the equipment or enclosure. Bring to the attention of the Engineer or Owner if nameplate interferes with the natural ventilation of the equipment or enclosure. Relocate or modify the size for the nameplate to accommodate proper placement on the enclosure.

D. Placement and location of nameplate shall not interfere with the natural ventilation of the equipment or enclosure. Bring to the attention of the Engineer or Owner if nameplate interferes with the natural ventilation of the equipment or enclosure. Relocate or modify the size for the nameplate to accommodate proper placement on the enclosure.

E. Equipment 3" wide or less, such as boxes, panels, cover plates, control switches, pushbuttons, indicating lights, and control relays, etc. Nameplate shall be centered at the top of the equipment of the equipment and utilize 1/8" high capital letters, 10 letters per linear inch with 1/16" high space between lines of text.

F. Equipment larger than 3" wide and up to 6" wide such, as boxes, panels cover plates, control switches, push buttons, thermostats, heat trace heads, starters, light fixtures etc. Nameplate shall be centered at the top of the enclosure and utilize 3/16" high capital letters, 9 letters per linear inch with 1/8" high space between lines of text.

G. Equipment larger than 6" wide and up to 11" wide, such as pull boxes, panels, starters, light fixtures etc. Nameplate shall be centered at the top of the enclosure and 1/4" high capital letters, 5.3 letters per linear inch with 1/4" high space between lines of text.

H. Equipment larger than 11" wide and up to 16" wide, such as pull boxes, starters, transformers, disconnects, panelboards etc. Nameplate shall be centered at the top of the enclosure and utilize 1/2" high capital letters, 2.5 letters per linear inch for the unique identifier (name), and ¼" space between lines of text. The remaining data on the nameplate utilize 3/16" high capital letters, 6 letters per linear inch with 1/8" high space between lines of text.

I. Equipment larger than 16" wide and up to 24" wide, such as pull boxes, panels, starters, transformers, disconnects, panelboards etc. Nameplate shall be centered at the top of the and utilize 1/2" high capital letters, 2.5 letters per linear inch for the unique identifier (name), and 3/8" space between lines of text. The remaining data on the nameplate utilize 3/8" high capital letters, 3 letters per linear inch with 1/4" high space between lines of text.

J. Equipment larger than 24" wide and up to 36" wide, such as pull boxes, panels, transformers, disconnects, switchboards etc. Nameplate shall be centered at the top of the enclosure and utilize 1" high capital letters, 1 letters per .833 linear inch with 3/8" high space between lines of text for the unique identifier (name), and 3/8" space between lines of text. The remaining data on the nameplate utilize 1/2" high capital letters, 2.5 letters per linear inch with 3/8" high space between lines of text.

K. Equipment larger than 36" wide and up to 50" wide, such as pull boxes, panels, switchboards etc. Nameplate shall centered at 70" AFF or at the top of the enclosure. Utilize 1.5" high capital letters, 1 letters per 1.3 linear inch with 3/8" high space between lines of text for the unique identifier (name),

and 3/8” space between lines of text. The remaining data on the nameplate utilize 1/2” high capital letters, 2.5 letters per linear inch with 3/8” high space between lines of text.

L. Equipment larger than 50" wide, such as pull boxes, panels, switchboards etc. Nameplate shall centered at 70” AFF or at the top of the enclosure. Utilize 2” high capital letters, 1 letters per 1.5 linear inch with 1/2” high space between lines of text for the unique identifier (name), and 3/8” space between lines of text. The remaining data on the nameplate utilize 1/2” high capital letters, 2.5 letters per linear inch with 3/8” high space between lines of text.

M. Motor starters shall have front cover-mounted nameplate identifying the starter, matching information shown on Drawings. Nameplate shall have at least 5 lines of text that consist of
1. Line 1: Starter unique identifier (name)
2. Line 2: Voltage,
3. Line 3: Type (FVNR, FVR)
4. Line 4: Appropriate description and location from which power is derived, (i.e. fed from HP1, Room 127).
5. Line 5: Appropriate description and location of connected load (i.e. 15 hp water pump Room 255).

N. Motor starters, either separately mounted or contained in motor control centers, shall have nameplates identifying related equipment. Where separate control and indicating lights are used, starters shall have engraved or etched legends ("start," "stop," etc.) as shown on Drawings.

O. Provide control stations with nameplates identifying related equipment. Control and indicating lights shall have engraved or etched legends as shown on Drawings.

P. Provide circuit breakers within main switchboards and distribution switchboards with nameplates identifying related equipment being served.

Q. Provide equipment label, marking, and/or signage per requirements of latest edition of NFPA 70 and NFPA 70E.

2.28 HARDWARE

A. Provide hardware including, but not limited to, anchor bolts, nuts, washers, expansion anchors, wire nuts needed for installation.

B. Hardware smaller than 3/4” (19 mm) shall match NEMA standard size bolt holes on motors and electrical equipment.

C. Hardware shall be stainless steel.

2.29 STRUCTURAL SUPPORTS

A. Supports of structural steel or manufactured framing members shall be fabricated from lightweight stainless steel channel approved by manufacturer for intended use, provide required rods, anchors, inserts, clamps, spacers, shims, bolts and accessories.

B. Rods, all-thread, anchors, inserts, clamps spacers, shims bolts and accessories shall be stainless steel.

2.30 LOGIC SYSTEMS FACTORY TESTING

A. Prior to shipment, test electrical equipment containing solid-state logic systems in accordance with manufacturer’s standard tests for minimum of 120 hours under power.
1. Components tested shall include electronic devices; power supplies, input-output devices, operator interface devices, and interconnecting cables provided with system.
2. System shall be tested as complete assembly. Testing of individual components or modules not allowed as system tests.
3. Provide programming logic diagram and sequence of operation documentations.

B. System test shall include:
   1. Means of confirming logic or mathematical design response of system by simulating changes in system input.
   2. Test shall repeatedly cycle system through operations system will be expected to perform in service with loads on various components equivalent to those which will be experienced in actual service.
   3. Adjustment of power source voltages to high and low limits. Verify correct operation of system at both high and low power source voltage limits.

C. System shall be tested and verified capable of providing surge withstand capability in accordance with requirements of IEEE C37.90.

D. Perform tests with solid-state logic system exposed to ambient temperature appropriate to service for which associated electrical equipment is designed.

PART 3 EXECUTION

3.01 EXAMINATION OF SITE

A. Contractor shall be responsible for familiarity with Project Site conditions. Equipment furnished and installed shall be capable of withstanding most severe conditions that will be encountered.

3.02 PROTECTION OF WORK

A. Protect installed Work and provide temporary and removable protection for installed products. Control activity in immediate work area to prevent damage.

B. Damage occurring to building or equipment during installation shall be repaired or replaced to conditions existing prior to damage at no additional cost or delay to project or Owner.

3.03 INSTALLATION

A. Install equipment and materials in accordance with NFPA 70 and manufacturer's recommendations and Drawings.

B. Details for equipment and systems installed in accordance with industry standard techniques will not be furnished.

C. Installation details furnished on Drawings shall be followed unless found to be unsafe, inappropriate for equipment specified, or unachievable due to site conditions.

D. Install equipment indicated on Drawings as furnished by others, unless noted as installed by others.

E. Except as otherwise specified or indicated on Drawings, equipment shall be installed plumb, square, and level.

F. Sheet metal junction boxes, equipment enclosures, sheet metal raceways, and similar items mounted on earth-bearing walls shall be separated from wall not less than 1/4” (6 mm) by corrosion-resistant spacers.

G. Provide mounting associated hardware for junction boxes, equipment enclosures, raceways, cable trays, fixtures, and miscellaneous electrical devices.

H. Outdoor electrical enclosures housing terminal strips, fuses, starters and other electronic equipment shall be provided with a flat concrete working surface dimensioned to the NEC table 110.26(A)(1) Working Spaces.

I. Substations, switchgear, motor control centers, and similar equipment located outdoors shall be permanently sealed at base. Openings into equipment shall be screened or sealed as to prevent entrance of birds, rodents, and insects the size of wasps and mud daubers.
   1. Sealing material at base shall be concrete grout.
   2. Small cracks and openings shall be sealed from inside with silicone sealant.
   3. Large openings shall use galvanized screen mesh.
   4. For arc-resistance equipment sealing material al and method shall be per manufacture requirements.

3.04 TRIP SETTING COORDINATION

A. Motor overload protection shall be selected and set by Contractor based on final motor nameplate information. Size motor circuit protectors to coordinate with motor starting characteristics and overload protection. Submit summary of settings to Owner, list:
   1. Equipment project identification number.
   2. Nameplate information.
   3. Overload device trip range.
   4. Overload device setting.
   5. Trip device rating.
   6. Trip device setting if different from rated value.

B. Set protective devices and verify devices are operating within manufacturer's tolerances. Verify, set, and adjust settings of protective devices in accordance with equipment manufacturer recommendations and Engineer documentations.

C. Confirm overcurrent protection for general purpose distribution transformers is based on transformer nameplate rating.
   1. If Contractor-provided transformer requires higher overcurrent device rating to prevent tripping on energizing, increase overcurrent device and conductors in accordance with NEC.
   2. Coordinate work with Owner.

3.05 CABLE INSTALLATION

A. Prior to installation of each cable or cable group into assigned raceway, verify that raceway has been correctly sized.
   1. Where raceway is not indicated in cable schedule or on Drawings, size in accordance with requirements of NEC.
   2. If cable or raceway size indicated on Contract Documents is inadequate, notify Engineer.

B. Replace cables pulled into wrong raceway or cut too short to rack and train.

C. Do not reinstall cables installed in wrong raceway and removed. Discard cables unless inspected and accepted by Owner's Representative in writing.

D. Carefully lay or pull circuits in cable tray so neither cables nor tray is damaged.

E. Protect cables from dirt, water, oil, damaging chemicals, and from physical injury prior to, and during installation.

F. Cables shall be cut sufficiently long to conform to contour of trays, with particular attention paid to vertical inside bends.

G. Remove excessive slack so cables lie parallel to sides of trays.

H. Multiple single-conductor power cables No. 1/0 AWG (50 mm^2) or larger installed in cable tray that constitute single power circuit shall be grouped together in triplexed or quadriplexed arrangement. Maintain cable spacing to be 2.15 x O.D. of largest conductor in group or adjacent group.

I. Multiconductor power cables No. 4/0 AWG (120 mm^2) or larger installed in cable tray shall be installed in single layer with maintained spacing of not less than 1 cable diameter of largest cable.

J. Fasten cables to cable tray with rated nylon ties to hold cables in place. Fasten cables to vertical cable tray every 18" (450 mm) and to horizontal cable tray every 3' (1 m).

K. Provide flexible round metal tape, CO_2 propelled polyethylene cord, nylon rope, or manila rope in each conduit for future cable pulling.

L. Cable damage caused by improper pulling tension and excessive sidewall pressures shall be considered for any cable pulls that require use of mechanized cable pulling machine, whether installed underground or overhead.
   1. NEC requirements shall be used as guideline. Calculations shall be performed for duct bank runs over 300' (90 m), and for installations in conduit over 100' (30 m).
   2. Monitor pulling tension during installation of cable. Tension shall not exceed maximum recommended by cable manufacturer.
   3. To avoid damage from excessive sidewall pressure at bends, pulling tension shall not exceed cable manufacturer's recommendation.
   4. Pulling mechanisms, manual or power type, shall have rated capacity in tons legibly marked on mechanism.
   5. During installation, observer shall constantly watch dynamometer and record maximum tension achieved during pull.
      a. If excessive strain develops, stop pulling operation at once. Determine difficulty and correct.
      b. Provide records of dynamometer readings to Engineer.
      c. Inform Owner prior to cable pulls.
   6. Do not use woven wire cable grips. Only use pulling eyes for pulling cables.
   7. As soon as cable is pulled into place, remove pulling eyes and reseal cable.

M. Insert reliable nonfreezing type of swivel or swivel connection between pulling rope and eye to prevent twisting under strain.

N. Only use lubricants compatible with the cable jacket and does not promote flame propagation as recommended by cable manufacturer.

O. Outside of each cable reel shall be carefully inspected. Remove protruding nails, fastenings, or other objects that might damage cable.
   1. Perform visual inspection for flaws, breaks, or abrasions in cable sheath as cable leaves reel. Pulling speed shall be slow enough to permit inspection.
   2. Damage to sheath or finish of cable shall be sufficient cause for rejecting cable.
   3. Cable damaged during installation shall be replaced at no expense to Owner.

P. Permanent radius of each bend after cable installation shall be in accordance with manufacturer's recommendations.

Q. Cable supports and securing devices shall have bearing surfaces located parallel to surfaces of cable sheath. Install to provide adequate support without deformation of cable jackets or insulation.

R. Provide adequate cable end lengths. Properly install in junction boxes and manholes to avoid longitudinal strains and distorting pressures on cable at conduit bushings and duct end bells.

S. Final inspection shall be made after cables are in place. Where supports, bushings, and end bells deform cable jacket, provide additional supports.

T. Splices, joints, and connections shall be made only in accessible junction boxes in accordance with methods specified and instructions of cable manufacturer. Splices not allowed unless shown on Drawings.

U. Rough-in wiring terminated in junction boxes shall have at least 8" (200 mm) of free conductor coiled in box for connection to equipment and receptacles.

V. Circuit information for circuits originating from panelboards is indicated on panel schedules. Other circuits are identified on circuit schedule. Do not combine receptacle loads with lighting loads.

W. Panelboard circuits are indicated as individual runs. Circuits may be combined into common conduits in accordance with rules of NEC. Perform work associated with combining of circuits at no additional cost to Owner.

3.06 WIRING DEVICES, BOXES, AND FITTINGS

A. Install galvanized or cadmium plated, threaded, malleable iron boxes and fittings in:
1. Embedded in concrete walls, ceiling, and floors.
2. Outdoor exposed faces of masonry walls.
3. Locations where weatherproof cover is required by code or this specification.

B. Install galvanized or cadmium plated sheet steel boxes in:
1. Indoor exposed faces of masonry walls.
2. Interior partition walls.
3. Joist supported ceilings.

C. Rigid PVC device boxes shall be installed in exposed nonmetallic conduit systems.

D. Telephone and communication conduit systems shall have separate junction boxes and pull fittings.

E. Install fire system wiring in dedicated conduit system.

F. Finish openings so standard sized cover plates can be used. Oversized plates not allowed.

G. Mount wall switches 3’-6” (1,066 mm) above finished floor or grade unless specified otherwise. After circuits are energized, test wall switches for proper operation.

H. Outlets:
1. Standard mounting height: 18” (450 mm) above finished floor, unless specified otherwise.
2. Outlets outdoors, garages, basements, shops, storerooms, and other rooms where equipment may be hosed down: 4'-0" (1.2 m) above finished floor or grade.
3. Surface-mount welding receptacles 4'-0" (1.2 m) above finished floor or grade.
4. After circuits are energized, test each receptacle for correct polarity.
5. Test GFCI receptacles for proper operation.
6. Mount wall thermostats 5'-6" (1.6 m) above finished floor unless noted otherwise. Thermostats mounted shall be suitably insulated from wall temperatures.

I. Communication outlets shall be 18” (450 mm) above finished floor unless required otherwise. Outlets outdoors, garages, basements, shops, storerooms, and rooms where equipment may be hosed down shall be 4'-0" (1.2 m) above floor.

J. Clock outlets shall be located 7'-0" (2.1 m) above finished floor or grade.

3.07 GROUNDING AND BONDING

A. Electrical system and equipment grounding shall be installed in accordance with NEC and shall conform to following, where applicable:
1. Ground conductors shall be bare or green-insulated in accordance with NEC.
2. Cable shall be soft-drawn copper or copper bar, sized in accordance with drawings and NEC, but not smaller than No. 12 AWG.
3. Ground cable splices and joints inaccessible upon completion of construction shall meet requirements of IEEE 837 and shall be exothermic weld or compression system type.
4. Ground cable through exterior building walls not in conduit shall enter within 3’ (1 m) below finished grade and shall be provided with water stop.
5. Provide ground loop around building perimeter unless other ground grid configuration is indicated on drawings. Ground cable near base of structure shall be in undisturbed earth and approximately

3' (1 m) from structure. As a minimum, provide ground rods at each corners of building structure bonded to ground loop, ground rod spacing shall not exceed 100' (30 m).

6. Copper ground conductor in addition to conduit connection shall ground each piece of electrical equipment.
7. Copper or high-conductivity copper alloy ground lugs or clamps shall make ground connections to equipment and ground buses. Connections to enclosures not provided with ground buses or ground terminals shall be made by clamp-type lugs added under permanent assembly bolts or under new bolts drilled and added through enclosures other than explosionproof, or by grounding locknuts or bushings. Ground cable connections to anchor bolts; against gaskets, paint, or varnish; or on bolts holding removable access covers not permitted.
8. Bond grounding system to non-cathodically protected metallic water piping by connection to first flange inside building from main that will form good ground connection. Make connection with copper bar or strap by drilling and tapping flange and providing bolted connection. Do not bond grounding system to cathodically protected pipes.
9. Ground conductors on equipment shall be formed to contour of equipment and firmly supported.
10. Ground rods not described elsewhere shall be minimum 3/4" (19 mm) diameter by 10' (3.0 m) long, with copper jacket bonded to steel core.
11. Make connections to ground grid where shown on Drawings.
12. Verify connections by performing continuity checks.

3.08 FIREPROOFING AND FIRE RATINGS

A. Maintain fire-resistive integrity during construction.

B. Penetrations through fire-resistive structures shall be sealed with fire-resistive material compatible with construction penetration.

C. Where required by codes, local building officials, or fire marshal, furnish UL fire sealing systems and install in accordance with manufacturer's recommendations.

3.09 STARTUP AND TESTING

A. Clean equipment interiors and exteriors prior to start-up and testing.

B. Unless specified otherwise, tests performed shall be standard tests listed by ANSI/IEEE for intended equipment.

C. Equipment shall be checked and placed in service ready for operation.

D. Circuits shall be electrically tested after installation. Test power and motor circuits prior to final connection to equipment. Splices shall be complete prior to testing.
   1. Provide equipment and labor required for testing.
   2. Circuit failing to test satisfactorily shall be replaced or repaired, and retested at no additional cost to Owner.
   3. Check power and motor circuits, dc power, and control circuits for:
      a. Correct terminations.
      b. Continuity.
      c. Unintentional shorts and grounds.
   4. Check power conductors for correct phasing.
   5. Motor circuits shall be checked for proper rotation and motors "bumped" to verify correct machine rotation.
   6. Control, instrumentation, and thermocouple wire shall be checked for correct termination, continuity, freedom from shorts or grounds, and identification.
   7. Current transformer wiring shall be loop checked by injecting current at one end of loop and checking with clip-on ammeter at each field termination point to assure continuity and phase identification.
   8. Voltage transformer wiring shall be tested by applying voltage at one point and checking with voltmeter phase rotation meter and phase angle meter at each field termination point to assure continuity, identification and phase shift.

3.10 DEMONSTRATION

A. Final start-up and check out shall be completed prior to Owner acceptance of project.

B. Electrical installation shall be complete in every detail and capable of normal operation in presence of Owner or Owner's Representative to verify its readiness.

3.11 SEISMIC REQUIREMENTS

A. Provide equipment, material, and installation in accordance with seismic requirements as indicated on Data Sheets.

DATA SHEETS			
DESCRIPTION	**UNITS**	**SPEC DATA**	**VENDOR DATA**
SITE CONDITIONS			
Seismic Requirements			
Site Class		D	
S_{DS} – Design Spectral Ground Acceleration at Short Periods (0.2 seconds)		0.109g	
I_p – Component Importance Factor		1.25	
R_p – Structure Response Modification Factor		2.	
a_p – Component Amplification Factor Refer to Table 13.6-1 of ASCE 7-10		By Manufacturer	
Specific local Building Code and specific sections on seismic requirements used in equipment design	---	By Manufacturer	

END OF SECTION

1) J. N. Gavin
2) L. E. Ingram

PART 1 GENERAL

1.01 SECTION INCLUDES

A. Low-voltage, 3-phase, fractional and integral horsepower induction electric motors 1/2 to 50 hp.

1.02 WORK BY OTHERS

A. Motor foundations and foundation anchor bolts.

B. Receiving, unloading and storing of motors.

C. Final placement and assembly.

D. Power, control, and grounding connections.

1.03 ACTION SUBMITTALS

A. Shop Drawings:
1. Complete and accurate Data Sheets.
2. General description and technical data cut sheets.
3. Certified outline drawings that include dimensions, weight, lifting points, center of gravity, enclosure construction, and location of accessories.
4. Recommended long term and short term storage requirements and procedures.
5. List of recommended start-up and spare parts for each type of motor, including bearings.

1.04 CLOSEOUT SUBMITTALS

A. Manufacturer's operation and maintenance manuals. Provide, at minimum:
1. Final reviewed set of drawings listed above.
2. Operating and maintenance procedures.
3. Warranty information.

1.05 QUALITY ASSURANCE

A. Manufacturer's qualifications:
1. Manufacturer shall manufacture major components of motor and shall be ISO certified.
2. Manufacturer shall have produced similar equipment for minimum period of 5 years.

B. Regulatory requirements:
1. Motors shall be in accordance with applicable requirements of NEMA MG-1, NFPA 70, IEEE 112, and UL 1004.
2. Standards of foreign organizations shall not be used without written approval from Engineer.

1.06 DELIVERY, AND HANDLING

A. During delivery and handle equipment to prevent damage, denting, or scoring.

B. Ship equipment to job Site for installation.

PART 2 PRODUCTS

2.01 MANUFACTURERS

A. Baldor.

B. Lincoln Motors.

C. Marathon.

D. Reliance.

E. U. S. Motors.

2.02 SYSTEM DESCRIPTION

A. Furnish motors either separately or as integral part of mechanical system. Motor horsepower and torque characteristics shall be coordinated with driven piece of equipment by manufacturer.

B. Motor rated power shall exceed driven equipment maximum load by 15% unless otherwise agreed by Owner. Service factor shall not be considered in this calculation.

2.03 ENCLOSURE SYSTEM

A. Provide weather enclosure and cooling class type as specified on Data Sheet. Furnish motors with frames 182T and above with lifting eyes arranged so lifting slings do not become entangled in accessories mounted on motor.

B. Treat materials potentially exposed to process fluids with rust preventing compounds such as Cosmoline, Rust-Veto, or equal.

C. Do not use copper or copper alloy for air coolers.

D. Bolts and nuts exposed to environment shall be of galvanized steel.

2.04 VOLTAGE AND FREQUENCY

A. Motors shall be capable of operating within design characteristics for system source voltage as specified on Data Sheets.

B. Design motors for full-voltage, across-the-line starting unless specified otherwise.

2.05 CHARACTERISTICS

A. Torque characteristics shall conform to standard NEMA design letter designation and shall be appropriate for mechanical load served. Motor speed and rotation shall be that required by the driven equipment. Motors shall have torque characteristics adequate to “break away” driven load and to accelerate load to rated speed in length of time that is at least 2 seconds less than the hot locked rotor thermal damage time of motor.

B. Motor locked-rotor current shall not exceed 650% of full load current.

C. Efficiency at rated load shall meet or exceed NEMA Premium efficiency levels.

2.06 MOTOR FRAME

A. Type: Heavy-duty, using cast iron or welded steel construction.

B. Machine sealing parts to high-accuracy to minimize breathing.

C. If specified for hazardous areas, motors shall be enclosed and UL-listed for class, division, and group designation in accordance with NEC Article 500.

D. Motor frame, end brackets, fan covers, drip shields, and bearing housing shall be corrosion-resistant. Motor supporting feet shall be an integral part of frame.

E. Provide motors with stainless steel replaceable automatic drainage fittings. Locate drain holes at low point of motor in final mounted position.

F. Drill and tap for ground lug connection. Locate bolt holes on motor frame, external to, and on same side as terminal box. Provide hole size as follows:
   1. Motors up to 50 hp: 1/4-20 unified inch coarse thread (UNC).
   2. Motors over 50 hp and up to 200 hp: 3/8-16 UNC.
   3. Motors over 200 hp: 1/2-13 UNC.

G. For interchangeability, multiple motors provided as part of same system or on same piece of equipment shall have similar motor frame sizes to minimize number of different frame sizes and associated mounting dimensions.

H. Mount motor on equipment skid and provide provisions for alignment adjustments and belt tightening. Motor shall be factory mounted and aligned to equipment prior to shipment.

2.07 STATOR AND STATOR ASSEMBLY

A. Insulation: Multiple dips and bakes of insulating varnish.

B. Windings shall be copper.

C. Windings shall be random-wound coils with class of insulation as stated on Data Sheets.

2.08 ROTOR AND SHAFT ASSEMBLIES

A. Motor shaft shall be machined, carbon steel capable of transmitting torque produced by motor.

B. Rotor cage shall be fabricated aluminum, or integrally die-cast aluminum.

C. Rotor shall be epoxy-coated.

D. Dynamically balance motors by one of following means:
   1. Drilling out parent metal in such a manner that structural strength of rotor is not weakened.
   2. Use balance washers securely pinned in place.
   3. Chiseling, sawing, or use of solder or similar deposit materials to achieve balance is not acceptable.

2.09 BEARINGS

A. Anti-friction type bearings shall be grease lubricated and have minimum rated life L10 with a median life no less than 50% of L10 life, as defined by ABMA. Reliability of each bearing shall be greater than 90%.

B. Ball bearings shall be vacuum-degassed steel, motor quality.

C. Construct and provide bearing and bearing housing seals to prevent dirt or moisture from entering motor.

D. Provide interior bearing caps or other suitable means to prevent lubricant from entering motor.

E. Integrally cast bearing supports as part of motor end bell. Rabbet end bell to stator assembly to ensure proper bearing alignment and air gap spacing.

F. Design bearings so damage does not occur by axial rotor movement during motor startup and shutdown.

G. Shaft and bearings for belt-connected motor shall withstand normal belt pull of equipment furnished and momentary and continuous overloads due to acceleration caused by incorrect belt tension.

H. Bearings for motors driving vertical pumps, including in-line pumps, shall be designed to carry 200% of maximum thrust, up and down, that pump develops during starting and stopping, and while operating at any capacity on rated performance curve.
   1. Minimum momentary up-thrust capacity shall be equal to 30% of down-thrust at rated capacity.
   2. Thrust bearings for in-line pump motors shall be the motor non-drive end bearing.

I. Motors rated 100 hp and above for nonVFD applications shall have non-drive end bearing insulated to prevent against circulating shaft current.

J. Motors shall have metallic bearing isolators on each bearing.

K. Furnish vertical motors coupled to vertical pumps with non-reversing ratchets and bolted couplings with case drip shields.

2.10 LUBRICATION SYSTEM

A. System shall be capable of operating at least 8,000 hours without requiring addition of grease or complete change of grease.

B. Provide system with readily accessible grease inlet and outlet plugs in bearing housings to enable regreasing while motor is in service.

2.11 FANS

A. Fan material shall be nonsparking bronze alloy or conductive plastic. Aluminum, bronze, copper, or copper alloy not acceptable.

2.12 SPACE HEATERS

A. Provide low surface-temperature space heaters for motors installed outdoors, and motors rated 25 hp or larger installed indoor or outdoor. Mount on inside of motor frame or winding end turns.

B. Sheath temperature at 110% of rated voltage, when operating at ambient temperature, shall not exceed 200°C or cause motor insulation temperature to exceed 130 °C, whichever is more restrictive.

C. Space heaters shall be rated and designed to operate at voltages as specified on Data Sheets. Space heaters shall be suitable for installation in hazardous areas as defined by NFPA, if motor is specified to be installed in a hazardous area.

D. Route space heater power leads to dedicated terminal box for control and space heater leads.

2.13 MOTOR TERMINAL BOXES

A. Equip each motor with terminal boxes.

B. Size motor lead terminal box to allow for bending radius and stiffness of motor supply cables, and for terminating grounding conductor.
   1. Frame size 445T and below: Cast iron terminal box shall be at least twice usable volume specified in NEMA MG-1, and not less than 24 in^3 (393.3 cm^3).
   2. Frame size exceeding 445T: Cast iron, cast steel, or steel plate terminal box sized according to NEMA MG-1, Figure 20-3.

C. Motor leads shall have brass or stainless steel ferrules embossed with appropriate lead number, or leads imprint with lead number. Tagging of main leads shall be in accordance with MG-1, Part 2.

D. Fit motor terminal box with neoprene gaskets.

E. Main terminal boxes shall be capable of rotation in 90° increments to permit connection on any one of four sides.

F. Provide motor lead seal and separator gasket between motor frame and terminal box.

G. Provide main terminal boxes with threaded conduit entrances.

H. Motor leads shall have oil-resistant insulation.

I. Terminate main lead electrical connections with tinned lugs.

2.14 IDENTIFICATION AND TAGGING

A. Securely attach embossed or stamped, stainless steel nameplates with stainless steel screws or pins.

B. Nameplate shall contain standard information in accordance with NEMA MG-1 40.1 and as follows:
1. Year of manufacture.
2. Type of bearing lubricant and specification number.
3. Arrow indicating direction of rotation for main lead connections.
4. Bearing type and manufacturer's part number.

C. If identification number cannot be included on motor nameplate, provide separate stainless steel equipment identification nameplate in accordance with equipment identification as provided by Owner.

D. Motor power and space heater circuits may be derived from different sources. Covers of motor terminal boxes containing space heater leads shall be provided with nameplate reading: "ISOLATE MOTOR AND HEATER CIRCUITS BEFORE REMOVING COVER".

2.15 VARIABLE SPEED MACHINES

A. Motors defined on the Data Sheet for variable speed application shall be inverter duty rated and operated over the speed range defined.

B. Provided motors with external cooling fans to force cool the machine if the operational speed range defined on Data Sheet reduces integral fan performance below required levels to maintain maximum temperature rise.

C. Electrically insulate both drive end and nondrive end bearings.

PART 3 EXECUTION

3.01 INSTALLATION

A. Install in accordance with manufacturer's recommendations.

B. Motors furnished with space heaters shall have heaters connected to temporary source of power capable of being monitored during storage.

C. Maintain temporary power until motors are installed in final position and normal power source is permanently energized.

D. Store motors and components in clean, dry place. Protect from weather, dirt, water, construction debris, and physical damage in accordance with manufacturer's instructions.

E. After machine is installed into final location but before startup, maintain motor space heaters electrical supply.

F. Bump motor for proper rotation and run motor uncoupled from mechanical load for a minimum of 20 minutes prior to coupling to load.

END OF SECTION

1) J. N. Gavin
2) L. E. Ingram

PART 1 GENERAL

1.01 SECTION INCLUDES

A. Above grade conduit, wireway, boxes, and associated accessories for support, securing, and protection of electrical wiring.

1.02 INFORMATIONAL SUBMITTALS

A. Product Data:
1. List of proposed materials identifying manufacturer and type to be furnished.
2. Manufacturer's catalog sheets, marked as necessary to indicate specific type, model or catalog number for equipment to be furnished for project.

B. Quality assurance data:
1. Component and accessories data sheets.
2. Installation information.

C. Such other similar information as Engineer may request.

1.03 QUALITY ASSURANCE

A. Manufacturer’s qualifications:
1. Manufacturer shall be manufacturer of major components within assembly and shall be ISO certified.
2. Manufacturer shall have produced similar equipment for a minimum period of 5 years.

B. Regulatory requirements
1. Equipment shall be designed and manufactured in accordance with applicable requirements of following: NFPA 70; NEMA C80.1, C80.3, C80.5*;* UL 1, UL 6, UL 360, UL 651, UL 797, UL 870, UL 1242; and NEMA TC2, TC3, TC6 & 8, TC9, and RN1.
2. Standards of foreign organizations shall not be used without written approval from Engineer.

PART 2 PRODUCTS

2.01 SYSTEM DESCRIPTION

A. Raceway systems and accessories shall include, but not be limited to:
1. Exposed and concealed conduit.
2. Elbows, fittings, and accessories.
3. Hardware for support, securing, and protection.
4. Wireways.

2.02 RIGID METAL CONDUIT, STEEL (RGS)

A. Material: Mild steel tube with continuous welded seam in accordance with NEMA C80.1, and UL 6.

B. Exterior and Interior protective coating: Metallic zinc applied by hot-dip galvanizing or electro-galvanizing. Apply final coat of transparent zinc chromate to exterior. Exterior and interior coatings applied to conduit shall afford sufficient flexibility to permit field bending without cracking or flaking.

C. Thread pitch shall conform to ANSI/ASME B1.20.1. Taper shall be 3/4”/ft (62.5 mm/m).

D. Each length of conduit shall have UL listing label.

E. Couplings, unions, and fittings: Threaded-type, galvanized steel.

F. Conduit bodies: Threaded or threadless type, cast metal or malleable iron type with zinc or cadmium coating. Covers shall have solid gaskets and captive screw fasteners.

G. Running thread not acceptable.

2.03 RIGID METAL CONDUIT, STEEL, POLYVINYL CHLORIDE COATED (PVC-RGS)

A. Requirements of article ”Rigid Metal Conduit - Steel (RGS)” shall apply.

B. Coating: Apply minimum 40-mil, gray polyvinyl chloride (PVC) coating over exterior and apply urethane coating uniform and consistent to interior of conduit. Internal coating shall be nominal 2 mil thickness. Conduit having areas with thin or no coating, not acceptable. Protect conduit threads by urethane coating. PVC coating shall have been investigated by UL as providing primary corrosion protection for rigid metal conduit.

C. Fittings, and conduit bodies: Threaded type, PVC-coated. PVC coating on outside of conduit couplings shall have series of longitudinal ribs, 40 mils in thickness, to protect coating from tool damage during installation. Manufacturer of couplings, fittings, and conduit bodies shall be same as conduit manufacturer. Hazardous location fittings shall be manufactured prior to application of plastic coating, and shall be UL-listed.

D. PVC exterior and urethane interior coatings applied to conduit shall afford sufficient flexibility to permit field bending without cracking or flaking at temperatures above 30°F (-1°C).

2.04 RIGID METAL CONDUIT, ALUMINUM (RAC)

A. Material: Aluminum alloy No. 6063-T1 in accordance with NEMA C80.5, and UL 6A.

B. Fittings: Threaded type, aluminum alloy containing not more than 0.40% copper.

C. Conduit bodies: Threaded or threadless type, fabricated from aluminum alloy or cadmium-plated malleable iron. Covers shall have solid gaskets and captive screw fasteners.

D. Running thread not acceptable.

2.05 FLEXIBLE EXPLOSIONPROOF COUPLINGS

A. Material: Brass or stainless steel.

B. Construction: Liquidtight rugged design to withstand explosive pressure, mechanical abuse, wire duct liner.

C. Fittings: Two threaded male end fittings or one female union and one male threaded end fitting.

2.06 LIQUIDTIGHT FLEXIBLE METAL CONDUIT (LFMC)

A. Material: Mild steel, galvanized.

B. Construction: One continuous length steel strip of uniform weight and thickness and shaped in interlocking convolutions; fabrication shall result in smooth interior surface.

C. External coating: Provide outer jacket of tough extruded polyvinyl. Jacket shall be positively locked to steel core and be sunlight resistant and listed as oil resistant.

D. Continuous integral grounding strip: Required in sizes 1-1/4” (31 mm) and smaller. Ground wire shall be required for larger sizes.

E. Fittings: Cadmium or zinc-plated steel or malleable iron. Compression type with tapered hub and synthetic rubber gasket and ground ferrule for making positive ground contact with steel core, designed to prevent outer jacket from pulling away from steel core. Connectors shall have insulated insert in throat. Suitable for grounding through 1-1/4" (31 mm) trade size, provide ground wire lug for sizes 1-1/2" (38 mm) and larger.

2.07 RIGID NONMETALLIC CONDUIT, POLYVINLY CHLORIDE (PVC)

A. Material: PVC Schedule 40, and Schedule 80. Schedule 40 shall be rated for above-grade installation.

B. Fittings, elbows, and accessories: Connect to conduit by solvent-type cement process. Material shall be same as conduit.

C. Transition for connection of plastic conduit to rigid metal conduit shall be threadless solvent-type cement connection to PVC, with threaded connection to rigid metal conduit.

2.08 PULLBOXES AND JUNCTION BOXES

A. General use areas, protected or indoor: Galvanized sheet steel with a metal thickness meeting UL 50. Provide removable covers attached with round head silicon bronze machine screws.

B. Process or wet locations, indoor or outdoor: Galvanized steel or aluminum with gasketed covers attached with stainless steel hardware using raintight hubs.

C. Hazardous areas: UL-approved for area classification.

D. Where required for elbows, fittings, and accessories to be furnished by same manufacturer as conduit, boxes shall also be furnished by conduit manufacturer or by supplier approved by manufacturer.

2.09 WIREWAY

A. Metal gage thickness shall conform to NEC.

B. NEMA 3R: Minimum 16-gage galvanized steel with baked enamel finish, gasketed drip-shield cover, with stainless steel screws, weatherproof.

C. NEMA 4X: Minimum 14-gage Type 304 stainless steel with neoprene gasket, hinged cover, stainless steel external screw clamps, and external mounting tabs.

D. NEMA 12: Minimum 16-gage steel with baked enamel finish with gasketed, hinged cover with stainless steel screws, dust-tight.

E. Screws shall be guarded to prevent damage to wire installation.

F. Provide fittings, supports, end plates, and accessories as required.

PART 3 EXECUTION

3.01 INSTALLATION - GENERAL

A. Coordinate timing of installation and locations of raceway with other trades. Do not block access or impede construction.

B. Locations of above grade raceway indicated on Drawings are approximate. Coordinate actual locations in field to avoid conflicts with other equipment.

C. Areas designated for, but not limited to; access, maintenance, hatchway, tube removal, and expansion shall be kept clear of field-routed raceway.

D. Exposed raceway runs shall be installed parallel or perpendicular to dominant surfaces with right-angle turns made with symmetrical bends or fittings.

E. Install exposed raceway minimum of 6" (150 mm) from outside surface of insulation and lagging on hot water pipes, steam pipes, and other heat sources. Install minimum of 12" (300 mm) from uninsulated heat sources. Avoid long runs parallel to heat sources.

F. Use expansion fittings where necessary. When expansion or deflection will be greater than 6" (152 mm) or greater than fitting is designed to accommodate, provide junction boxes solidly mounted on each side of expansion joint and connect with flexible, liquidtight conduit, or adjust conduit sections to limit expansion to less than 6" (152 mm).

G. Support raceway independently from equipment, and temporary or movable structures.

H. At minimum, identify raceways at both ends with raceway numbers. Markers shall be adhesive, UV-resistance type with 1" (25 mm) high lettering.

3.02 USES AND LIMITATIONS

A. Refer to NEC for guidelines regarding use, and limitation of each type of conduit. Follow NEC except as specified otherwise herein, or as shown on Drawings.

B. PVC-RGS: Acceptable for corrosive areas. Install conduit system in accordance with manufacturer's installation manual. Installer shall be certified by manufacturer to install coated conduit.

C. LFMC: 1/2" (13 mm) minimum size; 5' (1.5 m) maximum length.

D. RTRC: Use in such installations as, but not limited to, petrochemical, wastewater, chemical, pulp and paper, bridges, tunnels, docks, piers, and cooling tower and vicinity. May be used in other locations with approval from Engineer.

3.03 RIGID CONDUIT

A. Conduits not shown on Drawings shall be sized in accordance with NEC.

B. Conceal conduit in finished areas.

C. Drainage: Avoid water pockets in conduit runs; provide suitable fittings at low spots in exposed conduit where pockets cannot be avoided. Weep holes not permitted in conduit.

D. Conduit ends:
   1. Cap spare conduits with fittings designed for intended use.
   2. Conduit terminating in panels or enclosures where exposed to entrance of foreign material shall be plugged with commercial duct-sealing compound around conductors.
   3. Cap conduit ends during construction to prevent entrance of foreign material.

E. Where practicable, provide 3" (75 mm) stubbed up conduit for conduit entering into bottom of freestanding equipment. Coordinate locations with equipment. Terminate with grounding bushings.

F. Clean and swab inside of conduit by mechanical means to remove foreign materials and moisture before wires or cables are installed. Cleaning method shall not damage interior surface of conduit.

G. Bushings: Provide at termination of conduit not terminated in hubs and couplings. Insulating bushings with 150°C rated insulating inserts in metal housings shall be provided on conduit 1-1/4" (31 mm) and larger. Insulating bushings shall be grounding type. Standard bushings shall be galvanized.

H. Apply coat of zinc chromate to zinc-coated conduits where protective coating is damaged.

I. Couplings and unions:
   1. Threaded conduit couplings shall join metal conduit with conduit ends butted. Where standard threaded couplings cannot physically be used, join metal conduit using conduit unions or split couplings.
   2. Use ground-seat type, watertight unions where union may be submerged.
   3. Install coupling nut in upper-most union to prevent entrance of water into union when used in vertical or inclined conduit runs.

J. Bends: Run of conduit shall not contain more than equivalent of three 90º bends, including offsets at outlets or fittings. Use only manufacturer-approved conduit bending equipment. Do not use deformed or crushed conduits.

K. Threads: Cut ends of conduit with saw; do not use wheel cutter. Conduit end shall have same number of threads as present from factory. Apply coat of zinc chromate to steel conduit threads and apply anti-seize compound containing powdered zinc or lubricating graphite to aluminum conduit threads.

L. Use expansion joints as required such that no more than 6” (152 mm) allowance for expansion or contraction of conduit occurs.

3.04 FLEXIBLE CONDUIT

A. Connect equipment that moves due to vibration, normal operation of mechanism, or thermal expansion, in relation to supported conduit using flexible conduit. Install junction boxes as required. Provide green ground wire.

B. Flexible metal conduit 1-1/2” (38 mm) and larger shall be installed with external lugs and external grounding conductor.

3.05 SPECIAL FITTINGS

A. Hazardous areas:
   1. Rigid conduit shall be used in areas designated as Class 1 areas classified as hazardous locations in accordance with NEC.
   2. Explosion proof flexible couplings where a flexible member is required in a conduit system to accomplish difficult bends or to allow for movement or vibration of connected equipment.

B. Fittings installed outdoors or in damp locations shall be weathertight. Outdoor fittings shall be of heavy-duty construction.

3.06 CONDUIT SUPPORTS

A. Supports of structural steel or manufactured framing members shall be fabricated from lightweight stainless steel channel approved by manufacturer for intended use, provide required rods, anchors, inserts, clamps, spacers, shims, bolts and accessories.

B. Clamps: Stainless steel iron 1-hole straps, beam clamps, or other device with necessary bolts and expansion shields.

C. Adjustable hangers: Use to support horizontal runs only. Use trapeze-type supports for parallel runs of conduit. Install U-bolts at end of each run and at each elbow. Install conduit clamps every third intermediate hanger for each conduit. Hanger rods shall be 3/8” (10 mm) minimum diameter threaded stainless steel rods.

D. Conduits supports mounted on concrete surfaces: Fasten with self-drilling tubular expansion shell anchors with externally split expansion shells, single cone expanders, and annular break-off grooved chucking cones.

3.07 PENETRATIONS

A. Provide required penetrations in floors, walls, or roofs. Penetrations shall be kept to minimum, as small as possible, and installed in neat manner. Surrounding surfaces damaged during installation of penetrations shall be included as part of this work.

B. Seal penetrations in walls, floors, ceilings, and enclosures. Provide fire stops for electrical raceway penetrations. Maintain original fire rating that existed prior to commencement of work. Do not install fire seal for wire openings until interconnecting wiring of equipment is proven to operate properly.

C. Sleeves:
   1. Provide for passage of conduits through walls, floors, or partitions. Set sleeves in masonry during construction; set sleeves through concrete before placement begins.
   2. Material: Rigid conduit or pipe securely fastened in position.
   3. Cut sleeve flush with floor where conduit enters equipment enclosure otherwise extend sleeve 3” (75 mm) above floor.
   4. Sleeves through exterior building walls: Install conduit in center of sleeve. Pack interior and exterior annular space around conduit with plastic backer rod sized to fit annular space in compression as recommended by backing manufacturer. Seal interior and exterior of joint with acrylic polymer sealant.
   5. Sleeves through waterproof construction shall be flanged type.

D. Penetrations required after walls, floors, or ceilings are constructed shall be provided and grouted or sealed. Openings shall be core-drilled, do not jackhammer.

E. Patch and finish openings made in existing walls and floors to match original material in composition and appearance.

F. Cut or punch penetrations in wall panels. External penetration shall be flashed and calked to provide weather tight seal.

G. Limit penetrations in roofs to applications where required for connection to specific piece of equipment. When required, flash and apply seal material after installation of conduit to provide weathertight bond and seal. Materials shall be compatible with roofing system.

3.08 WIREWAY AND BOXES

A. Installed in accordance with manufacturer's recommendations.

B. Connections shall be made such that they maintain NEMA rating of enclosure and system.

C. Locations and quantities shown on Drawings are approximate. Make adjustments as required to eliminate field interferences or to meet requirements of NEC. Provide Engineer with information regarding new locations.

D. To access interior, locate to permit full removal of covers, or such that doors can be opened more than 100°. Mount at height as indicated, or as required by NEC, whichever is more restrictive.

E. Support wireways and boxes independently of conduits by means of stainless steel bolts, screws, rod hangers, and other suitable means.

END OF SECTION

1) J. N. Gavin
2) L. E. Ingram

PART 1 GENERAL

1.01 SECTION INCLUDES

A. Low-voltage variable frequency drive (VFD) designed for use on 3-phase induction motor.

1.02 INFORMATIONAL SUBMITTALS

A. Product Data:
   1. Completed Data Sheets for each different drive provided. Identify any special accessories required to match with driven load.
   2. Complete list an accompanying data for any special equipment required for operation and maintenance of VFD.
   3. Receiving, storage, installation, and testing instructions.

B. Quality assurance data:
   1. Submittal document index and submittal schedule.
   2. Plots of typical efficiency vs. speed and torque curves.
   3. Harmonic analysis calculations specific to each installation showing total harmonic voltage and current distortion at PCC. Information to demonstrate that harmonic currents generated by drives will not cause power distribution system to experience harmonic distortion exceeding limits recommended by IEEE Standard 519. Describe product features and equipment furnished to meet harmonic distortion requirements of this Specification.
   4. Mean Time-to-Failure data.
   5. Standard production testing procedures for drives, certified factory test data and results after completion of factory testing.

1.03 ACTION SUBMITTALS

A. Shop Drawings:
   1. Certified outline, general arrangement, assembly, and installation drawings, that includes front view, dimensions, and weight.
   2. Elementary diagrams (3-line diagrams) and schematic control diagrams of complete VFD system showing terminal block terminations, device terminal numbers and internal wiring diagrams.
   3. Certified drawings of cable termination compartments showing preferred locations for conduit entry/exit locations and indicating space available for cable terminations.
   4. Nameplate drawing.

1.04 CLOSEOUT SUBMITTALS

A. Operation and maintenance manuals. Provide, at minimum:
   1. Final copies of documents listed above.
   2. Operating and maintenance procedures.
   3. Spare parts lists with pricing.
   4. Installation field reports and Data Sheets updated to reflect field installation conditions
   5. Copies of warranty.

1.05 QUALITY ASSURANCE

A. Design and manufacture according to latest editions of applicable NEMA, UL, NFPA, IEEE, and ANSI standards.

B. Manufacturer shall be ISO 9001 certified and shall have produced similar electrical equipment for minimum period of 5 years.

C. When requested by Engineer, provide acceptable list of similar equipment installations complying with requirements of this specification.

D. Completed drive shall be tested for at least 3 hours with induction motor connected.

1.06 DELIVERY, STORAGE, AND HANDLING

A. During delivery and storage, handle equipment to prevent damage, denting, or scoring.

B. Store equipment and components in clean, dry place. Protect from weather, dirt, water, construction debris, and physical damage in accordance with manufacturer's instructions.

PART 2 PRODUCTS

2.01 MANUFACTURERS

A. Allen Bradley Powerflex

2.02 SYSTEM DESCRIPTION

A. VFD shall convert incoming fixed frequency 3-phase ac power into variable frequency and voltage for controlling speed of 3-phase ac motor.

B. Motor voltage shall be varied with frequency to maintain desired motor magnetization current suitable for eliminating need for motor derating.

C. VFD shall be sinusoidal PWM type drive with sensor-less torque vector control capability. Control techniques other than PWM, not acceptable.

D. Components:
1. Full-wave diode rectifier to convert supply ac to fixed dc voltage.
2. Dc link capacitors.
3. Insulated Gate Bipolar Transistor (IGBT) power section, dual rated for either variable or constant torque applications.
4. VFD shall be microprocessor-based with LED and LCD display to monitor operating conditions.
5. Separate control and power terminal boards.

E. VFD shall be of modular construction for ease of access to control and power wiring, and maintenance.

F. Provide in NEMA 1 enclosure for use in normal, nonhazardous industrial environment.

G. Enclosure doors shall include electromechanical interlocking system with safety switch and electrical interlocks tied to main breaker. Whenever doors are open, safety ground switch shall connect plus, minus, and neutral dc buses to ground to ensure stored energy is discharged.

2.03 DESIGN REQUIREMENTS

A. Where manufacturer determines an input drive transformer, input filter, or output filter is required to meet installation requirements, they shall also be provided.

B. Point of Common Coupling (PCC) shall be defined as terminals on input side of circuit breaker directly feeding each individual drive.

C. Total Harmonic Distortion (THD) at each PCC shall not exceed 5%, as recommended for General Systems as listed in Table 10.2 of IEEE Standard 519.

D. Harmonic current distortion at PCC shall not exceed limits listed in Table 10.3 of IEEE Standard 519.

E. Design drive to provide 50,000 hours mean time between failures (MTBF) when specified preventative maintenance is performed.

F. Design motors furnished to meet NEMA MG1, Part 31 for VFD service.

G. Symbols shall conform to ANSI Y32.2/IEEE 315/CSA Z99.

H. Printed circuit boards shall be completely tested and burned-in, in accordance with UL347A before being assembled into completed VFD.

2.04 INPUT POWER

A. System shall be capable of maintaining rated torque and speed with bus voltage deviations of ±10% and frequency deviations of ±5%.

B. Line notching, transients, and harmonics on incoming line shall not affect VFD performance.

C. Below 70% bus voltage, motor will be allowed to coast. If bus voltage is restored within 2 seconds, system can be started, if selected. If bus voltage is not restored within 2 seconds, system shall be automatically shut down. Automatic or manual restart shall be selectable from control panel.

D. VFD shall have provisions for input line reactor to be incorporated into VFD enclosure.

E. Drive efficiency shall be 95% or higher at rated load.

2.05 OUTPUT POWER

A. Operating mode:
   1. Frequency at 60 Hz and below: Constant volts per Hz mode.
   2. Above 60 Hz: Selectively operate in either constant volts per Hz mode or constant voltage extended frequency mode.

B. Rated output voltage: Programmable for either 80 to 240 volts or from 320 to 480 volts depending on 3-phase motor nameplate rating.

A. VFD shall be capable of minimum of 110% of rated full-load current in continuous operation, in accordance with NEC Table 430.250.

2.06 OPERATING RANGE

A. Speed range: 6 to 60 Hz. Both minimum and maximum speeds shall be field-adjustable.

B. VFD shall not have electrical resonance within operating speed range.

C. VFD shall be able to speed search and immediately pick up spinning motor in either forward or reverse direction.

2.07 TORSIONAL REQUIREMENTS

A. VFD, motor, and equipment load shall not develop adverse speed dependent oscillations.

2.08 NOISE

A. Drive shall not cause motor audible noise to increase more than 3 dB at 3' (1 m) above rated noise level for operation on full voltage starter.

2.09 MINIMUM DISPLACEMENT POWER FACTOR

A. PF 0.90 lagging, or higher, at any speed or load without use of power factor correction capacitors.

2.10 HARMONICS MITIGATION

A. Provide output filters, as required, such that motor insulation will not be damaged.

B. If additional equipment is necessary to meet IEEE 519 requirements, it shall be through use of one or more of following:
   1. Input isolation transformer.
   2. Input line reactor.
   3. Input harmonic trap filter with series reactor.
   4. Higher pulse rectifier.
   5. Mirus filter.
   6. Dc link reactor.

C. Drive manufacturer shall select and approve equipment provided.

2.11 DRIVE CONTROL

A. VFD shall use control strategy that maximizes efficiency, performance, and power factor while minimizing motor heating.

B. Drive regulator and control: Digital microprocessor design with following functions:
   1. Speed regulation.
   2. Current regulation.
   3. Load angle regulation.
   4. Drive protection.
   5. Drive diagnostics.
   6. System sequencing.

C. VFD regulator and control functions shall be stored on nonvolatile memory.

D. Drive shall have minimum of 3 programmable prohibited frequency ranges with adjustable span of 0 to 10 Hz.

E. Provide drive with local and remote controls:
   1. Mount HIM on the front of the control cabinet for local control.
   2. Remote operation will be by the PLC via Ethernet.

F. Operation:
   1. Switch in “Local” position: Drive shall operate at speed set by HMI
   2. Switch in “Remote” position: Drive shall be remotely controlled. Local HMI shall have no effect on operation.
      a. Speed control shall regulate motor speed corresponding to remote speed signal.
      b. When incoming signal is varying, rate of change of motor speed shall be limited by pre-selected acceleration/ deceleration rate.
      c. Drive shall be programmable to either run at constant speed as determined by minimum speed setting, last signal, preset speed, or to shut down, upon loss of speed signal. Remote speed signal falling below lower limit of range shall also be considered as loss of speed signal. Loss of remote speed signal shall be alarmed.
      d. If remote speed signal is above range upper limit, drive shall run at speed corresponding to upper limit.
      e. Alarms and indication:
         1) Loss of remote speed signal shall be alarmed.
         2) Drive failure alarm.
         3) Drive fault alarm.
         4) Drive in remote and local control indication.
         5) Drive running indication.

G. Following shall be available locally either on control panel display and remotely through communication interface:
   1. Drive ready.
   2. Drive running.
   3. Current, amps.
   4. Line-line voltage, volts.
   5. Output horsepower, hp.
   6. Speed, rpm.
   7. Frequency, Hz: Digital readout.
   8. Drive alarm conditions.
      a. Missing run or start permissive.
      b. Low control voltage.
      c. Microprocessor problem.
      d. I/O addressing problem.
      e. Loss of speed reference.
      f. Common trouble alarm.
   9. Drive fault conditions requiring immediate attention, and may indicate impending shutdown of drive.
      a. Source undervoltage.
      b. Source overvoltage.
      c. Source loss of phase.
      d. Source reverse phase sequence.
      e. Load overcurrent.
      f. Overspeed.
      g. Ground fault.
      h. Dc Link overvoltage.

H. Provide communications interface for remote monitoring and control of VFD using Ethernet communications.

2.12 DRIVE DIAGNOSTICS

A. Provide comprehensive diagnostics for maintenance and troubleshooting including:
   1. Self-test of microprocessor drive control system.
   2. LED indicators for status indication on control boards.
   3. Convenient maintenance test points.

2.13 COOLING

A. Provide integral filtered ambient air cooling by natural convection or forced air cooling system as required to maintain drive equipment at its full current rating.

2.14 IDENTIFICATION AND TAGGING

A. Securely attach nameplates with self-tapping stainless steel screws. Adhesive nameplates not acceptable.

B. Lettering shall be black on white background.

PART 3 EXECUTION

3.01 PREPARATION

A. Clean interior and exterior of equipment prior to placing into service. Debris shall be removed and appropriately discarded.

3.02 INSTALLATION

A. Install in accordance with manufacturer’s recommendations.

B. Perform manufacturer’s recommended start-up and commissioning tests prior to placing into service.

C. Correct deficiencies with VFD and other furnished equipment until system operates as required for installed equipment, at no cost to Owner.

D. Refinish marred spots to match original finish.

DATA SHEETS LOW VOLTAGE VFD		Equipment Name: Tag No.: REV. #	
DESCRIPTION	**UNITS/ OPTIONS**	**SPEC DATA**	**VENDOR DATA**
Manufacturer	N/a	ALLEN BRADLEY	
Catalog/Serial No.	N/a	POWERFLEX	
General:			
Driven Equipment	-	PUMP	
Motor NEMA Design	NEMA	Design B	
Nominal Operating Voltage	V	480	
System Operating Frequency	Hz	60	
Motor Nameplate Voltage	V	460	
Motor Nameplate Horsepower	Hp		
Cable information:			
Power Cable Incoming Location	Top/Bottom	BOTTOM	
Power Cable Exit Location	Top/Bottom	BOTTOM	
Maximum Expected Cable Length	ft	50	
Site information:			
Maximum Ambient Temperature	°F	120	
Minimum Ambient Temperature	°F	32	
Design:			
Rectifier Type	-	PWM	
No of Pulses, Minimum			
THD at Point of Common Coupling (PCC)	%	5%	
Available Short Circuit Current at PCC	kA	65	
Mean Time Between Failure (MTFB), Minimum	Hrs	50,000	
Maximum Input Voltage Variation	%	+/- 10	
Maximum Input Frequency Variation	%	+/- 5	
Drive Efficiency, Minimum	%	95	
Displacement Power Factor, minimum	pu	0.9	
Programmable Output Voltage Range	V -V	320 – 480	
Overvoltage Capability of System Voltage, Min.	%	110	
Speed Range	Hz -Hz	6 – 60	
Minimum Programmable Prohibited Freq. Ranges	Qty	3	
Prohibited Freq. Range Span	Hz - Hz	0 – 10	
Enclosure:			
NEMA Rating	NEMA	1	
Dimensions	L x W x H	By Manufacturer	
Weight	lbs	By Manufacturer	
Cooling Method	Air/Water	By Manufacturer	
Controls:			
Local /Remote Switch	Y/N	Y	
Start and Stop Push Buttons	Y/N	Y	
Local Speed Reference Potentiometer/Adjustment	Y/N	Y	
Programmable Speed Setting	Y/N	Y	
Local LCD or LED Readout Panel	Y/N	Y	
Local and Remote Alarm Indication	Y/N	Y	
Monitoring of VFD Fault Conditions	Y/N	Y	
Communication Interface	-	Ethernet TCP/IP	

DATA SHEETS LOW VOLTAGE VFD		Equipment Name: Tag No.:	REV. #
DESCRIPTION	**UNITS/ OPTIONS**	**SPEC DATA**	**VENDOR DATA**
Accessories:			
Input Isolation Transformer	Y/N	By Manufacturer	
Input Line Reactor	Y/N	By Manufacturer	
Input Harmonic Filter Trap with Series Reactor	Y/N	By Manufacturer	
Output Filter	Y/N	By Manufacturer	
Mirus Filter	Y/N	By Manufacturer	
DC Link Reactor	Y/N	By Manufacturer	
Special Accessories Required:	Y/N	By Manufacturer	

END OF SECTION

1) J. N. Gavin
2) L. E. Ingram

PART 1 GENERAL

1.01 SECTION INCLUDES

A. Preparation of subgrade to receive topsoil.

B. Placing topsoil.

C. Finish grading.

PART 2 PRODUCTS

2.01 TOPSOIL

A. Topsoil supply:
   1. Supply topsoil as necessary.
   2. Use topsoil stockpiled on Site. Supply topsoil necessary in addition to that stockpiled.

B. Imported topsoil: Natural, friable loam typical of productive soils in locality, capable of sustaining vigorous plant growth, from well drained site free of flooding, not in frozen or muddy condition, not less than 2% organic matter, and pH value of 5.9 to 7.0. Free from subsoil, slag, clay, stones, lumps, live plants, roots, sticks, foreign matter and any material that may be harmful to plant growth.

C. Existing topsoil: Natural, fertile soil capable of sustaining vigorous plant growth, not in frozen or muddy condition. Free from subsoil, slag, clay, stones, lumps, live plants, foreign matter, and any material that may be harmful to plant growth.

PART 3 EXECUTION

3.01 SUBGRADE PREPARATION

A. Preparation shall not start until outside construction Work has been completed.

B. Protect existing underground improvements from damage.

C. Scarify subgrade to a depth of at least 4" (100 mm) by disking, harrowing, or other method. Surface shall be left rough to provide a good bond with topsoil.

D. Remove roots, clods, stones, and any other debris larger than 2" (50 mm) in any dimension from surface.

3.02 PLACING TOPSOIL

A. Place topsoil on graded areas to be turfed, and as indicated on Drawings.

B. Spread evenly, shape, and firm topsoil to a minimum depth of 6" (150 mm). Do not spread topsoil when topsoil or subgrade is frozen, or when excessively wet or dry.

C. Thoroughly till soil to a minimum depth of 4" (100 mm) by roto-tilling, disking, harrowing, or other method. Soil shall not be tilled when it is frozen, excessively wet or dry, or otherwise untillable.

D. Remove from site, rocks, clods, roots, or other foreign materials larger than 1" (25 mm) in any dimension.

3.03 FINISH GRADING

A. Grade to uniformly sloping surfaces and to elevations shown on Drawings.

B. Slope finish grade to provide positive surface drainage away from buildings and other structures.

C. Finish grade shall be free of all holes, rills, or gullies caused by erosion or construction operations.

D. Finished ground level shall be firm to prevent sinkage pockets when watered.

END OF SECTION

1) J. M. Brady
2)

PART 1 GENERAL

1.01 SECTION INCLUDES

A. Soil and material testing.

B. Excavation, backfilling, and grading for structures.

C. Dewatering.

D. Protective and support systems and associated work.

E. Disposal of excess or unsatisfactory materials.

F. Underground obstructions.

1.02 DEFINITIONS

A. Support system (per OSHA): Structure such as underpinning, bracing, or shoring, which provides support to adjacent structure, underground installation, or sides of an excavation.

B. Protective system (per OSHA): Method of protecting employees from cave-ins, from materials that could fall or roll from an excavation face or into an excavation, or from collapse of adjacent structures. Protective systems include support systems, sloping and benching systems, and other systems that provide necessary protection.

1.03 QUALITY ASSURANCE

A. Owner will retain services of qualified professional soils consultant and testing laboratory.

B. Responsibilities of soils consultant and testing laboratory shall include:
   1. Sampling, testing, and approval of backfill materials prior to and during placement.
   2. Sampling and testing to determine moisture-density and maximum density characteristics of materials in accordance with ASTM D1557 or ASTM D698.
   3. Observation of placement, selection of test locations, and testing of material during placement to determine that uniformity of compaction and specified compaction requirements are met. Determine in-place densities in accordance with ASTM D1556, D2167, or D2922, as applicable. Determine moisture contents in accordance with ASTM D2216 or D3017, as applicable. Conduct one test for every 1,000 sq ft (93 m^2) of backfill material placed.
   4. Inspection and approval of soil at bottom of excavations under foundations, considering settlement and load-bearing characteristics of soil and design bearing capacity.
   5. Providing reports to Owner giving information on materials and testing performed.
   6. Making recommendations to Owner where deviations from Specifications occur or conditions are considered undesirable.
   7. Binding reports and recommendations in one report at end of Project and giving one copy to Owner.

C. Responsibilities of Contractor shall include:
   1. Providing samples of backfill materials to testing laboratory.
   2. Notifying soil consultant and testing laboratory a minimum of 5 working days before commencing work that requires testing and minimum of 3 working days notice of any work requiring testing thereafter.
   3. Providing access in field for compaction testing and inspection and testing of natural bearing soils.
   4. Allowing inspection and approval of subgrades and fill layers by soil consultant before further Work in that area is performed.

1.04 INFORMATIONAL SUBMITTALS

A. Quality assurance data:
   1. Test reports on samples of all backfill materials.
   2. Laboratory compaction test reports establishing moisture-density relationships and maximum densities for all backfill materials.
   3. Field in-situ compaction test reports including layouts identifying field test locations and elevations.
   4. Test reports and records used to determine adequacy of soils at bottom of excavations including layouts identifying field test locations and elevations.
   5. Recommendations for corrections where deviations from Specifications occur or where conditions are considered undesirable.

1.05 EXISTING CONDITIONS

A. Protect underground facilities encountered during excavation. Provide support of facilities as required to facilitate excavation and project construction. Repair, without compensation, existing active facilities damaged during operations.

B. Notify Owner of unexpected subsurface conditions and discontinue Work in area until Owner provides directive and notification to resume work.

PART 2 PRODUCTS

2.01 STRUCTURAL BACKFILL

A. Use material removed from excavations as backfill material, if suitable, unless shown or specified otherwise.

B. Exclude debris, large stones, rocks, roots, organic material, expansive material and other deleterious materials.

C. Type: Excavated or imported material conforming to one of following ASTM D2487 (Unified Soil Classification System) classifications: GW, GP, SW, or SP.

D. Use for all backfill except where specified otherwise.

2.02 GRANULAR FILL

A. Type: Clean, medium or coarse sand conforming to ASTM D2487 (Unified Soil Classification System) classification SW.

B. Material: Free of earth, clay or other foreign substances.

C. Use: Place granular fill under interior slabs-on-grade where removal of existing slab has left depressions or voids.

2.03 CRUSHED ROCK

A. Clean crushed rock.

B. Size and grading: 1" (25 mm) maximum, 10 to 35% passing No. 8 (2.38 mm) sieve, not over 15% passing No. 50 (0.30 mm) sieve, and not over 6% passing No. 200 (0.075 mm) sieve.

C. Material: Free of earth, clay, or other foreign material.

D. Use: 12” minimum layer below exterior slabs.

PART 3 EXECUTION

3.01 SITE VERIFICATION OF CONDITIONS

A. Prior to construction operations, verify governing dimensions and elevations. Take photographs to record any prior settlement or cracking of structures, pavements, and other facilities potentially affected by construction operations. Prepare list of such damages, verified by dated and signed photographs by Contractor and Owner. These documents will be record of existing conditions prior to start of construction.

B. Survey adjacent properties, structures, and facilities that may be influenced by excavation operations, establishing elevations at fixed points to act as bench marks. Clearly identify benchmarks and record existing elevations. Locate datum level used to establish benchmark elevations sufficiently distant so as not to be affected by movement resulting from construction activities.

C. During excavation, resurvey benchmarks weekly, or more often as may be necessary due to construction activities, employing a licensed land surveyor or registered professional engineer, licensed in the State of Iowa. Maintain accurate log of surveyed elevations for comparison with original elevations. Promptly notify Owner if changes in elevations occur or if cracks, sags, or other damage is evident. Promptly perform whatever is necessary in order to stabilize existing elements.

3.02 EARTH EXCAVATION

A. Excavate as required for construction work. Extend excavation sufficient distance from walls and footings to allow for placement and removal of forms. Stockpile topsoil on site for reuse.

B. Use special care when excavating under and around existing facilities. Support existing facilities and earth under facilities to prevent settlement resulting from construction operations.

C. Excavation for soil supported foundations:
   1. Excavate to elevations shown or specified. Soils consultant shall inspect and approve soil at foundation levels shown.
   2. Proofroll bottom of excavation with 25-ton (22.7 metric ton) pneumatic-tired roller. Notify Owner of any soft spots which are detected.
   3. If soils consultant determines that bearing capacity of soil is unsuitable at foundation levels shown:
      a. Notify Owner of subsurface conditions and discontinue Work in area until Owner provides directive and notification to resume Work.
   4. Fill with crushed rock, at no expense to Owner, unauthorized excavations carried below bottoms of foundation levels shown.
   5. Where concrete is placed directly on natural soil, trim excavations by hand to remove material disturbed by machine excavation; produce neat, plane surface at elevation of bottom of footing.

3.03 BACKFILL

A. Backfilling around structures:
   1. Backfill only after concrete has attained 85% of specified 28-day compressive strength.
   2. Prevent displacement of construction during backfilling operations; backfill opposite sides of structures simultaneously.

B. Backfill to elevations or grades required for drainage. Maintain surface and slopes for drainage during operations.

C. Placement:
   1. Maintain surfaces free of water, debris, and excessively wet, and other deleterious materials.
   2. Place backfill materials in successive horizontal layers not more than 8" (200 mm) in loose depth.
   3. Place materials at proper moisture content for obtaining densities as specified. Generally maintain within -1% to +3% of optimum.
   4. Material too dry or too wet to compact properly: Moisten or aerate to extent necessary to produce desired results.

D. Compaction:
   1. Compact backfill to at least 95% of maximum density as determined by ASTM D1557 or D698.
   2. Perform sampling and testing in each layer of backfill placed to confirm adequacy of compaction. Minimum of one sample and test for each 1,000 sq ft (93 m^2) of each layer.
   3. Do not use pneumatic tired rollers, sheeps-foot type heavy mechanical tamping rollers or heavy vibratory compactors within 6' (1.8 m) of structure, walls, pipes, or other construction which might be damaged by compaction equipment.
   4. If tests indicate inadequate compaction, remove, replace and recompact material until compliance with these specifications is achieved.

3.04 DEWATERING

A. Furnish, install, and remove dewatering equipment necessary to drain and keep excavations free of water under all circumstances.

B. Prevent surface water from flowing into excavations and into existing or new structures; promptly remove any water accumulated.

C. Maintain dewatering operations until Work area is accepted as complete.

3.05 SITE GRADING

A. Grade areas disturbed by construction operations.

B. Finish grade to smooth, uniformly sloping surfaces to elevations required for drainage.

C. Fill depressions and provide for positive drainage away from buildings and structures.

D. Finish with 4" (100 mm) layer of topsoil.

3.06 DISPOSAL OF MATERIAL

A. Dispose of excess and unsuitable excavated material off site in disposal area obtained by Contractor except excavated topsoil shall be stockpiled at site and reused.

B. Dispose of debris, large stones, rocks, roots, and organic materials off site in disposal area obtained by Contractor.

END OF SECTION

1) A. L. Bickford
2) W. T. Turechek

PART 1 GENERAL

1.01 SECTION INCLUDES

A. Aggregate base including subgrade preparation, hauling, spreading, moisture control, compacting, and material tests.

1.02 INFORMATIONAL SUBMITTALS

A. Laboratory test results indicating conformance to "Materials," this Section.

B. Moisture-density laboratory tests verifying conformance to ASTM D698.

PART 2 PRODUCTS

2.01 MATERIALS

A. Aggregate shall be gravel, crushed gravel, crushed quartzite, crushed limestone, or crushed slag meeting following gradation:

Sieve Size	Percent Passing Sieve
1-1/2"	100
1"	90-100
1/2"	60-90
No. 4	30-45
No. 16	10-40
No. 200	4-12

B. Percent of loss shall not exceed 45 in accordance with AASHTO T96 and 25 in accordance with AASHTO T104, 5-cycle, sodium sulfate solution. Plasticity index shall not exceed 4 in accordance with AASHTO T90.

PART 3 EXECUTION

3.01 CONSTRUCTION

A. Prior to placing aggregate base, prepare subgrade
1. Strip topsoil, vegetation and other objectionable material from construction areas. Average depth assumed to be 6" (150 mm). Stockpile clean topsoil at job site. Dispose of vegetation and other objectionable material at off-site location selected by Contractor.
2. Excavate, remove and satisfactory disposal of excess excavated materials taken from within Project area, construction of subgrades, ditches, and incidental work; and removal and satisfactory disposal of unstable and unsuitable materials and their replacement with satisfactory materials where needed
3. In cuts for drives, roads, and parking areas, scarify top 6” (150 mm) of subgrade, moisture condition as necessary, and compact to minimum of 95% of maximum dry density as determined by ASTM D698. Proof-roll subgrade by making 3 passes with heavy pneumatic-tired roller to detect localized zones of unstable material. Perform proofrolling only when groundwater is not present and subgrade is not saturated. Roller shall have a gross weight of not less than 25 tons (22.6 metric tons) and shall consist of not less than 4 wheels revolving in one transverse line. Under working conditions, roller shall develop a compression at not less than 650 lb/in (12 kg/mm) width of tire tread.

B. Moisture content shall be sufficient to prevent segregation of aggregate and to obtain satisfactory compaction. Use of a central mixing plant to obtain moisture content will be permissible, but wetting aggregate in cars, bins, stock piles, or trucks will not be permitted.

C. Construct base in layers not more than 4" (100 mm) compacted thickness, except that if tests indicate desired results are being obtained, compacted thickness of any layer may be increased to a maximum of 8" (200 mm).

D. Immediately after material has been placed with spreader, compact with tamping roller, vibratory roller, pneumatic-tired roller, or with combination of any roller types to a density of not less than 95% maximum density determined in accordance with ASTM D698.

E. Compaction of top layer shall continue until aggregates are completely interlocked and stable and all movement of material stops. Give top layer final rolling with 3-wheel or tandem roller.

F. If any subgrade material is worked into base material during the compacting or finishing operations, remove granular material within affected area and replace with new aggregate.

G. In-place field density and moisture tests: Perform tests conforming to ASTM D1556 and ASTM D2216 at frequency of 1 test per lift for each 2,000 sq yd (1672 sq m) or fraction thereof.

END OF SECTION

1) J. M. Brady
2)

PART 1 GENERAL

1.01 SECTION INCLUDES

A. Portland cement concrete pavement including reinforcement; mixing, hauling, and placement, finishing, and curing of concrete; integral curb; and joints.

1.02 INFORMATIONAL SUBMITTALS

A. Certificates of compliance with standards specified for reinforcing steel.

B. Quality control data: Submit prior to commencing concrete placement.
   1. Tests, or certificates of compliance with standards specified for:
      a. Cement: From each shipment.
      b. Aggregates: For each size aggregate from each source of aggregate, for grading, deleterious substances, and soundness.
      c. Admixtures, joint sealers, and curing materials.
   2. Testing laboratory reports:
      a. Proposed concrete design mix.
      b. Laboratory test reports on concrete beams taken in field in accordance with AASHTO T23 and AASHTO T177.

1.03 QUALITY ASSURANCE

A. Perform testing of materials, mix design, and beams.

B. Refer to Section 01 40 00.

PART 2 PRODUCTS

2.01 CONCRETE MATERIALS

A. Cement:
   1. Normal portland cement: ASTM C150, Type I.
   2. High-early-strength portland cement: ASTM C150, Type III. May be used instead of normal portland cement at CONTRACTOR's option.

B. Aggregate:
   1. Regular aggregate: Strong, durable, well-graded minerals conforming to ASTM C33 requirements for grading, deleterious substances, and soundness.
   2. Use aggregates not conforming exactly to above specifications provided:
      a. Special tests or actual service establish that such aggregates will produce concrete of quality specified.
      b. An Addendum is received prior to receipt of Bids; no deviations will be permitted after receipt of Bids.
   3. Coarse aggregate: 1" to No. 4, AASHTO M80 (No. 57) or ASTM C33 (No. 57).

C. Water: Clean, fresh, free from injurious amounts of oil, alkali, acid, salts, organic materials, or other substances that may be deleterious to concrete or steel.

D. Admixtures: Air entraining agent, ASTM C260. Use in accordance with manufacturer's recommendations.

E. Storage of materials:
   1. Cement: Keep clean, dry, and free from weather damage.
   2. Aggregates: Stockpile each gradation separately on clean, noncontaminating surface.

2.02 CONCRETE DESIGN

A. Class of concrete:
   1. Class: C.
   2. Strength: 4,000 psi.
   3. Maximum gallons of water per sack of cement: 5.5.
   4. Slump: 1/2" to 2".

B. Concrete strength:
   1. Strength listed is minimum 28-day flexural strength.
   2. Strength of high-early-strength cement concrete; 7-day strength equal to 28-day strength of normal portland cement concrete.

2.03 REINFORCING STEEL

A. Bars: ASTM A615 or A617, Grade 40.

B. Wire fabric: ASTM A185.

C. Remove scale, loose flaky rust, dirt, and other coatings which would impair bond.

2.04 JOINT SEALER

A. Use either hot-poured joint sealer in accordance with AASHTO M173 or preformed elastomeric joint seal in accordance with AASHTO M220.

PART 3 EXECUTION

3.01 FORMING

A. Side forms shall have a height, without horizontal joint, at least equal to designed thickness of pavement at its edge, except additional height represented by integral curb may be secured by bolting extra forms upon top of main form. Use flexible or curved forms for curves having radii of 100' or less.

B. Attach curb forms rigidly to side forms, using fastenings by manufacturer of forms. Curb form shall extend the plane of pavement form without variation of more than 1/8". Set top of curb form at elevation of top of curb being built, except at curb runouts.

C. Forms shall be clean before being set and coated with form oil before concrete is placed against them.

3.02 REINFORCEMENT

A. Install reinforcement prior to vibration. Bars shall be supported by chairs.

B. When welded wire fabric is used, first strike off concrete at elevation specified for fabric and then place fabric sheets flat. Deposit concrete and vibrate in such a manner as not to displace or distort fabric.

3.03 JOINT CONSTRUCTION

A. Construct transverse contraction joints as detailed on Drawings. Saw joints at a time dependent on characteristics of concrete and rate at which its temperature changes. It shall be after concrete has hardened to extent that objectionable tearing of edges will not occur and before time that random cracking would be likely to occur if joint were not sawn. This may be as soon as 4 hours after placement in hot weather.

B. Construct longitudinal joints as detailed on Drawings and substantially true to line. Saw longitudinal joints as soon as possible after concrete has hardened and no later than 48 hours after placement.

C. Construct expansion joints as detailed on Drawings. Take care when depositing concrete to prevent movement of or damage to joint assembly. Set substantial reference stakes or markers showing exact location of joint prior to placing concrete. After finishing equipment has passed over joint, check for movement. If movement is in excess of 0.5", correct installation to its intended position immediately.

3.04 MIXING OF CONCRETE MATERIALS

A. Measure and proportion concrete materials accurately. Tolerance for measuring all materials shall be 1%.

B. Mix concrete materials by one of following methods:
1. At site of placement in paving mixer.
2. In construction or stationary mixer to be used for Work on Project only.
3. Ready-mixed or truck-mixed from approved plant.

3.05 PLACING CONCRETE

A. Design and Drawings are based on using paving mixer or stationary mixer with placement of concrete in double-lane widths.

B. Pavement constructed using ready-mixed concrete shall be placed in single-lane widths only and without extra compensation for additional joints, dowels, tie bars, reinforcement, or extra concrete required.

C. Deposit concrete upon supporting surface in a manner which will minimize disturbance of reinforcement and segregation. Deposit concrete to full depth of pavement in single operation.

D. Operate vibrating units as recommended by manufacturer. Pan and tube vibrators shall be operated at not less than 3,500 vibrations per minute. Internal vibrators shall be operated at not less than 7,000 vibrations per minute.

E. End of run:
1. Whenever 30 minutes or more have elapsed since last concrete has been deposited on subgrade or base, or if such a delay is anticipated, install approved header. Shape to fit cross section of pavement and place so that upper edge will conform to crown of pavement and install on subgrade or base perpendicular to surface and at right angle to center line of pavement.
2. Vibrate concrete against header and finish with edging tool.
3. Remove header and supports before paving resumes. Vibrate cold joint to integrate fresh concrete with previously placed concrete to maximum extent practicable.

3.06 INTEGRAL CURB CONSTRUCTION

A. Construct integral curb preceding initial set in concrete but following finishing of main slab. Proceed as rapidly as finishing operations on slab will permit and complete in same working day as slab is placed.

B. Use freshly mixed concrete in plastic, workable condition. Do not use concrete which has dried or partially hardened or requires retempering.

C. Extend transverse joints in slabs through curb directly over joint in slab and make same depth.

3.07 FINISHING

A. Promptly after concrete has been placed, vibrated, and consolidated, strike off surface with screed to true section, line, and grade. Surface shall have uniformly gritty texture, such as produced by burlap or carpet drag with edges rounded.

B. Longitudinal elements of pavement surface shall not deviate from a straight line by more than 1/8" when tested with 10' straightedge. Areas not meeting this requirement may be required to be removed and replaced, or otherwise satisfactorily corrected at CONTRACTOR's expense.

3.08 JOINT SEALER INSTALLATION

A. Heat hot-poured joint sealers in thermostatically controlled kettle to temperature required for use but not above that recommended by manufacturer. Slightly overfill transverse joints without soiling adjacent pavement. Longitudinal joints shall be flush or not more than 1/8" below pavement surface. Remove filling material in excess of foregoing requirements.

B. Install preformed elastomeric seals as recommended by manufacturer. Seal shall be below level of pavement surface by approximately 1/8" (3 mm) but not more than 1/4" (6 mm). Filler shall be in one piece for full length of transverse joint.

3.09 FIELD QUALITY CONTROL

A. Weather limitations:
   1. Do not place concrete when weather conditions prevent good workmanship. Do not use aggregates containing frozen lumps. Do not place concrete on frozen subgrade.
   2. Concrete mixing and placing may be started if temperature is at least 34°F and rising. At time of placement, concrete shall have a temperature of at least 40°F. Placement of concrete shall stop when temperature is 38°F and falling.

B. Make 1 concrete beam when placing normal portland cement concrete in accordance with AASHTO T23 for each day's placement. Test at 28 days.

C. Slump test: Consistency determined in accordance with AASHTO T119. Ordinarily slump for unvibrated concrete shall be 1" to 2" (25 mm to 50 mm) and for vibrated concrete, 3/4" to 1-1/2" (19 mm to 38 mm). Limits may be increased if required to obtain satisfactory workability, but slumps in excess of 3" (75 mm) not permitted. Take as many slump tests as required to assure compliance.

D. Maintain air content at 8.0% measured by pressure method, with tolerance of ±2%, when measured on grade just prior to consolidation. Target air content for nonslip form paving shall be 7.0% ±1.5%

3.10 PROTECTION

A. Cure by one of following methods:
   1. Waterproof paper method.
   2. Polyethylene sheeting method.
   3. Wetted burlap method.
   4. Membrane curing compound.

B. Cure for at least 72 hours, prior to removal of curing covering.

C. Use membrane curing compound of a type suitable to conditions occurring on site at time concrete is placed and apply by spraying at rates recommended by manufacturer.

D. During cold weather conditions, protect concrete less than 36 hours old against freezing when temperature forecast is for 32°F or below.

E. Protect pavement from damage due to rain.

F. Normal portland cement Type I pavement shall not be subjected to traffic of any type until concrete has aged 7 days and has a modulus of rupture of 575 lb or more per square inch. High-early-strength portland cement Type III pavement may be opened in 48 hours if modulus of rupture is 575 lb or more per square inch.

END OF SECTION

1) J.M. Brady
2)

PART 1 GENERAL

1.01 SECTION INCLUDES

A. Forming.

B. Portland cement concrete sidewalk.

PART 2 PRODUCTS

2.01 MATERIALS

A. Portland cement concrete sidewalk: See Section 32 13 13.

B. Aggregate:
1. Clean crushed rock or gravel.
2. 100% passing 1/2" (13 mm) sieve and not over 4% passing No. 16 sieve.

PART 3 EXECUTION

3.01 FORMING

A. Lumber of not less than 2" (25 mm) nominal thickness or steel of equal rigidity, held securely in place by stakes or braces with top edges true to line and grade.

3.02 PORTLAND CEMENT CONCRETE SIDEWALK

A. Concrete:
1. Thickness: 6" (150 mm).
2. Width: As shown on Drawings.
3. Finish: Broom.
4. Joints: Divide surface with grooves constructed at right angles to center line. Grooves shall extend to 1/4 the depth of concrete, shall be not less than 1/8" (3 mm) nor more than 1/4" (6 mm) in width and shall be edged with an edging tool having a 1/4" (6 mm) radius. No slab shall be longer than 6' (1.8 m) nor less than 4' (1.2 m) on any one side. Joints shall be located to produce optimum visual appearance.
5. Edges: Finish with edging tool having 1/4" (6 mm) radius.

B. Subgrade: Tamp or roll until thoroughly compacted.

C. Expansion joints:
1. Material: 3/4" (19 mm) preformed joint filler with top of filler placed 1/4" below surface of concrete.
2. Locations: At intervals not more than 100' in length of sidewalk or as shown on Drawings. Locate to create least visual detraction possible.

D. Backfill: After concrete has been cured and forms removed, backfill spaces along edges of sidewalk to required elevation with excavated material. Material shall be compacted until firm and face neatly graded.

E. Maintenance of surfaces:
1. Pavement damage due to settlement of backfill: Repair for period of Bond.
2. Depressions more than 6" (150 mm) deep in aggregate surfaced areas: Fill to grade for period of Bond.

3.03 PROTECTION

A. Curing: See Section 32 13 13.

END OF SECTION

1) J.M. Brady
2)

PART 1 GENERAL

1.01 SECTION INCLUDES

A. Finish grading.

B. Seeding and fertilizing.

C. Erosion control.

D. Maintaining seeded areas until acceptance.

1.02 TEMPORARY FACILITIES

A. Water supply:
   1. Contractor shall make necessary arrangements for and provide adequate supply of potable water at its expense.
   2. Furnish necessary hose, equipment, attachments, and accessories for adequate watering of turf areas, as needed.

1.03 QUALITY ASSURANCE

A. Supply producer's guaranteed statement of analysis for percentages of mixtures, purity, germination, weed seed content inert material, net weight, year of production, and date and location of packaging of seed.

B. Supply manufacturer's guaranteed statement of analysis, types of nutrients, and weight of fertilizer.

1.04 DELIVERY, STORAGE, AND HANDLING

A. Deliver grass seed in original sealed packages bearing producer's guaranteed statement of analysis for percentages of mixtures, purity, germination, weed seed content, inert material, year of production, date and location of packaging, and net weight. Packages shall be labeled in conformance to U.S. Department of Agriculture Rules and Regulations under the Federal Seed Act, and seed laws of the State of Iowa. Seed that has become wet, moldy, or otherwise damaged will be rejected.

B. Fertilizer supplied in closed containers shall be delivered in waterproof bags showing weight, types of nutrients, and manufacturer's guaranteed statement of analysis.

C. Fertilizer supplied in bulk shall be accompanied by bill-of-lading giving weight, types of nutrients, and certificate of manufacturer's guaranteed statement of analysis, for each shipment.

PART 2 PRODUCTS

2.01 GROWING MEDIA

A. Fertilizer:
   1. Preplanting fertilizer: Dry commercial ready-mixed material, produced in pelleted or granular form; uniform in composition and free flowing. Analysis shall be 10-10-10.
   2. Postplanting fertilizer: Dry commercial ready-mixed composition and free flowing. Analysis shall be 10-10-10. At least 50% of the total nitrogen shall be derived from ureaformaldehyde.
   3. Prilled fertilizer: Blend of coated prills and uncoated prills, analysis 16-7-12 plus iron, as manufactured by Sierra Chemical Company, Newark, California, or equal.

B. Limestone: Agricultural grade ground limestone having calcium carbonate equivalent of not less than 80%. Either pelleted or ground to such fineness that 40% will pass 60-mesh (250 µm) sieve and 90% will pass 8-mesh (236 µm) sieve.

2.02 SEED

A. Seed shall be seed of latest season's crop, State Certified by the State of Iowa.

B. Seed mixture:

North and South Plant Lawns and Grass Areas	Proportion by Weight
Adelphi Kentucky bluegrass	70%
Creeping red fescue	10%
Manhatten perennial rye	20%

2.03 MULCH

A. Straw mulch: Stalks from harvested oats, wheat, rye, barley, or rice, and shall be in air-dry condition and free of noxious weed seeds, mold, and other objectionable material. Hay or chopped cornstalks are not acceptable.

B. Wood cellulose fiber mulch: Virgin wood cellulose fiber, specially prepared for hydraulic application, and shall contain no germination or growth inhibiting factors. Dye an appropriate color to facilitate visual metering of its application. Fiber shall contain not in excess of 10% moisture. Fiber shall have property of becoming uniformly dispersed and suspended when agitated in water, forming homogeneous slurry, and when hydraulically sprayed on soil surface, shall form blotter-like ground cover that readily absorbs water and allows percolation to underlying soil.

2.04 ACCESSORIES

A. Asphalt: Conform to ASTM D977 for "Emulsified Asphalt," Grades SS-1, CSS-1, or RS-1; or for "Liquid Asphalt," Grade RC-70.

B. Soil stabilizer: Nontoxic synthetic or organic tackifier specially prepared for use as mulch tack.

C. Excelsior blanket: Mat of interlocking curled wood excelsior, with consistent thickness, and fiber evenly distributed. One side of blanket shall be covered with mesh of woven cotton cord, twisted paper cord, or biodegradable extruded plastic mesh, with openings not less than 5/8" x 3/4" (16 mm x 19 mm), and not exceeding 1-1/2" by 3" (38 mm by 75 mm). Minimum weight of blanket shall be 0.95 lb/sq yd (0.52 kg/m^2). American Excelsior Co., or equal.

D. Jute matting: Plain, uniform open-weave of new (unused) and unbleached single jute yarn. Loosely twisted construction and shall not vary in thickness by more than one-half its normal diameter.

E. Paper mat: Knitted construction of polypropylene yarn with uniform openings interwoven with strips of biodegradable paper.

F. Fiber mat: Bulky structure of entangled nylon monofilaments, melt-bonded at intersections, forming stable mat of suitable weight and configuration. Minimum weight 7.75 oz/sq yd (260 g/m^2).

G. Staples: 11-gage (3 mm) wire, "U" shaped, with minimum crown width of 1" (25 mm) and minimum leg length of 8" (200 mm).

PART 3 EXECUTION

3.01 FINISH GRADING

A. Refer to Section 31 22 19 for finish grading requirements.

3.02 FERTILIZING

A. Uniformly apply preplanting fertilizer at rate of 10 lb/1,000 sq ft.

B. Incorporate amendments into soil to an average depth of 1" (25 mm) by raking, rototilling, disking, harrowing, or other method.

C. Do not apply grass seed and fertilizer at same time, in same machine.

3.03 SEEDING

A. Turfed area: Establish turf to limits of graded areas not to be covered by buildings or structures, planting areas, paving, or other surfacing; and on any original turf areas disturbed by new construction.

B. Planting time:
1. Sow seed only at times of year when temperature, moisture, and climatic conditions will promote germination and plant growth.
2. No seed shall be sown during high winds, when soil is frozen or snow covered, or when soil is excessively wet or dry, or in any other condition unsatisfactory for planting.
3. Sow seed immediately after preparation of seedbed. At time of seeding, soil shall be friable, and moist but not muddy, with top 2" (50 mm) cleaned of stones or debris over 1" (25 mm) in any dimension. Soil surface shall be smooth and free of irregularities.

C. Sowing:
1. Sow seed at application rate as follows with mixture specified:
a. Lawn and grass areas: 4 lb/1,000 ft^2 (175 lb/acre).
2. Method of sowing shall be Contractor's option.
3. When broadcast seeder is used, seed shall be uniformly distributed and then covered to an average depth of 1/4" (6 mm) by means of light harrow, cultipacker, hand rake, or other device.
4. When grass seed drill is used, drill shall be operated generally perpendicular to direction of surface drainage whenever practical. Seed shall be drilled uniformly to average depth of 1/4" (6 mm).
5. When drop seeder is used, seed shall be uniformly distributed with no gaps. If seeder is not equipped with means to cover seed, seed shall be covered to average depth of 1/4" (6 mm) by means of light harrow, cultipacker, hand rake, or other device.
6. When hydraulic planter/mulcher is used, it shall have continuous agitation action which keeps seed mixed in uniform distribution in water slurry until pumped from tank.
a. Apply slurry within one hour after seed is added to tank. Seed which is allowed to remain mixed in slurry for longer than one hour will not be accepted for use.
b. Application of prilled fertilizer with seed in single operation may be substituted for application of preplanting and postplanting fertilizer.

3.04 MULCHING

A. Apply mulch to seeded areas within 24 hours after seeding.

B. Seeded areas not designated to receive erosion control materials shall be mulched by one of following methods:
1. Apply straw mulch uniformly by hand, blower, or other equipment. Apply straw to be anchored by pinning or crimping at rate of 90 lb/1,000 sq ft (440 kg/1,000 m^2). Apply straw to be anchored with asphalt or soil stabilizer at rate of 70 lb/1,000 sq ft (340 kg/1,000 m^2).
2. Apply wood cellulose fiber mulch by hydraulic planter/mulcher that has continuous agitation action keeping mulch mixed in uniform distribution in water slurry until pumped from tank. Mulch shall be applied at rate of 28 lb/1,000 sq ft (140 kg/1,000 m^2) on level grades and 35 lb/1,000 sq ft (170 kg/1,000 m^2) on slopes exceeding 5:1 ratio. Mulch application may be combined with seeding in a single operation with hydraulic equipment.

C. Anchoring:
   1. Straw mulch may be anchored by pinning or crimping into soil with a straight serrated disk or other equipment.
   2. Straw mulch may be anchored with asphalt at rate of 12 gal/1,000 sq ft (490 l/1,000 m^2). Asphalt may be applied as film immediately after mulch is in place, or may be applied simultaneously with straw from blower equipment.
   3. Straw mulch may be anchored with soil stabilizer applied as film immediately after mulch is in place, or simultaneously with straw from blower equipment. Apply soil stabilizer in accordance with manufacturer's recommendations.
   4. Wood cellulose fiber mulch may be anchored with soil stabilizer included in hydraulic mulch slurry. Apply soil stabilizer in accordance with manufacturer's recommendations.

3.05 EROSION CONTROL

A. Immediately after seeding has been performed, apply erosion control matting to areas with slopes greater than 10 %.

B. Excelsior blanket:
   1. Lay either parallel or perpendicular to slope, with netting on top and fibers in contact with soil.
   2. Stapling:
      a. Strip ends: 1' (300 mm) centers.
      b. Adjoining strip ends: Butted snugly, common row of staples on 1' (300 mm) centers.
      c. Edges: 6' (1,800 mm) centers.
      d. Adjoining edges: Butted snugly, common row of staples on 6' (1,800 mm) centers.
      e. Strip centers: 6' (1,800 mm) centers.

C. Jute or paper mat:
   1. Lay either parallel or perpendicular to slope.
   2. Upslope edge of jute or paper mat shall be buried in 6" (150 mm) deep anchor slot.
   3. Adjoining strip ends: Up slope end of each strip shall be buried in anchor slot. Strips lapped 12" (300 mm) with up-slope section on top.
   4. Fiber mat: Install in accordance with manufacturer's written instructions.
   5. Stapling:
      a. Strip ends: 6" (150 mm) centers.
      b. Strip edges: 3' (900 mm) centers.
      c. Strip centers: 3' (900 mm) centers.

3.06 CLEANUP

A. Clean up daily during progress of Work and at completion.

B. Remove from Project site surplus materials and any debris resulting from turfing Work.

C. Turfed areas shall be neatly dressed and finished. Walks, paved areas, and adjacent walls and windows shall be flushed clean.

3.07 MAINTENANCE

A. Assume responsibility for proper care of turfed areas from time of completion of turfing operations on any part of project and for duration of turf establishment period. Turf establishment period shall not begin until planting on entire Project is approved by Owner. Turf establishment period shall be for 45 consecutive growing days, or until final acceptance, whichever period is less. A "growing day" shall be defined as any calendar day exclusive of those days from November 15 to March 1, subject to adjustment of those days authorized by Owner, depending on prevailing conditions.

B. Costs of reseeding or remulching required because of faulty operations or negligence on part of Contractor shall be borne by Contractor. Any areas reseeded shall have turf establishment period beginning upon reseeding or resodding and of duration as hereinbefore specified. Owner will assume risk for loss or damage due to beneficial occupancy of Project in any part, vandalism, damage by

animals or fire, or losses due to curtailment of water by local authority, or due to "Acts of God" (floods, winds of 60 mph or more, or heavy hail).

C. Watering: Water turfed areas immediately after planting and thereafter as necessary to maintain adequate moisture for promotion of deep root growth. Water shall be applied in such a way that ruts will not be made in soil surface.

D. Fertilizing: Within 5 days of inspection and acceptance of turf, uniformly apply postplanting fertilizer at rate of 10 lb/1,000 sq ft.

E. Mowing: Mow turfed area to average height of 2" whenever height of grass reaches 3".

F. Protection: Provide temporary protective fences, barriers, and signs where deemed necessary by Owner.

G. Reseeding: When directed by Owner, reseed areas on which original seed has failed to grow. Reseeding shall be performed as specified herein for seeding, and in manner that will cause minimum disturbance to existing stand of grass.

H. Remulching: When directed by Owner, remulch areas on which original mulch has eroded, washed, or blown off. Remulching shall be performed as specified herein for mulching, and in manner that will cause minimum disturbance to existing stand of grass.

3.08 ACCEPTANCE

A. Upon written request by Contractor, or expiration of establishment period, whichever comes first, Owner will inspect turf areas.

B. At time of inspection, turf shall exhibit healthy, vigorous growth, shall be uniform in color and quality, and shall be reasonably free of weeds, diseases, or other visible imperfections.

C. At time of inspection, grassed area shall contain no bare spots greater than 2 sq ft (0.20 m^2) in size.

D. Any turf areas not accepted by Owner shall be replanted.

E. Upon final acceptance of turf area, remove temporary fences, barriers, and signs installed for protection of that area. Contractor will be relieved of further responsibility for care and maintenance of accepted area.

END OF SECTION

1) J. M. Brady
2)

PART 1 GENERAL

1.01 SECTION INCLUDES

A. Basic control system requirements for furnishing hardware, unconfigured software, configuration and programming, training, testing, startup and commissioning.

1.02 WORK BY OTHERS

A. Installation of control system equipment furnished under this Contract by Contractor, under coordination with Integrator. See Section 40 96 15 Control System Operational Description for Integrator contact information.

1.03 DEFINITIONS

A. Terms defined to describe use and performance of instruments used process industry and in accordance with ISA SP51.1 as follows:
   1. Accuracy: Degree of conformity of indicated value to a recognized accepted standard value, or ideal value.
   2. Availability: Ability of device or system to be used or acquired over a period of time.
   3. Redundancy: Amount of duplication for purpose of preventing failure of entire system upon failure of single component.
   4. Reliability: Probability that a device or system will perform its objective adequately, for period of time specified, under operating conditions specified.
   5. Repeatability: Ability to reproduce, among a number of consecutive measurements, output for same operating conditions, approaching from same direction for full range traverses.

B. Network diagram: Diagram detailing major components and communication interconnections of system. Diagrams shall show interfaces between equipment, communication highway details including differentiating between fiber optics and copper cables, and listing communications protocols.

C. Following definitions will be used in project correspondence and documentation. Owner will establish common library of terminology to be used by all parties.
   1. Initialization – Process by which initial values of mode, setpoint and output of a control block are set.
   2. Running – State in which device, which has been commanded to start, has achieved commanded state.
   3. Stopped – State in which device, which has been commanded to stop, has achieved commanded state.
   4. Tripped – Device has been stopped by something other than an operator command either within control system or external to control system.
   5. Failed – State in which device, which has been commanded, has not achieved requested state within predefined time period.
   6. Electrical Protection – Tripping of device for electrical reasons, changed device state independent of any system output or command, i.e. overcurrent, undervoltage, etc.

1.04 INFORMATIONAL SUBMITTALS

A. Training plan containing course outlines and schedules for training to be provided on-site.

B. Factory demonstration test procedure.

C. Factory test schedule: Provide agenda for factory testing listing sequence in which system components shall be checked.

1.05 CLOSEOUT SUBMITTALS

A. Operation and maintenance manual, for information only:

1. Complete instruction manuals and parts lists covering installation, operation, and maintenance of panel-mounted devices. Manuals shall include interface drawings defining terminal numbers and functions for interface with other instruments and equipment.
2. Schematic and wiring diagrams for each panel and enclosure. Show color of wire, termination points, terminal numbers, cable, and wire numbers.
3. Manufacturer's data and or specification sheets for control system equipment, showing design parameters, equipment catalog designations, calibration range, features and options provided. All sheets shall be identified with corresponding identification numbers.

B. Prior to project closeout:
1. Final operation and maintenance manuals.
2. Provide submittals updated to reflect "as-built" conditions.

1.06 QUALITY ASSURANCE

A. Qualifications:
1. Contractor shall be certified under International Standards Organization (ISO9001) Quality Guidelines.
2. System integrator: Company specializing in programming systems specified with minimum 5 years documented experience. Contractor shall demonstrate minimum of 5 years experience for projects of similar size and complexity involving control systems with continuous process operation, PID loop control, data communications, graphic screens and reports in similar applications.

B. After functional testing is witnessed by Owner and Owner' representative, necessary corrections shall be made to system to satisfaction of Owner before system is shipped.

C. Manufacturer's qualifications: Contractor shall use manufacturers whose equipment will continue to be manufactured for a period of at least 3 years or who will maintain a stock of compatible spare parts for a period of 10 years after startup of control system.

D. Regulatory requirements: Work shall be in accordance with applicable requirements of following codes and standards.
1. Electronic Industry Association (EIA) 232-D – Interface Between Data Terminal Equipment and Data Communication Equipment Employing Serial Binary Data Interchange
2. Institute of Electrical and Electronic Engineers (IEEE)
   a. ANSI/IEEE C37.90.1 – Standard Surge Withstand Capability (SWC) Tests for Protection Relay Systems
   b. ANSI/IEEE C37.90.2 – Trial Use Standard Withstand Capability of Relay Systems to Radiated Electromagnetic Interference from Trans-receivers
3. National Fire Protection Association (NFPA):
   a. 70 – National Electrical Code
   b. 85 – Boiler and Combustion Systems Hazards Code
4. National Electrical Manufacturer's Association (NEMA):
   a. AB-1 – Molded Case Circuit Breakers
   b. ICS-1 – General Standards for Industrial Control and Systems
   c. ICS-2 – Standards for Industrial Control Devices, Controllers and Assemblies
   d. ICS-4 – Terminal Blocks for Industrial Use
   e. ICS-6 – Enclosures for Industrial Controls and Systems
5. International Society of Automation (ISA):
   a. ANSI/ISA-50.00.01 – Compatibility of Analog Signals for Electronic Industrial Process Instruments
   b. ANSI/ISA-51.1 – Process Instrumentation Terminology.

1.07 SITE CONDITIONS

A. Environmental design conditions.
1. Outdoor:
   a. Temperature: -20 to 120ºF.

b. Humidity: 10 to 100%.
2. Indoor:
a. Temperature: 50 to 110ºF.
b. Relative humidity: 10% - 90%, noncondensing.
3. Control room:
a. Temperature: 50 to 90ºF.
b. Relative humidity: 30% - 65%.

B. Equipment located in BFP room shall be Unclassified.

C. Equipment located in Digester Building basement (location of BFP Feed Pumps) shall be rated for Class 1 Division 1.

D. Electrical supply characteristics:
1. 120-volt, single-phase, 60 Hz.

E. Instrument air source: None in BFP room.

F. Control signals:
1. Analog:
a. Voltage: 24-volt dc.
b. Range: 4 to 20 mA.
c. Load impedance: 0 – 750 ohms, minimum.
2. Discrete:
a. Voltage: 120-volt ac.
b. Contact type: Form C (1 NO, 1 NC), minimum.
c. Rating: 5 amperes at 120-volts ac, minimum.

1.08 WARRANTY

A. Provide 1-year warranty. Warranty shall not begin until final acceptance of system by OWNER.

B. Specified availability shall be maintained throughout warranty period. Failure to achieve specified availability may at OWNER option result in extension of warranty period until specified performance has been met for a continuous period equivalent to warranty period.

PART 2 PRODUCTS

2.01 SYSTEM REQUIREMENTS

A. System operation shall maintain constant duty cycle regardless of upsets, operator activities, or remote access of system from LAN.

B. Process variables shall be scanned, limit checked, broadcast and updated on monitor displays each second, synchronously.

C. Software maintenance functions shall not affect any drop in system except during download procedures.

D. System components shall be of solid-state, standardized, modular, plug-in construction. Modules shall be removable without need for rewiring.

E. Equipment shall be provided with operation indicating lights, test panels and other features to assist in testing and diagnostics. On-line self-diagnostic routines shall run automatically and notify operator of any malfunctions and location of malfunction.

F. Owner shall receive latest hardware technologies until equipment is purchased.

G. Provide special tools, test equipment, and software required for system installation, operation, and maintenance.

H. Reliability:
   1. Control system shall operate in wastewater plant environment with high degree of reliability.
   2. Hardware shall consist of latest solid-state technology and packaged to operate in environment required.
   3. Control software shall implement simple, predictable, high-level task-specific organizations of modules.
   4. Failure of one drop will not affect any other drop in system.
   5. On-line diagnostics shall be provided to disconnect drop from process data highway should malfunction occur.
   6. Diagnostics shall be provided to quickly define failed part. Graphical representation for card-level diagnostics shall be provided.

I. Maintainability:
   1. Materials and equipment shall be standard products of reputable manufacturer regularly engaged in production of same. Where more than one unit of same item is required, items provided shall be identical.
   2. Contractor shall define number of different printed circuit cards, power supplies, and connectors required in system.
   3. Maintenance procedures shall be simple, straightforward and well documented.
   4. Software tools required to maintain, expand, reconfigure, and reload system shall be provided with each workstation.

J. Communications:
   1. Communication system shall provide redundancy such that single failure does not affect operation.
      a. Process data highway failure shall be reported to system immediately.
      b. System shall be capable of automatic detection and wrapping.
   2. Provide redundant process data highway. Process data highway shall be high-speed utilizing dual bus/star topologies, in accordance with ANSI 802.3.
   3. Highway data communication:
      a. Communication bus: Distributed controllers shall be interconnected with high-throughput network.
      b. Redundancy: Network shall implement redundant copper media backbone.
      c. Communication processors: Separate data highway network interface cards at each drop shall handle inter-drop communication and data transmission.
      d. Communication rate: Up to 100 MB/sec, sufficient to support at least 200,000 periodic data point values each second. Process variable information shall be available to every drop in system at least every 100 milliseconds.
      e. Communication media: Data highway backbone shall be copper media. Communication between highway and drops shall be copper media as required to meet system speed requirements.
      f. Communication protocol: Data highway communication shall use both synchronous and asynchronous modes.
      g. Reliability: No single drop point of failure shall disable any part of data highway. Self-diagnostics shall cause any drop to disconnect itself from system upon detection of any unrecoverable error.
   4. Management information communication:
      a. Communication Bus: Workstations shall interconnect to process data highway for new LAN. It shall be possible for remote devices to interconnect via bridges, switches, or routers.
      b. Communication protocol: Network shall be TCP/IP compliant.
      c. Redundancy: When used in redundant configuration network shall be capable of automatic error detection and wrapping when failure of primary bus or device is detected.
   5. Data highway drops:
      a. Each data highway drop shall have universal access to process point variables in system wide global database.

b. Each drop functional processor shall provide intelligence to perform drop's task and interface with global database.
c. Each drop shall be reconfigurable and serviceable, including removal from highway, without affecting other drops.
d. Drop shall be physically distributed anywhere in plant.
e. Drop shall be able to be added in parallel without affecting currently operating drops.

2.02 DESIGN REQUIREMENTS

A. Belt Filter Press Integration
1. General Integration Work:
a. Three (3) new Belt Filter Presses shall each provide new back panels sized to replace those in corresponding, existing BFP control panels located in the control room adjacent to the BFP room. Existing back panels being removed and equipment thereon shall be turned over to OWNER.
b. New BFP vendor shall provide logic/programming and related information for BFP system operation, for Integrator and Owner use.
1) THIS INFORMATION AND DOCUMENTATION SHALL BE PROVIDED TO CONTRACTOR AND/OR INTEGRATOR LATER, AS DESIGN DEVELOPS.
c. Internal panel wiring shall be remapped to confirm and identify all instrumentation termination locations.
d. Panel wiring no longer in service or made obsolete shall be removed.
2. SCADA Work:
a. Modify graphic and database to remove PLC I/O points not used with new BFP equipment.
b. Modify graphic and database to add PLC I/O points used with new BFP equipment, as defined in PLC I/O Listing.
c. Relink or add BFP control and monitoring points to existing SCADA control screens. Modify or add graphic screens as required, in coordination with OWNER.

2.03 PERFORMANCE REQUIREMENTS

A. Accuracy: System shall report values conforming to standard values indicated by field instruments.

B. Availability: Overall system availability (operator workstation to field instruments) shall be 99% over 30-day test period. System is defined as available during periods where redundant component is out of service and network is still functional.

C. Reliability: Overall system reliability shall be 99% over 30-day test period.

D. Repeatability: System shall produce consistently acceptable results over 30-day test period.

E. Screen access and update within network shall be less than 2 seconds.

PART 3 EXECUTION

3.01 TRAINING

A. Provide training at Owner's site facilities following site acceptance tests. Training shall include aspects of operator's interface, system operation, and maintenance. Purpose of training session will be to answer questions by operations and maintenance personnel, which have arisen out of initial use of system during site acceptance.

B. Furnish training programs to train Owner' personnel in administration, configuration, operation, and maintenance of control system. Contractor shall provide basic required training and recommend additional training programs for Owner.

C. Provide copies of training material for Owner.

D. Provide training to familiarize Owner' personnel with system. Training shall be oriented toward installed equipment and software and satisfy requirements for following.
   1. General training: Familiarize project management personnel, engineers, operators, and maintenance personnel with control system overview, philosophy, major hardware components, reporting, and data retrieval.
   2. Operator training:
      a. System equipment operation, both individually and collectively as operating system.
      b. Procedures required to operate and to modify each process from operator's workstation.
      c. Normal and abnormal startup and shutdown operating conditions.
      d. Operator/control system interactions in conjunction with use of process information system functions.

E. Training shall be taught by person with significant training experience. Instructor and course materials shall be approved in advance of training.

F. Tuition costs associated with training shall be included with Bid. For on-site training, food, lodging, and travel expenses for trainer shall be included.

G. Courses shall be scheduled such that courses do not overlap to allow same personnel to attend more than one training course.

H. Training shall be scheduled by system supplier minimum of 30 days in advance of start of training.

END OF SECTION

1) Z. M. Carter
2) S. A. Warren

PART 1 GENERAL

1.01 SECTION INCLUDES

A. Pipe, fittings, valves, and accessories for wastewater process piping system.

B. Polyvinyl chloride sewer pipe; ductile iron pipe (DIP); stainless steel pipe, fiberglass pipe, polyvinyl chloride (PVC) pressure pipe, high density polyethylene (HDPE) pipe, and sodium hypochlorite pipe.

C. Chemical injectors.

D. Manholes and accessories.

E. Connections to existing system, and between pipes of dissimilar materials.

F. Concrete encasement.

G. Relocation of water mains.

H. Repair of damaged water mains and services; sanitary and storm sewers; and sanitary service connections.

I. Tests.

1.02 INFORMATIONAL SUBMITTALS

A. Product Data: Include data on manufacturer's catalog data for pipe, pipe joints, gaskets, frames, lids, and gratings.

B. Quality assurance data:
1. Submit certificates from manufacturer evidencing compliance with standards listed herein for pipe, pipe joints, frames, lids, and gratings.
2. Certification by nationally recognized, independent organization that components, materials, and treatment chemicals in contact with potable water conform to ANSI/NSF Standard 60 or 61, as applicable.

1.03 QUALITY ASSURANCE

A. Welding materials and procedures: Conform to ASME Code and applicable State Labor Regulations.

B. Employ certified welders in accordance with ANSI/AWS D1.1.

C. Components, materials, and treatment chemicals that come into contact with potable water shall be certified for conformance to ANSI/NSF Standard 60 or 61, as applicable.

PART 2 PRODUCTS

2.01 DUCTILE IRON PIPE (DIP)

A. Location: Process piping greater than 4" (100 mm) in diameter and less than 64" (1,600 mm) in diameter.

B. Design: AWWA C151.

C. Manufacture: AWWA C151.

D. Wall thickness:

1. Buried:
   a. 4” through 12”: Pressure Class 350.
   b. 14” through 20”: Pressure Class 250.
   c. 24” through 64”: Pressure Class 200.
2. Exposed (flanged): AWWA C115 Class 53.

E. Fittings:
1. Buried, mechanical 4”- 48” (100 mm – 1,200 mm) or push-on 4” – 64” (100 mm – 1,600 mm) joints: AWWA C110 or C153.
2. Exposed, flanged joints 4” – 64” (100 mm - 1,600 mm): AWWA C110 or C153 with long radius bends on sludge service.

F. Joints:
1. Buried: Mechanical (4” – 24” (100 mm – 600 mm)) or push-on (4” – 64” (100 mm – 1,600 mm)), AWWA C111.
2. Exposed: Flanged (4” – 64” (100 mm – 1,600 mm)), AWWA C111.
3. Gasket: Styrene butadiene rubber.
4. Fitting joints: Type similar to that used for pipe; AWWA C110, C111, C115, or C153.
5. Restrained joints: Use pipe manufacturer’s standard restrained joints rated at specified test pressure for buried piping lengths.

G. Pipe and fittings exterior coating: Asphaltic coating, AWWA C151.

H. Interior coating and lining:
1. Bituminous coating: AWWA C151.
2. Cement lining: AWWA C104; standard thickness with bituminous seal coat.

I. Underground ductile iron pipe and fittings shall be wrapped with 8-mil polyethylene encasement in accordance with ANSI/AWWA C105/A21.5-10 installation method.

2.01 FIBERGLASS REINFORCED PIPE (FRP)

A. Location: 6” (150 mm) or smaller sludge pressure pipe systems.

B. Design: ASTM D2996, ASTM 4024, ASTM D5685, ASTM D2925.

C. Test Methods: ASTM D2992, ASTM D1599, ASTM D2105, ASTM D2412.

D. Material:
1. Pipe shall be manufactured by filament winding process using an amine cured epoxy thermosetting resin to impregnate strands of continuous glass filaments.
2. Pipe shall be heat cured.
3. Pipe shall have resin-rich corrosion barrier reinforced with surfacing veil.
   a. Corrosion barrier shall have a minimum resin content of 80%.
   b. Minimum thickness of corrosion barrier: 30 mil nominal.
4. Pressure rating of 232 psig (1,600 kPa) and continuous operation at temperature up to 200 ^{o}F (93°C).

E. Fittings:
1. Fittings shall be manufactured using the same materials as the pipe.
2. Fittings may be manufactured by compression molding, spray-up/contact molding, or filament winding methods.
3. Fittings shall be adhesive bonded matched tapered bell and spigot or flanged.
4. Flanges shall have ANSI B16.5 Class 150 bolt hole patterns.

F. Joints:
1. Buried: Mechanical (4” – 24” (100 mm – 600 mm)) or push-on (4” – 64” (100 mm – 1,600 mm)), AWWA C111.
2. Exposed: Flanged (4” – 64” (100 mm – 1,600 mm)), AWWA C111.

3. Gasket: Styrene butadiene rubber.
4. Fitting joints: Type similar to that used for pipe; AWWA C110, C111, C115, or C153.
5. Restrained joints: At pipeline tees, plugs, caps, bends, and other locations where unbalanced forces exist. Use pipe manufacturer's standard restrained joints rated at specified test pressure for buried piping lengths.

G. Gaskets: 1/8" thick, 60-70 Durometer full-face type suitable for passing sludge with a solids content ranging between 2% and 6%.

H. Accessories:
1. Hex head bolts: ASTM F593, Type 304 stainless steel.
2. SAE washers on nuts and bolts.
3. 6" (150 mm) manual tapering tool compatible with installed fiberglass piping.

I. Manufacturer: Green Thread NOV Fiber Glass Systems, or equal.

2.02 STAINLESS STEEL PIPE

A. Application: Effluent water piping. Option for replacement sludge piping for BFP Feed Pump installation in digester building.

B. Design conditions:
1. Pressure: 150 psi working pressure and 200 psi test pressure.
2. Temperature: 200ºF maximum.

C. Material: Schedule 10S, seamless or straight-seam welded, Grade TP304L, conforming to ASTM A312.

D. Fittings: Class WP or CR, Grade 304L, conforming to ASTM A403 or Victaulic grooved type.

E. Flanges: ANSI B16.5, Class 150, Type 304 with Type 304 bolts and nuts.

F. Pipe and fittings: Pickled at point of manufacture; scrub and wash until discoloration is removed.

G. Piping: Shop fabricated by welding to maximum extent practical. Field welding shall be minimized.

H. Field joints: Flanged, welded, or joined with roll grooved couplings conforming to AWWA C606.

I. Roll grooved couplings:
1. Manufacturer: Victaulic Type 77S, or equal.
2. Materials:
a. Coupling: Galvanized ductile iron conforming to ASTM A536.
b. Bolts and nuts: Type 316 stainless steel conforming to ASTM A193.
c. Gaskets: Grade E EPDM flush seal type by Victaulic, or equal.
3. Pressure rating: Suitable for test pressure specified for piping system in Piping Schedule.
4. Pipe support systems shall be in accordance with coupling manufacturers guidelines.

2.03 POLYVINYL CHLORIDE PIPE

A. Location: Process piping less than 4" (100 mm) in diameter

B. Conform to:
1. Sizes less than 4" (100 mm): ASTM D1785.
2. Sizes 4"-15" (100 mm – 375 mm): ASTM D3034, SDR 35.

C. Material: PVC. Minimum Cell Classification 12454 as defined in ASTM D1784 except pipe meeting ASTM F789 shall be Cell Class 12164B.

D. Minimum wall thickness and shape shall produce following minimum pipe stiffness when tested in accordance with ASTM D2412 with maximum deflection of 5%.
   1. ASTM D1785: 46 psi (317 kPa).
   2. ASTM D3034, SDR 35: 46 psi (317 kPa).

E. Joints:
   1. Flexible, elastomeric type; ASTM D3212.
   2. Gasket materials: ASTM F477.

F. Fittings: Meet requirements of applicable pipe and joint specifications.

G. Pipe design and installation shall result in installed pipe having deflection of less than 5%.

2.04 POLYVINYL CHLORIDE (PVC) PRESSURE PIPE

A. Location: Force main less than 4” (100 mm) in diameter.

B. Material and class: ASTM D2241, 160 psi (1,100 kPa), SDR 26.

C. Joints: Integral bell with elastomeric gaskets.

D. Fittings: Cast or ductile iron, furnished by pipe manufacturer and rated for 200 psi (1,380 kPa). PVC fittings meeting requirements of AWWA C900 or AWWA C905 may be used.

E. Restrained joints:
   1. Fittings: Series 2500 bell restraints, EBAA Iron Sales, Inc., or equal.
   2. Straight PVC pipe: Series 1600 restraint harness, EBAA Iron Sales, Inc., or equal.

F. PVC pipe materials may not be used in areas where there is likelihood pipe will be exposed to significant concentrations of pollutants comprised of low-molecular weight petroleum products or organic solvents or their vapors.

G. Wire for location of plastic piping: No. 12 (4 mm^2) solid copper, THHN insulation in yellow or orange color.

2.05 SODIUM HYPOCHLORITE SYSTEM PIPING

A. Chlorinated polyvinyl chloride pipe (CPVC):
   1. Service: Exposed sodium hypochlorite carrier pipe.
   2. Material: CPVC, ASTM F441, Schedule 80, socket-type.
   3. Joints: Solvent-welded with solvent cement suitable for continuous exposure to sodium hypochlorite.
   4. Fittings: CPVC, ASTM F439, Schedule 80, socket-type. Maximum bend angle of fittings shall be 45°.
   5. Flanges: Socket-type, flat-faced PVC, conforming to ASTM D1784, Schedule 80 for connecting to equipment.

B. Braid reinforced polyvinyl chloride (PVC) hose:
   1. Service: Sodium hypochlorite carrier hose within containment pipe and at injection points where shown on Drawings.
   2. Type: Multi-ply, braid-reinforced, clear hose suitable for continuous sodium hypochlorite service and pressures of 150 psi.
   3. Material: Flexible PVC, compatible with sodium hypochlorite.
   4. Couplings: Provide hose clamps or other connection devices suitable for service and pressure specified. Coupling materials shall be suitable for continuous sodium hypochlorite service. Couplings in buried hose shall be located only in sodium hypochlorite manholes.

C. Polyvinyl chloride (PVC) pipe:
   1. Service: Buried sodium hypochlorite containment pipe, exposed sodium hypochlorite containment pipe, and sodium hypochlorite vent pipe. Sodium hypochlorite distribution containment piping from sodium hypochlorite building to point of application.
   2. Multiple sodium hypochlorite carrier pipes may be grouped in a single containment pipe where shown on drawings.
   3. Material: PVC, ASTM D1785, Schedule 40, socket-type.
   4. Joints: Solvent-welded with solvent cement suitable for continuous exposure to sodium hypochlorite.
   5. Fittings:
      a. PVC, ASTM D2467, Schedule 40, socket-type.
      b. Maximum bend angle of elbow fittings: 45°.
      c. Long radius 90° elbows may be used.
   6. Containment pipe shall be sloped toward sodium hypochlorite manholes. There shall be no low points and a maximum of one high point between manholes to provide for leaks in sodium hypochlorite carrier hose to drain to sodium hypochlorite manholes.

2.06 VALVES

A. Valves shall be type shown on Drawings and as specified herein.

B. Insofar as practicable, use valves of only one manufacturer for each type of valve.

C. Provide special tools required for repacking and disassembling valves provided.

D. Pressure class, body material, bonnet-type, and trim material: As shown in standards and as specified. Unless specified elsewhere, valves shall be designed for a working pressure of not less than 150 psig.

E. Laying dimensions of flanged valves: In accordance with ANSI B16.10.

F. Valves shall open by turning operator in a counterclockwise direction.

G. Provide valves with manufacturer’s name and pressure rating clearly marked on outside of body.

H. Valve connections:
   1. Provide valves suitable to connect to adjoining piping as specified for pipe joints. Use pipe size valves.
   2. Threaded for pipe sizes 2-1/2” (64 mm) and smaller, unless otherwise specified.
   3. Flanged for exposed pipe sizes 3” (75 mm) and larger.
   4. Mechanical joint for buried pipe 3” (75 mm) and larger.
   5. Solder or screw to solder adapters for copper tubing.

2.07 GATE VALVES

A. Design and manufacture: AWWA C500.

B. Use valves of one manufacturer insofar as practicable.

C. Pressure rating: 200 psi (1,370 kPa) for 12” (300 mm) and smaller; 150 psi (1,030 kPa) for larger than 12” (300 mm).

D. Body material: Ductile or cast iron.

E. Bonnet: Bolted.

F. Trim: Brass or bronze.

G. Use type permitting repacking under pressure when wide open.

H. Packing: Stuffing box with nonasbestos packing or double O-ring.

I. Stem arrangement:
   1. Exposed cast iron valves: Rising stem with handwheel.
   2. Buried: Nonrising stem with 2” (50 mm) wrench nut.

J. Disc: Solid wedge disc type.

K. Direction of opening: Turn left to open.

L. Insofar as practicable valves shall have joint end designed for type of pipe installed.

M. Interior coating: Epoxy; AWWA C550.

N. Quality standard, buried valves:
   1. Mechanical joint ends: Mueller Co. A-2360-20, or equal.
   2. Flanged and mechanical joint ends: Mueller Co. A-2360-16, or equal.

2.08 RESILIENT-SEATED GATE VALVES

A. Design and manufacture: AWWA C509.

B. Use: At Contractor’s option, use instead of gate valves for effluent water (EW) service.

C. Pressure rating: AWWA 200 psi (1,380 kPa).

D. Body and gate material: Ductile or cast iron.

E. Bonnet: Bolted.

F. Stem and trim: Bronze.

G. Use type permitting repacking under pressure when wide open.

H. Packing: O-ring.

I. Stem arrangement: Nonrising stem with 2” (50 mm) wrench nut for mechanical joint end valves; rising stem for flanged end valves.

J. Resilient seat: Applied to gate.

K. Direction of opening: Turn left to open.

L. Joint: Mechanical joint.

M. Interior coating: Epoxy; AWWA C550.

N. Provide handwheel operator on exposed valves; provide valve box for buried valves. Equip valves positioned 7’-0” (2.1 m) or more above floor level with chain wheel with chain extending to 3’-0” (1 m) above floor.

O. Quality standard: Clow “R/W” valve, Mueller “Resilient Seat,” American Valve and Hydrant “80 CRS” valve, or equal.

2.09 CHECK VALVES

A. Type: Swing type for water, wastewater, and sludge service.

B. 3” (75 mm) or larger:
1. Cast iron body, bronze mounted, bronze faced disc, stainless steel hinge pins, and adjustable outside lever and weight or spring arranged to assist in closing.
2. Manufacturer and model: Dresser Industries, Inc., M & H Style 159-02 or 259-02, or equal.

C. Smaller than 3” (75 mm):
1. Bronze body, screwed access cover with bronze and composition disc seats rated for 200 psi working pressure.
2. Manufacturer: Crane No. 41, Nibco Scott T-413Y, or equal.

2.10 PLUG VALVES

A. Type: Manual.

B. Water or wastewater service:
1. Nonlubricated 100% pipe area rectangular ported design with bolted bonnets; valve shall have full pressure rating both directions. .
2. Plug: Eccentric, resilient-faced plug with entire surface covered.
3. Seat: 90% nickel chrome raised.
4. Body: Cast iron (semisteel) conforming to ASTM A126 Class B.
5. Bushings: Permanently lubricated, stainless steel upper and lower bushings sealed by means of grit seals.
6. Packing:
   a. Type permitting repacking without removing bonnet.
   b. Adjustable without disassembly of valve or actuator.
7. End connections: 125 lb flanged.
8. Operator:
   a. 3” (75 mm) and less: Lever; provide extended stem where shown.
   b. 4” (100 mm) and larger: Worm gear actuator suitable for 125 psi pressure. Equip valves positioned 7'-0” or more above floor level with chainwheel with chain extending to 3'-0” (1.0 m) above floor.
   c. Provide buried valves with valve box, cover, and required adapters.
   d. Manufacturer: DeZurik Model PEF, or equal.

C. Sludge service:
1. Nonlubricated 100% pipe area rectangular ported design with bolted bonnets; valve shall have full pressure rating both directions. .
2. Plug: Eccentric, resilient-faced plug with entire surface covered.
3. Seat: 90% nickel chrome raised.
4. Body: Cast iron (semisteel) conforming to ASTM A126 Class B.
5. Lining: Body interior shall be lined with glass to minimize struvite deposition.
6. Bushings: Permanently lubricated, stainless steel upper and lower bushings sealed by means of grit seals.
7. Packing:
   a. Type permitting repacking without removing bonnet.
   b. Adjustable without disassembly of valve or actuator.
8. End connections: 125 lb flanged.
9. Operator:
   a. 3” (75 mm) and less: Lever; provide extended stem where shown.
   b. 4” (100 mm) and larger: Worm gear actuator suitable for 125 psi pressure. Equip valves positioned 7'-0” or more above floor level with chainwheel with chain extending to 3'-0” (1.0 m) above floor.
   c. Provide buried valves with valve box, cover, and required adapters.
   d. Manufacturer: DeZurik Model PEF, or equal.

D. Refer to Drawings for existing plug valves requiring new motor actuators as specified in this Section.

2.11 BALL VALVES

A. PVC piping:
1. Type: Full port, double-union, socket end connections.
2. Material: PVC.
3. Working pressure: Not less than 150 psi.
4. Manufacturer: Nibco Chemtrol, or equal.

B. Service air piping:
1. Type: Conventional-port, threaded end connections.
2. Material: Bronze.
3. Working pressure: Not less than 125 psi.
4. Manufacturer: Nibco 580 Series, or equal.

C. Sodium hypochlorite service:
1. Type: Full port, double-union, socket end connections.
2. Material: CPVC.
3. Working pressure: Not less than 150 psi.
4. Valves shall be vented to allow escape of gas which comes out of solution.
5. O-rings: Viton.

2.12 SOLENOID VALVES

A. Refer to Section 40 91 00-13.

B. Type: 2-way.

C. Enclosure: NEMA 4X.

D. Coils: Class H high-temperature construction. Suitable for continuous duty.

E. Electrical power: 120-volt grounded, single-phase, 60 Hz, ac.

F. Manufacturer: ASCO, or equal.

2.13 PRESSURE SAFETY VALVE

A. Service: Maintain constant upstream pressure in effluent water system within close limits.

B. Type: Pressure sustaining valve.

C. Size and connection: 6” (150 mm), flanged.

D. Body and cover: Ductile iron.

E. Diaphragm: Nylon reinforced Buna-N rubber.

F. Seat, disc guide and cover bearing: Bronze or stainless steel.

G. Disc: Buna-N rubber.

H. Stem, nut and spring: Stainless steel.

I. Maximum working pressure: 125 psig (860 kPa g).

J. Range of adjustment: 0 to 25 psig (0 to 35 kPa g).

K. Maximum temperature: 150°F (65°C).

L. Maximum flow rate: 2,000 gpm (7,570 l/m)

M. Manufacturer: Cla-Val Automatic Control valves, or equal.

2.14 TEMPERATURE CONTROL VALVE

A. Type: Globe, 2-way.

B. Service: Effluent water.

C. Main line size: 6” (150 mm).

D. Size: 4” (100 mm).

E. Designations: TCV-8802A

F. Body: Cast iron, 125 lb flanged ends.

G. Plug: Type 416 stainless steel.

H. Characteristic: Equal percentage.

I. Packing: PTFE V-ring.

J. Retainer and seat ring: Stainless steel.

K. Flow action: Up.

L. Seat tightness: Class IV.

M. Design parameters:
1. Maximum flow, gpm: 350.
2. Minimum flow, gpm: 90.
3. Maximum pressure, psig: 70 psig.
4. Normal inlet pressure, psig:
   a. Maximum flow, psig: 35.
   b. Minimum flow, psig: 55.
5. Outlet pressure, psig:
   a. Maximum flow, psig: 28.
   b. Minimum flow, psig: 48.
6. Effluent water temperature, F: 42-75.

N. Actuator: Electric as specified in this Section.

O. Manufacturer: Fisher Controls EZ, or equal.

2.15 PRESSURE REDUCING VALVE

A. Location: Digester Building 8600 Ground Floor
1. Type: Globe.
2. Service: Effluent water.
3. Main line size, in: 6.
4. Size, in: 3.
5. Body: Ductile iron, 150 lb flanged ends.
6. Diaphragm material: Buna N.
7. Trim: Stainless steel.

8. Seat tightness: Standard.
9. Flows:
   a. Maximum flow, gpm: 350.
   b. Minimum flow, gpm: 90.
   c. Inlet pressure, psig: 75-100.
   d. Outlet pressure, psig: 35-65 adjustable.
   e. Effluent water temperature, F: 42-63.
10. Actuator: Pilot operated, utilizing system fluid. Provide strainer as required by manufacturer for pilot line.
11. Pilot and pilot line material: Stainless steel.
12. Manufacturer: ClaVal Model 90-01, or equal.

B. Location: Digester Building 8500 Basement:
1. Type: Globe.
2. Service: Effluent water.
3. Main line size, in: 1.
4. Size, in: 3/4.
5. Body: Cast iron, NPT screwed ends.
6. Seal: Diaphragm, No. 1 trim.
7. Diaphragm material: Stainless steel.
8. Trim: Stainless steel.
9. Plug, retainer and seat: Type 416 stainless steel.
10. Seat tightness: Standard.
11. Flows:
   a. Maximum flow, gpm: 10.
   b. Minimum flow, gpm: 3.
   c. Inlet pressure, psig: 75-100.
   d. Outlet pressure, psig: 35-65 adjustable.
   e. Effluent water temperature, F: 42-63.
12. Actuator: Self-contained.
13. Actuator diaphragm material: Stainless steel.
14. Manufacturer: Fisher Controls 95H, or equal.

C. Location: Scum spray valve vaults.
1. Type: Globe.
2. Service: Effluent Water.
3. Main line size, in: 1.
4. Size, in: 3/4.
5. Body: ASTM B62 threaded-bronze, union bonnet.
6. Stem: Silicon brass, rising.
7. Disc: Teflon.
8. Packing: TFE impregnated nonasbestos fibers.
9. Pressure class: 150 psi.
10. Manufacturer: Nibco Model T-235, or equal.

2.16 VALVE OPERATORS AND VALVE ACCESSORIES

A. Provide standard wheel operators for gate valves, unless otherwise specified.

B. Plug valves: Standard lever operators.

C. Ball valves: Standard lever operators.

D. Handwheels:
1. Maximum force applied to rim of handwheel, to seat or unseat valve against full differential operating pressure, shall be limited to 75 lb.
2. Provide heavy steel impact handwheels or enclosed bevel gear with hammer blow action where necessary to conform to 75 lb maximum applied force limitation.

3. Other valve handwheels shall be direct connected and of sufficient size to allow seating and unseating of valve against full differential operating pressure without the use of auxiliary tools.
4. Provide operating nut or lug for air wrench valve operation on valves requiring hammer blow action.
5. Provide mechanical gear operators with adjustable limit stops.

E. Provide locking devices where shown on Drawings. Owner will provide locks.

F. Provide chain wheel operators for manual valves with handwheel operators in horizontal plane located 6'-6" (2 m) above floor, unless otherwise noted. Provide sufficient chain to bring operation down to 6'-6" (2 m) above floor.

2.17 VENT AND DRAIN VALVES

A. Provide vents at high points and drains at low points of piping. Provide as shown and as required for piping furnished including nondetailed piping.

B. Drain and vent valves, except where noted otherwise:
1. Piping 2" (50 mm) and smaller: 1/2" (13 mm) ball.
2. Piping 2-1/2" (64 mm) through 5" (125 mm): 3/4" (19 mm) ball.
3. Piping 6" (150 mm) and larger: 1-1/4" (32 mm) ball.

2.18 BALL VALVE

A. Type: 3-way, 3-position true union ball valve.

B. Provide half-turn diversion of flow; shut-off necessary.
1. Position 1 interconnects center port with Run Port 1.
2. Position 2 interconnects center port with Run Port 2.
3. Position 3 shuts off flow.

C. Molded plastic body with union-type piping connection for each of 3 ports.

D. Flow direction clearly marked by handle position.

E. Materials:
1. Body, handle, stem, union nut, ball and end connector: PVC.
2. O-rings: Viton or EPDM.
3. Seats: Teflon (TFE).
4. Stem extension: Carbon steel.

F. Provide stem extension, stem guide(s), and operating handle for installation shown on Drawings.

G. Manufacturer: Chemtrol Model T45M3 Diverter, or equal.

2.19 CHEMICAL INJECTORS

A. Type: Retractable injection quill which can be removed without shutdown of water main.

B. Location: Sodium hypochlorite injection points where shown on Drawings.

C. Rating: 150 psi, minimum.

D. Corporation stop: Brass.

E. Solution tube: 6” (150 mm) long CPVC pipe.

F. Tip configuration: 45° beveled; face upstream.

G. 150 psi rated stainless steel restraint hook.

H. Stainless steel limit chain.

I. Spring loaded CPVC ball check valve with Viton seals and titanium coated spring.

J. Sodium hypochlorite hose: Provide 6’ (2 m) length upstream of check valve.

2.20 WATER MAIN AND SERVICES RELOCATION AND REPAIR ACCESSORIES

A. Ductile iron pipe: AWWA C151, pressure Class 350.

B. Fittings: AWWA C110.

C. Joints: Restrained Mechanical or push-on; AWWA C111.

D. Coat pipe and fittings with bituminous coating in accordance with AWWA C151.

E. Line pipe and fittings with cement mortar and bituminous seal coat in accordance with AWWA C104.

F. Connections to existing mains:
1. Nonpressure locations: Cutting-in sleeves, Clow F-1220, or equal.
2. Pressure locations: Tapping split tees, Clow F-5205, or equal.

G. Water service accessories:
1. Corporation stops: Mueller Co. H-15000, or equal.
2. Curb stops: Mueller Co. H-15204, or equal.
3. Service boxes complete with lid and plug: Mueller H-10316, or equal.

2.21 SEWER MAIN AND SERVICE CONNECTION REPAIR ACCESSORIES

A. Flexible coupling: Fernco “Strong Back RC 1000 Series Coupling,” or equal.

2.22 VALVE BOXES

A. Provide valve box for each buried valve.

B. Valve box shall be complete, assembled unit consisting of adjustable box and extension stem with 2” (50 mm) square operating nut.

C. Box section: Hand-adjustable to required depth through coupling gland with O-ring seal.

D. Stem assembly: Telescoping design with torque capacity of 1,000 ft-lb (1,356 N-m).

E. Equip lower end of box with self-centering alignment ring to center box over valve nut.

F. Lid shall drop into valve box top, rotate 90° to retain, and lock in place with single bolt.

G. Arrange entire assembly to prevent dirt and grit from entering valve box assembly.

H. Lid shall be marked “Water” or “Sewer” as appropriate and have directional arrow for open rotation.

I. Materials:
1. Valve box, base, alignment ring, and top: High-density polyethylene.
2. Extension steel: Galvanized steel tubing.
3. Bolts and screens: Stainless steel.
4. Lid: Cast iron.

J. Manufacturer: American Flow Control “Trench Adapter,” or equal.

2.23 UNIONS

A. Provide for pipe assembly and to allow removal of connecting equipment.

B. Use: Pipe 2” (50 mm) and smaller; for larger piping use flanges or flexible couplings as specified or shown.

2.24 EXPANSION JOINTS

A. Style:
1. Single arch for water and wastewater service.
2. Double arch for aeration air headers.

B. Construction: High-strength fabric and elastomer, reinforced with metal rings or wire. Fill arch with abrasion-resistant soft rubber stock for joints used on wastewater service.

C. End connections: Flanges integral with body of joint and drilled to match ANSI B16.1 125 lb and to conform to companion metal flanges of pipe line.

D. Materials:
1. Elastomer:
a. Tube: Chlorobutyl, neoprene or EPDM.
b. Cover:
1) Indoors: Same as tube.
2) Outdoors: EPDM.
2. Reinforcing:
a. Fabric: Polyester.
b. Metal rings: Steel.
3. Retaining rings: Galvanized steel.

E. Pressure ratings:
1. Pump discharge piping: 100 psi.
2. Pump suction piping: 50 psi.
3. Aeration air piping: 25 psi.

F. Temperature rating: 225ºF minimum.

G. Axial movement:
1. For water and wastewater service, and aeration air piping at blowers.
a. Compression: 3/8” (10 mm) minimum.
b. Elongation: 3/16” (5 mm) minimum.
2. For aeration air headers:
a. Compression: 3/4” (19 mm).
b. Elongation: 1/2” (13 mm).

H. Control units: Provide tie bolts and accessories to prevent excessive elongation.

I. Manufacturer: General Rubber Corporation, Mercer Rubber Company, or equal.

2.25 SLEEVE COUPLINGS

A. Construction: Steel middle ring, without pipe stop, 2 steel followers, 2 rubber compound wedge section gaskets suitable for maximum temperature of 240ºF, and required number of track-head steel bolts to properly compress gaskets.

B. Harness-type lugs, tie rods, and nuts shall be furnished and installed where shown on Drawings. Harness-type connections shall be capable of withstanding working pressure of 100 psi (689 kPa).

C. Provide gap of not less than 1” (25 mm) nor more than 2” (50 mm) between ends of pipe.

2.26 HANGERS AND SUPPORTS

A. Provide hangers and supports as necessary to support piping properly. Unless detailed on Drawings, hanger types shall comply with MSS 58 and MSS 69.

2.27 PIPES THROUGH WALLS AND SLABS

A. Refer to Drawings for pipe penetration details.

B. Cast or ductile iron wall pipes:
1. Provide with intermediate flange.
2. Material, thickness, and ends shall match connecting piping.
3. Provide tapped holes where wall pipes are flush with concrete.
4. Use where shown for pipes passing through floors or walls.

C. Wall sleeves:
1. Use where shown for pipes passing through floors, walls, or roof slabs.
2. Materials: Cast iron with intermediate flange on piping 3” (75 mm) and larger; galvanized steel pipe with anchor ring or lugs on piping smaller than 3” (75 mm).
3. Sleeve length: Extend 2” (50 mm) above floors, flush with other surfaces.
4. Clearance: As recommended by seal manufacturer.
5. Seal: Mechanical, link-type, modular, field assembled, insulating, positive-sealing; “Link-Seal” by Thunderline Corp., or equal.
6. Fire-rated floors and walls: Link-Seal “Pyro Pac,” or equal.

2.28 PIPING IDENTIFICATION

A. Identify piping system with W.H. Brady Company Type B-500, or equal, markers attached to pipe where pipe passes through walls and at 20' (6 m) intervals in exposed areas.

B. Markers shall identify pipe contents in accordance with names and abbreviations shown in piping schedules in this section and on Drawings. Markers shall also indicate direction of flow.

C. Marker color shall conform to following table. Pipe service not listed in table shall match existing pipe marker color system in use at plant.

PIPE COLOR CODING SCHEDULE	
Pipe Service	Colors
Aeration Air	Light Green
Service Air	Dark Green
Fuel Oil	Safety Orange
Natural Gas and digester gas	Safety Yellow
Effluent Water and Seal Water	Tan
Potable Water	Light Blue
Sodium Hypochlorite	Safety Yellow
All Sewage, Overflows, and Drains	Gray
All Sludge, Scum, and Filtrate	Brown)

D. Interior piping does not require painting. Paint exterior natural gas pipe Safety Yellow in color equal to standard Tnemec color. Submit to Owner for review.

E. Colors shall be equal to standard Tnemec colors and shall be submitted to Owner for review.

PART 3 EXECUTION

3.01 PIPE INSTALLATION

A. Store, handle, join, lay, and otherwise install pipe in conformance to pipe manufacturer's recommendations.

B. Before installation, verify all measurements at site; make necessary field measurements to accurately determine sewer make-up lengths or closures.

C. Use proper pipe unloading and handling procedures to prevent damage to pipe and coating.

D. Carefully protect joint material from injury while handling and storing pipe; support pipe to keep weight off joint material; use no pipe with joints deformed, gouged, or otherwise impaired.

E. Keep pipe clean of dirt and foreign matter; clean bell and spigot surfaces of pipe with gasket-type joints and paint with lubricant recommended by manufacturer prior to jointing pipe; conform to manufacturer's recommendations.

F. Touch-up abraded pipe coatings.

G. At connections to structures: Use 3 short pieces, each 2'-6" (750 mm) long.

H. Joints shall be kept clean and installed in accordance with manufacturer's recommendations.

I. Prepare trench in accordance with Section 31 23 00.

J. Minimum earth cover: 5'-0", unless shown otherwise.

K. Plug or cap and block pipe ends or fittings left for future connections.

L. Uncover existing pipe, to which connections are to be made, sufficiently ahead of pipe laying operations to determine fittings required.

M. Make connections between existing and new pipe with specials and fittings to suit actual conditions.

N. Follow recommendations of pipe manufacturer.

O. Gravity sewers:
   1. Commence at lowest point in line; lay spigot ends pointing in direction of flow.
   2. Lower pipe carefully into trench; lay true to line and grade.
   3. Provide smooth, uniform invert; spigots shall bear against bell shoulders.
   4. Check each length of pipe for defects and hairline cracks at ends prior to lowering into trench. No defective pipe shall be used.
   5. Line and grade:
      a. Set offset hubs or laser system as required from bench marks and reference points provided by Engineer.
      b. Check grade of each pipe; check line of every other length of pipe.
   6. Stepping on pipe before backfilling not allowed.
   7. Plug lifting holes with grout.
   8. PVC pipe installation shall result in installed pipe having deflection of less than 5%.

P. Force main:
   1. Minimum cover: 5'-0" (1.5 m).
   2. Lay to line and grade as shown.
   3. Use suitable fittings where grade or alignment requires offsets greater than those recommended by pipe manufacturer.

4. Clean and inspect each section of pipe prior to lowering into trench.
5. Provide thrust restraint by restrained joints where piping changes direction, changes size and at deadends.
6. Install thrust restraints in accordance with requirements shown on Drawings. Installation of restrained joints shall be confirmed by Owner prior to backfilling.

3.02 PIPE JOINTS AND METHODS

A. Welding:
1. Metallic arc process with inert gas root pass (TIG), in accordance with AWS. Use stainless steel electrodes for welding stainless steel-to-stainless steel and stainless steel-to-carbon steel.
2. Store and redry electrodes, as necessary, in accordance with manufacturer's recommendations.
3. Upon completion of weld, attach weld number, welder's identification, and other identification to pipe adjacent to weld. Permanently mark with identification by electric etching, or by blunt-nosed continuous or interrupted-dot die stamps.
4. Weld slip-on flanges on both front and back.
5. Seal weld thermometer wells and piping noted on Drawings or Specifications as seal-welded.
6. Weld end preparations: In accordance with Section 20 05 13 and pipe class specifications included in the Project Manual. Backing rings not allowed.
7. Comply with Owner’s regulations before and during welding procedures.
8. Shielded arc or coated electrodes specifically designed for pipe material.
9. Use only 1 welding operator on each joint.
10. Thoroughly grind or wire brush each weld pass and remove welding slag and defective material before next pass is applied.
11. Welds shall be neat; remove excessive spatter by chipping or grinding.

B. Threaded joints:
1. Thread type: ANSI B2.1 taper pipe thread.
2. Clean-cut threads; ream pipe ends and remove burrs.
3. Apply suitable lubricating, noncorrosive, flexible pipe joint compound to male threads only.

C. Solder joints:
1. Cut tube square, ream end, and remove burrs.
2. Clean tube end and fitting socket to bright metal.
3. Apply flux to both surfaces; preheat if required.
4. Heat fitting; feed solder until joint space is filled.
5. Wipe off excess solder; leave small fillet.
6. Remove flux.

D. Flanged joints:
1. Make up flanges prior to completing last weld in connecting piping; alignment of piping shall be correct without forcing or drifting.
2. Coat bolt threads with suitable lubricant, Crane "Anti-Seize" thread compound, or equal.

E. Solvent-cemented joints: Conform to ASTM D2855.

F. Provide dielectric unions or flanges at connections between ferrous and nonferrous piping and at connections between nonferrous piping and ferrous equipment.

3.03 VALVE INSTALLATION

A. Install valves with stems upright or horizontal.

B. Where not otherwise detailed, locate valves for convenient operation from floors. Provide chain wheels and chains as required for operation from floor level.

C. Install as recommended by manufacturer to prevent distortion of body.

D. Tighten valve glands as work is erected, and again as required after placing in service.

E. Replace any gland packing which is deteriorated or in unsatisfactory condition.

F. Install air release and air/vacuum valves at high points as shown on Drawings or as specified.

3.04 PLUG VALVE INSTALLATION

A. Service: Digester gas.

B. Install valves with seat on inlet side. Where possible, install valves with shaft in horizontal position and plug rotating up in open position. Provide externally adjustable closed position stop on all valves.

3.05 THRUST RESTRAINT

A. Provide thrust restraint by restrained joints where buried pressure piping changes direction, changes size, and at dead ends.

B. Install thrust restraint in accordance with requirements shown on Drawings.

C. Installation of restrained joints shall be confirmed by Owner prior to backfilling.

3.06 HANGERS AND SUPPORTS

A. Refer to Section 20 05 29 for pipe support spacing.

B. Devices in contact with copper piping shall be copper plated.

C. Arrange hangers for adjustment of load and pipe elevation after installation.

3.07 INSTALLATION OF EXPOSED PIPE NOT DETAILED

A. Install essentially as indicated and required; modify as required to clear building structure and openings, lights, ducts, and other services.

B. Route parallel to building lines and other piping.

C. Provide sufficient unions and flanged connections to permit dismantling and removing equipment.

D. Spacing: Adequate to permit servicing valves and specialties, and replacing sections of pipe.

E. Grade: Slope to permit complete draining.

F. Flexibility: Prevent excessive forces or moments on equipment.

G. Vent and drain valves:
   1. Provide vents at high points and drains at low points of water piping.
   2. Vent valves: 1/4” (6 mm) globe.
   3. Drain valves:
      a. Piping up to 5” (125 mm): 3/4” (19 mm) ball.
      b. Piping 6” (150 mm) and larger: 1-1/4” (32 mm) ball.

3.08 CONNECTIONS TO EXISTING SYSTEM

A. Connections to existing manholes and catch basins.
   1. Cut hole in existing manhole at elevation shown.
   2. Remove dirt and debris.
   3. For sanitary sewers, install flexible watertight connection device in accordance with manufacturer’s recommendations.
   4. Insert new sewer pipe flush with inside of manhole or catch basin.

5. Grout new pipe in place for storm sewers.
6. Reconstruct manhole bottom to suit new connection.

B. Connections to existing sewer:
   1. Build new manhole around existing sewer.
   2. Break out existing sewer inside of manhole and construct bottom to suit new connection.

C. Plug existing sewers where indicated; fill pipe with concrete for minimum length of 2’ (600 mm).

D. Connect no storm drains to sanitary sewer.

E. Connect no sanitary service drains to storm sewer.

3.09 CONNECTION BETWEEN PIPES OF DISSIMILAR MATERIALS

A. Connection between concrete and other dissimilar pipe materials 12” (300 mm) and smaller in diameter: Install flexible coupling in accordance with ASTM C425.

B. Connection between concrete and other dissimilar pipe materials larger than 12” (300 mm) in diameter:
   1. Construct 6” (150 mm) thick concrete collar around joint; extend collar 12” (300 mm) each way from joint.
   2. Reinforce with welded wire fabric.
   3. Provide flexible, watertight connection device (rubber or elastomeric gasket) on non-concrete pipe to provide water tight seal.

C. Connection between 2 different types of pressure pipes:
   1. Use suitable manufactured connection.
   2. Design pressure same as for pipe.
   3. Install in accordance with manufacturer’s recommendations.

3.10 CONCRETE ENCASEMENT

A. Pour concrete beneath and around pipe after pipe jointing is complete.

B. Encase with 8” (200 mm) minimum thickness as measured at outside of pipe barrel, or full width of trench bottom.

C. Use 2 temporary pipe supports under barrel per pipe length; 1 near bell and 1 near spigot end.

D. Provide adequate ties and braces to prevent displacement or flotation during encasement.

3.11 NEW SEWER OR FORCE MAIN PARALLELING WATER MAIN

A. Where water main paralleling new sewer or force main is less than 10’ (3 m) horizontally from sewer or force main, notify Engineer.

B. Obtain authorization from Engineer to relocate sewer or force main to obtain 10’ (3 m) of horizontal separation if possible. If impossible to relocate sewer, bottom of water main shall be at least 18” (450 mm) above top of sewer, and in separate trench or on undisturbed shelf to one side of sewer with at least 3’ (900 mm) horizontal separation.

C. If impossible to maintain required clearance, sewer shall be constructed of ductile iron pipe conforming to AWWA C151.
   1. Horizontal separation of at least 2’ (600 mm) shall be provided.
   2. Pressure test at 30 psi (207 kPa) for 1 hour to assure watertightness before backfilling.
   3. Maximum allowable leakage shall be 0.1 gal/hr/1,000 ft/in (0.5 l/hr/100m/100 mm) diameter.

D. Obtain authorization from Engineer to relocate force main to obtain 10’ (3.0 m) of horizontal separation if possible. If impossible to relocate force main to provide 10’ (3.0 m) separation, at least 4’ (1.2 m) of horizontal separation shall be provided.

3.12 NEW SEWER OR FORCE MAIN CROSSING WATER MAIN

A. Notify Engineer if:
1. New sewer crosses over water main.
2. Sewer crosses under water main and vertical clearance is less than 18” (450 mm).
3. New force main crosses over or under water main and vertical clearance is less than 18” (450 mm).

B. If sewer crosses under water main, relocate water main to provide minimum 18” (450 mm) vertical clearance, for minimum of 10’ (3 m) each side of sewer. Locate center of standard length of water main pipe over sewer.

C. If relocation of water main to obtain required clearance is not practical or if sewer crosses over water main, construct sewer with one full length, 20’ (6 m) minimum, of ductile iron pipe conforming to AWWA C151; center both sewer and water main pipe lengths at crossing.

D. If force main crosses over or under water main and vertical clearance is less than 18” (450 mm) obtain authorization from Engineer to relocate force main to provide at least 18” (450 mm) vertical clearance.

3.13 RELOCATION OF WATER MAINS

A. Minimum cover: 5’ (1.5 m).

B. Relocate where shown or required by conflict with sewers. Field verify size in advance for timely reconstruction.

C. Use suitable fittings where grade or alignment requires offsets greater than those recommended by pipe manufacturer.

D. Use cutting-in sleeves or tapping split tees where required to make connections to existing water mains.

E. Inspect each section of pipe for defects prior to lowering into trench.

F. Cleaning and disinfection:
1. Immediately prior to lowering into trench:
a. Clean interior of all foreign material and dirt.
b. Thoroughly swab or spray interior and ends with 1% hypochlorite solution.
2. During laying prevent ground water, soil and other foreign material from entering pipe.
3. After laying and leakage tests are completed, and before main is put into service:
a. Inject solution of calcium hypochlorite and water at slow rate; minimum initial chlorine residual in mains shall be 50 mg/l.
b. Let stand for 24 hours and test chlorine residual; minimum chlorine residual shall be 25 mg/l.
c. Repeat above steps as necessary to secure desired minimum residual.
d. After successfully maintaining chlorine residual outlined above, flush main until chlorine residual equals chlorine content of supply water.
4. Make connections to existing mains; place calcium hypochlorite inside relocated main prior to making connection.

G. Provide thrust restraints by restrained joints where piping changes direction.

3.14 REPAIR OF DAMAGED WATER MAINS AND SERVICES

A. Contractor shall repair breaks in existing lines caused by construction operations.

B. Water mains: Replace with pipe equal in type and quality to that damaged. Repair sleeves shall be mechanical joint split sleeve.

C. Water services:
1. Pipe: Copper, ASTM B88 Type K. Replace entire section of pipe between main and curb box.
2. Provide corporation stops, curb stops, and service boxes complete with lid and plug as required.
3. If lead piping is encountered, contact Owner and record location. Damaged lead piping shall not be repaired. Replace with Type K copper where specified above.
4. Where curb box lids are located in new pavement, install flush with new pavement and provide plastic pipe sleeve in pavement.

3.15 REPAIR OF DAMAGED SANITARY AND STORM SEWERS

A. Contractor shall repair or replace breaks in existing sewers caused by construction operations. Provide temporary connections if required.

B. If pipe is damaged by construction operations such that it requires replacement, the following material shall be used:
1. Pipe:
a. PVC, ASTM D1785: Minimum Pressure Class for pipe less than 4” (100 mm): 46 psi.
b. Ductile iron; AWWA C151.

Pipe Size	Minimum Pressure Class
4” thru 12” (200 mm thru 300 mm)	350
14” thru 20” (350 mm thru 500 mm)	250
24” thru 64” (600 mm thru 1,600 mm)	200

2. Connections:
a. Flexible coupling in accordance with ASTM C425 for pipes 12” (300 mm) and smaller.
b. Concrete collar minimum of 12” (300 mm) either side of joint and 6” (150 mm) thick for pipes larger than 12” (300 mm).

C. Ductile iron replacement pipe shall extend minimum of 2’ (600 mm) beyond both sides of new sewer trench.

D. Provide positive slope to match existing sewer.

E. Separate payment will not be made for these repairs but will be considered incidental to construction of sewers.

3.16 REPAIR OF SANITARY SERVICE CONNECTIONS

A. Repair breaks in existing lines caused by construction operations.

B. Provide positive slope from house to sanitary sewer.

C. Pipe replacement material:
1. Pipe shall be minimum thickness AWWA C151, Pressure Class 350 ductile iron.
2. Joints: Push-on or mechanical.
3. Connection between existing service pipe and new repair pipe shall be by flexible couplings.
4. Each service connection replacement shall consist of at least 2 pieces of pipe with joint centered in pipe trench.
5. Size: Match existing.

3.17 MANHOLES

A. Standard manholes:

1. Conform to details shown.
2. 48” (1.2 m) and larger pipe base: Standard tee section (RCP). Pipe class same as main sewer.

B. Drop connections: Conform to details shown; use at locations shown.

C. Stub connections:
1. Provide where shown; make stub full length of pipe projecting from manhole at elevation shown.
2. Plug end with concrete stopper with joint similar to pipe; wedge 2” x 4” (50 mm x 100 mm) wood strut between stopper and wood block against wall of excavation.

D. Set manhole rims flush with pavement grade. Slope if required to match street profile or side slope.

3.18 FIELD QUALITY CONTROL

A. Gravity sewers, sanitary:
1. Conduct infiltration test on sewers located entirely below ground water table and conduct exfiltration test on sewers located partially or entirely above ground water table. Tests shall be conducted before connection of any sanitary services.
2. Manhole exfiltration test: Plug connecting pipes and fill sanitary sewer manhole with water to depth used in testing line or 6’ (1.8 m) minimum; allow water to stand minimum of 2 hours and refill to original elevation; after minimum of 30 minutes, record difference in elevation and convert to gallons per hour lost.
3. Maximum allowable exfiltration or infiltration: 100 gal/mile/inch (1.85 l/100m/01.0 mm) diameter of sewer per 24-hour day in any test section, including manholes.
4. Visible leakage at joints, or leakage in excess of that specified, shall be repaired at Contractor’s expense.
5. Furnish and install all plugs, measuring devices, and other equipment.
6. Maximum length of test section: 1,500’ (460 m).
7. Conduct tests in accordance with details shown.
8. Low pressure air testing may be used at Contractor’s option. Low pressure air test shall be in general accordance with:
   a. ASTM C828 for vitrified clay pipe.
   b. ASTM C924 for reinforced concrete pipe 24” (600 mm) and smaller.
   c. ASTM C1103 for reinforced concrete pipe larger than 24” (600 mm).
   d. ASTM F1417 for plastic and ductile iron pipe.
9. Replacement of existing sewers which have service connections may be exempted from leakage testing requirements.

B. Gravity sewers, storm:
1. No tests for leakage required.
2. Visually inspect interior joints; any joints or sections of line having defective pipe, poor joints, or excessive infiltration, shall be corrected at Contractor’s expense.

C. Gravity sewers, alignment test:
1. Check alignment by lamping, laser, or other approved survey method.
2. Sewers 15” (375 mm) and larger, maximum misalignment:
   a. Vertical: 0.20’ (60 mm).
   b. Horizontal: 0.50’ (150 mm).
3. Sewers smaller than 15” (375 mm): Lamp shall be visible through section of pipe lamped.
4. Misaligned, displaced, or otherwise defective sewer shall be repaired or replaced at Contractor’s expense.

D. Pressure mains and relocated water mains:
1. Furnish and install all materials and equipment necessary.
2. Flush out line before test to remove air; insert taps if necessary to blow off air trapped in line.
3. Pressure test for 2 hours at 100 psi (690 kPa) at lowest point in line under test; maximum pressure variation during test: 5 psi (35 kPa).

4. Leakage test: Perform concurrently with pressure test. Maintain 100 psi (690 kPa) pressure for 2 hours; measure water supplied to maintain test pressure within 5 psi (35 kPa) of test pressure by pumping from drum or by similar means. Compute maximum allowable leakage by formula.

$$L = \frac{SD\sqrt{P}}{133{,}200}$$

L = Maximum allowable leakage in gallons per hour
S = Length of pipe test in feet
D = Nominal pipe diameter in inches
P = Average test pressure, psig

5. Locate and repair or replace all defective pipe or fittings until leakage is within the specified allowance.

E. Flexible sewers, deflection test: Installed pipe deflection shall be tested by Contractor with rigid ball or 9-arm mandrel or other approved “Go-No Go” device. Sewer shall be tested no sooner than 30 days after backfilling. Pipe with deflection exceeding 5% shall be removed and replaced at no cost to Owner.

F. Air piping and digester gas piping: Test pneumatically, in accordance with ANSI B31.1 at pressures specified. Provide compressors, meters, gages, piping, fittings, accessories, and labor required to conduct tests.

G. Digester gas service valves shall be dry seat tested for gas service by manufacturer prior to shipment.

3.19 PIPING SCHEDULES

A. Refer to Piping Schedules specified and to SCI standards referenced. Pipe materials and accessories not specified by SCI standards are specified herein.

B. Deviation from piping specification:
1. If pipe wall thickness specified is not available, use next heavier wall thickness.
2. Allow 10% additional wall thickness for pipe wall thinning on steel pipe bends.

EXPOSED PIPING SCHEDULE

Piping System		Size, Inch	Test Pressure, psi	Pipe and Fittings			Valves	
Abbrev	Service			Material	Joints	Spec.	Type	Spec.
SH	Sodium Hypochlorite Carrier Hose	All	150	Reinforced Flexible PVC	Coupling	40 23 36	Ball	40 23 36
	Sodium Hypochlorite Carrier Pipe	All	150	CPVC	Solvent Welded	40 23 36	Ball	40 23 36
	Sodium Hypochlorite Containment Pipe	All	150	PVC	Solvent Welded	40 23 36		
D	Drain	<4		PVC	Solvent Welded	40 23 36	ball	40 23 36
		≥4	10	Ductile Iron	Flanged	40 23 36	plug	40 23 36
EW; EWD	Effluent Water, except where passing through wall.	<4	125	PVC, Stainless Steel Ductile Iron	Solvent Welded	40 23 36	ball	40 23 36
		≥4			Flanged	40 23 36	gate	40 23 36

EXPOSED PIPING SCHEDULE								
Piping System		Size, Inch	Test Pressure, psi	Pipe and Fittings			Valves	
Abbrev	Service			Material	Joints	Spec.	Type	Spec.
HW	Potable Hot Water					20 05 13	ball	20 05 23
HWS; HWR	Heating Water Supply and Return	All	150			20 05 13		20 05 23
POL	Liquid Polymer	All	150	PVC	Solvent Welded	40 23 36	ball	40 23 36
POS	Polymer Solution	All	125	PVC	Solvent Welded	40 23 36	ball	40 23 36
PW	Potable Water	All				20 05 13	ball	20 05 23
SL*	*Includes all TWAS, PS, SL, DS, TS, HS, and CS inside Digester Area, also decant piping, effluent water passing through walls.	All	100	Fiberglass Stainless Steel	Welded Flanged Grooved** Push-on	40 23 36	plug	40 23 36
STD	Storm Drain including Roof Drains					20 05 00		
V	Vent	<4 ≥4	10	PVC Ductile Iron	Solvent Welded Flanged	40 23 36 40 23 36	---	40 23 36 40 23 36

** Grooved joints shall be same type as specified in this Section for aeration air piping.

BURIED PIPING SCHEDULE								
Piping System		Size, Inch	Test Pressure psi	Pipe and Fittings			Valves	
Abbrev	Service			Material	Joints	Spec.	Type	Spec.
DS	Digested Sludge	All	150	Ductile iron	Push-on	40 23 36	ball	40 23 36
D	Drain	< 4 >=4	10	PVC Ductile iron	Push-on Push-on	40 23 36 40 23 36	Plug Plug	40 23 36 40 23 36
NG	Natural Gas	All	15			20 05 13	plug	20 05 23
PW	Potable Water					20 05 13		
SH	Sodium Hypochlorite Carrier Hose	All	150	Reinforced Flexible PVC	Coupling	40 23 36	Ball	40 23 36
	Sodium Hypochlorite Containment Pipe	All	150	PVC	Solvent Welded	40 23 36		

END OF SECTION

1) J. M. Brady

PART 1 GENERAL

1.01 SECTION INCLUDES

A. Electric, self-regulating heating cable and components for heat tracing and freeze protection of water, air, fuel, oil, and sewage lines.

1.02 INFORMATIONAL SUBMITTALS

A. Submit with Bid: Manufacturer's technical data/cut sheets on each product to be used.

1.03 ACTION SUBMITTALS

A. Shop Drawings: Submit after design and 30 days before shipment.
   1. Isometric drawings showing heater circuit, location of power connections, end terminations, tees, splices, and control schematic where applicable.
   2. Plan view drawings with dimensions.
   3. Calculations.
   4. Wiring and termination drawings.
   5. Heating cable voltage and ampacity.

B. Quality assurance data:
   1. Master drawing index.
   2. Interface coordination details.
   3. Component and accessories list.
   4. Ratings and nameplate information.
   5. Installation information.
   6. Certified production test reports.
   7. Test reports for previous design, and documentation showing previous design ratings and configurations.
   8. Documentation showing UL and FM system listing.
   9. Circuit breakdown table showing following for each circuit:
      a. Heater model number.
      b. Circuit length.
      c. Circuit breaker size.
      d. Steady-state amperage load of each circuit.
      e. Initial 1,000 volts dc Megger readings.
   10. Maximum heating MI cable sheath temperature calculations in accordance with either FM or CSA methods.

1.04 CLOSEOUT SUBMITTALS

A. Operation, maintenance, and installation manuals including one complete set of final drawings.
   1. General description and technical data.
   2. Receiving, storage, installation, and testing instructions.
   3. Operating and maintenance procedures.
   4. Complete documentation of inspections and tests performed, including any logs, curves, and certificates. Documentation shall note any replacement of equipment or components that failed during testing.
   5. Commissioning test plan and check-off list.
   6. "As-Built" Record Drawings: During system installation, maintain separate hard copy set of device location floor plan drawings, schematic wiring diagrams and point-to-point device wiring diagrams to be used for Record Drawings. Set shall be kept up to date, reflecting changes and additions made to system. Copies of final "as built" Record Drawings shall be provided to Owner in DWG format using latest version of AutoCAD.
   7. Warranty data.
   8. Spare parts lists.

1.05 QUALITY ASSURANCE

A. Manufacturer qualifications:
   1. ISO 9002 certified.
   2. Shall have produced similar electrical equipment for minimum period of five (5) years.
   3. When requested by Engineer, an acceptable list of installations with similar equipment shall be furnished.

B. Regulatory requirements:
   1. Design, manufacture, and test in accordance with minimum applicable requirements of Factory Mutual Research Corp. (FM), IEEE 515 and 622, NFPA 70, and UL 746B.
   2. Standards of foreign organizations shall not be used without written approval from Engineer.

1.06 WARRANTY

A. Heat trace components shall have nonprorated warranty against manufacturing defects for period of 10 years.

1.07 DELIVERY, STORAGE, AND HANDLING

A. Prepare detailed packing lists and shipping notification for items shipped.

B. During delivery and storage handle equipment to prevent damage, denting, or scoring.

C. Store equipment and their components in clean, dry place. Protect from weather, dirt, water, construction debris, and physical damage in accordance with manufacturer's instructions.

PART 2 PRODUCTS

2.01 MANUFACTURERS

A. Chromolox.

B. Raychem

C. Thermon.

D. Or equal.

2.02 SYSTEM DESCRIPTION

A. Design, fabricate, furnish, install, and test UL-listed and FM approved electric heat tracing system, including, but not limited to:
   1. Heating cables.
   2. Temperature sensors.
   3. Temperature controllers.
   4. Enclosures.
   5. Auxiliary equipment and controls.

B. Heat trace piping, drains, valves, traps, and accessories as indicated on P&ID(s), pipe code schedule, line list, mechanical insulation specification, or design drawings.

C. Instrument tubing shall be heat traced if connected to piping that is also heat traced.

D. Supply of materials related to power supply connections are covered in other sections.

E. Design equipment enclosure in accordance with seismic requirements listed in most recent local building codes and Data Sheets.

2.03 MECHANICAL CONSTRUCTION

A. Provide recommendation for attachment of equipment enclosure to foundation or structural supports with design drawings, as applicable. Method of attachment will take into account seismic requirements of job site as indicated on Data Sheets.

2.04 DESIGN REQUIREMENTS

A. Provide detailed design using standard heat-tracing design software. As minimum, design shall provide following:
1. Circuit identification number.
2. Maintain temperature.
3. Line size and insulation.
4. Heat loss for pipe, valves, and supports.
5. Amount and type of heating cable required.
6. Spiral requirements.
7. Heating cable service voltage.
8. Heating cable power output at maintain temperature.
9. Minimum and maximum maintain temperature vs. minimum and maximum ambient temperatures.
10. Circuit breaker and transformer sizing.

B. Coordinate heat tracing design with system design temperatures, insulation types, insulation thicknesses, and pipe supports, as indicated on drawings, pipe code schedule, line list, pipe support schedule, and mechanical specifications.

2.05 SELF-REGULATING HEATING CABLES

A. Heat-tracing systems for use at temperatures up to continuous exposure of 250°F (121°C) and intermittent exposure temperature of 420°F (215°C) shall use self-regulating type of heating cable.

B. Self-regulating heating cable shall vary its power output relative to temperature of surface of pipe or vessel. Design cable such that it can be crossed over itself and cut to length in field.

C. Design self-regulating heating cable for useful life of 20 years or more with "power on" continuously, based on following useful life criteria:
1. Retention of at least 75% of rated power after 20 years of operation at maximum published continuous exposure (maintain) temperature.
2. Retention of at least 90% of rated power after 1000 hours of operation at maximum published intermittent exposure temperature. Testing shall conform to UL 746B.

2.06 FREEZE PROTECTION SYSTEMS

A. Heating cable shall consist of two 16 AWG or larger nickel-plated copper bus wires, embedded in self-regulating polymeric core that controls power output so that cable can be used directly on plastic or metallic pipes. Cables shall have temperature identification number (T-rating) of T6 (185°F or 85°C) without use of thermostats.

B. Each heat tracer circuit shall have EPD (Equipment Protection Device) style breakers or controllers as an approved ground fault protection device.

C. Heating cable shall have tinned copper braid with resistance less than heating cable bus wire resistance as determined in type test (ASTM, B193, Sec. 5). Protect braid from chemical attack and mechanical abuse by modified polyolefin or fluoropolymer outer jacket.

D. To provide rapid heat-up, to conserve energy, and to prevent overheating of fluids and plastic pipe, heating cable shall have following minimum self-regulating indices. Self-regulating index is the rate of change of power output in watts per degree Fahrenheit or watts per degree Celsius, as measured between temperatures of 50°F (10°C) and 100°F (38°C) and confirmed by type test and published data sheets:

Heating Cable (Watt/ft)	S.R. Index (Watt/°F)	S.R. Index (Watt/°C)
3	0.038	0.068
5	0.060	0.108
8	0.074	0.133
10	0.100	0.180

E. To ensure self-regulating heating cable does not increase power output when accidentally exposed to high temperatures resulting in thermal runaway and self-ignition, cable shall produce less than 0.5 watt per foot (1.64 watts per meter) when energized and heated to 350°F (177°C) for 30 minutes. After test, if cable is reenergized, it shall not have an increasing power output leading to thermal runaway.

F. Self-regulating heating cable shall retain at least 90% of its original power output after having been cycled 300 times between 50°F (10°C) and 210°F (99°C), allowing at least 6 minutes of dwell time at each temperature.

G. Heating cable shall have continuous exposure (maintain) capability up to 150°F (65°C) and intermittent exposure capability up to 185°F (85°C).

2.07 PROCESS TEMPERATURE WITH NO STEAM EXPOSURE

A. Heating cable shall consist of two 16 AWG or larger nickel-plated copper bus wires, embedded in self-regulating polymeric core that controls power output so cable has temperature identification number (T-rating) of T4 (275°F or 135°C) without use of thermostats.

B. Each heat tracer circuit shall have EPD style breakers or controllers as an approved ground fault protection device.

C. Heating cable shall have tinned copper braid with resistance less than heating cable bus wire resistance as determined in type test (ASTM, B193, Sec. 5). Protect braid from chemical attack and mechanical abuse by fluoropolymer outer jacket.

D. Self-regulating heating cable shall retain at least 90% of its original power output after having been cycled 300 times between 50°F (10°C) and 300°F (110°C), allowing at least 6 minutes of dwell time at each temperature.

E. Heating cable shall have continuous and intermittent exposure capability up to 225°F (110°C).

2.08 SYSTEMS FOR DIVISION 1 CLASSIFIED HAZARDOUS LOCATIONS

A. Requirements are in addition to those specified above.

B. Self-regulating heating cable shall be specifically FM-approved or CSA-certified for use in Division 1 locations. All Class I, Div I designs must be reviewed by manufacturer.

C. Ground fault protection device set at 30 mA, with nominal 100 ms response time, shall be used to protect each circuit.

D. Temperature identification number (T-rating) of cable used shall comply with FM and CSA requirements as applicable.

E. Connection methods used with cable shall be compatible and approved as part of system manufactured and supplied by heating cable vendor for use in Division 01 location.

F. Heating cable shall have continuous and intermittent exposure capability up to 225°F (110°C). Heating cable shall have continuous exposure (maintain) capability up to 250°F (121°C) and intermittent exposure capability up to 420°F (215°C or 250 psi steam).

G. For plastic pipe and vessel applications, heating cable shall have continuous exposure capability up to 150°F (65°C) and intermittent exposure capability up to 185°F (85°C).

2.09 LONG LINE SYSTEMS

A. Freeze protection for distances between 500’ up to 1000’ (152 m up to 304 m).
   1. Heating cable shall consist of two 10 AWG nickel-plated copper bus wires embedded in self-regulating polymeric core that controls power output so that cable can be used directly on plastic or metallic pipes. Cables shall have temperature identification number (T-rating) of T6 (185°F or 85°C) without use of thermostats.
   2. Each heat tracer circuit shall have EPD style breakers or controllers as an approved ground fault protection device.
   3. For all 3-phase heating cables, a 70mA ground fault device is recommended to minimize nuisance tripping due to long heating cable lengths and high voltage heating cable.
   4. Heating cable shall have tinned copper braid with resistance less than heating cable bus wire resistance as determined in type test (ASTM, B193, Sec. 5). Protect braid from chemical attack and mechanical abuse by fluoropolymer outer jacket.
   5. Heating cable shall have continuous exposure capability up to 150°F (65°C) and intermittent exposure capability up to 185°F (85°C).

2.10 TERMINATIONS FOR SELF-REGULATING HEATING CABLES

A. Connection components used to terminate self-regulating heating cables, including power connectors, splices, tees, and connectors, shall be approved for respective area classification and approved as system with particular type of heating cable in use.

B. Do not use terminations which are manufactured by vendors other than cable manufacturer.

C. Power connection shall have an LED power indications

D. End Seal shall be an LED indicating type

E. Components shall be rated NEMA 4X.

2.11 MINERAL INSULATED CABLE SYSTEMS

A. Heat-tracing applications with continuous exposure (maintain) temperatures above 250°F (121°C) or intermittent exposure temperatures above 420°F (215°C) shall use factory-terminated, mineral-insulated-type (MI) cables.

B. MI cable shall be magnesium oxide insulated, with copper or alloy conductors and an Incoloy 825 sheath. Join heating section of cable to cold lead made of Incoloy 825.

C. Each cable shall be factory-terminated to required length, consisting of lengths required for pipe or equipment, plus an allowance for areas of additional heat loss such as valves flanges fittings, supports, and like, plus reasonable excess to allow for field variations. Cold lead section shall be 7’ (2.1m) long unless otherwise specified.

D. Maximum heating cable sheath temperature shall be in accordance with either FM or CSA method of calculation.

E. Ship each cable with catalog number marked on outside of package, and permanent metallic cable tag containing heating cable length, wattage, voltage, and current draw. If cable has been designed for hazardous location, tag shall also indicate area classification and heat-tracing circuit number.

2.12 THERMOSTATS AND CONTACTORS

A. Freeze protection systems shall operate using self-regulating control or with thermostat and contactor.

B. Provide required NEMA enclosure types for each installed location.

2.13 IDENTIFICATION AND TAGGING

A. Attach nameplates with self-tapping, stainless steel screws. Adhesive nameplates are not acceptable.

B. Lettering shall be black on white background.

2.14 SOURCE QUALITY CONTROL

A. Factory testing: Cables shall be capable of passing 2.5 kV dielectric test for one minute (ASTM D2633) after undergoing 0.5 kg-m impact (BS 6351, Part 1, 8.1.10).

PART 3 EXECUTION

3.01 INSTALLATION

A. Install in accordance with manufacturer's recommendations referenced practices, guidelines and applicable codes. Furnish necessary interconnections, services and adjustments required for a complete and operable system as specified. Install power conductors, control signals and grounding as necessary to preclude ground loops, noise and surges from adversely affecting system operation.

B. Where possible, install wiring in dedicated conduit throughout. Cable shall not be pulled into conduits or placed in raceways, compartments, outlet boxes, junction boxes, or similar fittings with other conductors.

C. Do not install heating circuits until pipes and equipment have met required tests including pneumatic leak tests.

D. Permanently fix signs to outside of finished thermal insulation for visibility from ground level. Sign shall read: "Electric Traced." Cabinets shall be labeled with identification as provided by Owner or their representative.

E. Installation shall be inspected by Owner or their representative and megger testing shall be completed before insulation is installed.

3.02 FIELD QUALITY CONTROL

A. Test procedure: Measure heater circuit continuity and insulation resistance between braid and bus wires with 2,500 volt dc megohmmeter. Energize system and demonstrate operation and functionality. Measure ampacity of circuit to verify value is approximately in accordance with design calculation.

B. Timing: Perform tests after pipe insulation has been installed and prior to installation of wall or ceiling panels.

C. Testing shall be witnessed by Owner or their representative.

D. Megger readings shall be independent of heater length. Circuits yielding unacceptable readings must be repaired or replaced.

E. Submit records of test data to Owner.

F. Correct any and all deficiencies observed during final check-off at no cost to Owner until equipment and system components operate properly.

G. Installation field reports shall be included in all maintenance, operation and installation manuals.

3.03 MANUFACTURER'S FIELD SERVICES

A. Maintain qualified field service engineer to assist installer in training, system commissioning, and basic troubleshooting.

DATA SHEETS SECURITY MANAGEMENT SYSTEM		**Equipment Name:** Belt Filter Press Exhaust Duct Exterior of Building **Tag No.: Rev.**	
DESCRIPTION	**UNITS**	**SPEC DATA**	**VENDOR DATA**
Manufacturer	-	By Manufacturer	
Catalog/Serial No.	-	By Manufacturer	
SITE ENVIRONMENTAL CONDITIONS			
Ambient Temperature	°F	Freeze Protection	
Altitude	Ft	650’	
Hazardous Area	Y/N	N	
Specific local Building Code and specific sections on seismic requirements used in equipment design	---	By Manufacturer	
Voltage	120/208/480	120	

END OF SECTION

1) J. N. Gavin
2) L. E. INGRAM

PART 1 GENERAL

1.01 SECTION INCLUDES

A. Provide supervision, labor, coordination, tools, material, equipment, and services required to perform commissioning and start-up of each respective item of equipment and systems furnished and/or installed as a part of this contract.

B. Provide supervision, labor, and assistance to manufacturer’s field representative and technical directors of installation for equipment installed as a part of this Contract. Follow specified procedures and instructions provided by these representatives. Representatives will not be present at all times. Owner or Owner's Representative will determine when representatives are required.

C. Provide construction labor required for commissioning process necessary to support schedule as determined by Owner or Owner's Representative, including initial total plant startup.
   1. Plant startup will proceed on a schedule determined by Owner or Owner's Representative and may entail 24-hour per day activity until startup is complete.
   2. Owner will provide operators for commissioning process. Owner or Owner's Representative will determine when startup has been completed.
   3. Startup refers not only to startup of total plant but also to individual systems requiring checkout prior to total plant startup.

D. Verify operation performance of equipment and associated accessories for compliance, as described in Contract Documents.

E. Document test inspections.

F. Verify application of operation and maintenance manuals, record documents, spare parts listings, and other items as may be specified for supporting of piping systems and equipment.

1.02 ACTION SUBMITTALS

A. Quality assurance data:
   1. Commissioning responsibilities list including breakdown of each trades responsibilities during commissioning activities.
   2. Sample documentation for tests and inspections required by Code Authorities.

1.03 CLOSEOUT SUBMITTALS

A. Record documents:
   1. Provide alignment and vibration tolerances and readings after adjustments for devices and systems defined below.
   2. Provide instrument calibration reports for each field and panel device furnished and/or installed as part of this contract. Completed calibration reports shall include, but not be limited to:
      a. Equipment: Instrument tag number, manufacturer, model number and serial number. For valves, include fail position, model number of actuator, model number of positioner (if included) and power requirements.
      b. Service: Application, building, floor, and area.
      c. Test data: Test equipment used, test performance data for instrument in "As Found" and "As Left" conditions.
      d. Date of calibration and name of individual performing calibration.

1.04 QUALITY ASSURANCE

A. Assure participation and cooperation of specialty contractors under its jurisdiction as required for commissioning process.

B. Check-out each piece of equipment and each system with approved checklist to ensure Contract Document conformance prior to start-up.

C. Keep track of commissioning activities with acceptance for operation checklist. Refer to mechanical and electrical technical specifications for specific requirements and [MH1] for individual equipment and component requirements.

D. Develop detailed commissioning documents for Owner's approval.

E. Conform to Owner's plant operating procedures for commissioning and startup of equipment.
   1. Notify Owner, in writing, 1 day in advance of commissioning of equipment or systems.
   2. Notify Owner, in writing, 1 day in advance of startup of equipment or systems upon completion of commissioning process.
   3. Upon completion of start-up, equipment or systems shall be turned over to Owner and tagged as accepted. No additional work on or operation of equipment or systems shall be allowed by Contractor without written consent of Owner.

PART 2 PRODUCTS

2.01 MATERIALS

A. Piping system joint leak testing compound: "Leak-Tek," or equal.

B. Anti-rust compound for packing gland threads and valve stems: "Moly-Cote" or "Fel-Pro."

2.02 TEST EQUIPMENT

A. Provide test equipment required for commissioning and startup of equipment.

B. Provide and maintain tools and test equipment in first-class condition and quantities sufficient to assure timely, successful performance and completion of required Work.

C. Test equipment shall have recent calibration checks by equipment manufacturer or authorized facility to assure accuracy of commissioning process.

PART 3 EXECUTION

3.01 SITE VERIFICATION OF CONDITIONS

A. Installation verification:
   1. Prior to system start-up, the Contractor, Owner, and Owner's Representative shall conduct final installation verification audit. Contractor shall be responsible for completeness of work to Owner's satisfaction including change orders and punch list items. Audit shall include, but not be limited to, checking of:
      a. Piping specialties including balancing, control, and isolation valves.
      b. Control sensor types and locations.
      c. Identification of piping, valves, equipment, controls, etc.
      d. Major equipment, fans, valves, starters, gages, thermometers, etc.
      e. Documentation of prestart-up tests performed, including manufacturer's factory tests.
   2. If Work is found to be incomplete, incorrect, or nonfunctional, Contractor shall take corrective action before system start-up work proceeds. If during system start-up additional items are found, Contractor shall take corrective action before system start-up is completed.

B. Operation verification:
   1. After system equipment, wiring, piping, and component installation has been verified, system start-up and calibration shall commence.
   2. Contractor shall be responsible for operation and control of installed systems.
   3. During system checkout, operation checklist shall be filled out to verify system operation.
   4. Owner and/or Owner's Representative shall verify system operation with responsible Contractor.

3.02 EQUIPMENT COMMISSIONING

A. Bearings:
   1. Inspect for cleanliness; clean and remove foreign materials.
   2. Verify alignment.

B. Drives:
   1. Inspect for cleanliness; clean and remove foreign materials before starting operation.
   2. Adjust drives for all alignment of sheaves, V-belts, and couplings.
   3. Adjust tension in V-belt drives, and adjust varipitch sheaves and drives for proper equipment speed.

C. Lubrication:
   1. Lubricants for initial operation shall be furnished by Contractor.
   2. Lubricants required for storage and flushing of equipment furnished shall be furnished by Contractor.
   3. Lubricate bearings and fill oil reservoir prior to operation. Perform lubrication in accordance with manufacturer's recommendations.
   4. After Contractor lubricates equipment, Contractor shall affix a tag to equipment stating lubricant used, quantity, date lubricated, and name of person lubricating equipment.
   5. Submit 2 volumes of lubrication requirements to Owner at site for each item of equipment furnished requiring lubrication.

D. Motors:
   1. Check each motor for amperage comparison to nameplate value.
   2. Correct conditions which produce excessive current flow, and which exist due to equipment malfunction.

E. Pumps:
   1. Check mechanical seals and packing for cleanliness and adjustment before running pump.
   2. Verify that pump and connecting piping are free of dirt, debris, and scale before circulating liquid through pump.
   3. Check running clearances.

F. Inspect fan wheels for clearance and balance. Provide factory authorized personnel for adjustment when needed.

G. Remove any rust, scale, and foreign materials from equipment and renew defaced surfaces.

3.03 PIPING SYSTEMS COMMISSIONING

A. Check settings of pipe hangers.

B. Check piping for leaks at every joint, and at every screwed, flanged, or welded connection, using approved compound.
   1. Examine flanged joints:
      a. Tighten flanges after system has been placed in operation.
      b. Replace flange gaskets that show any sign of leakage after tightening.
   2. Inspect screwed joints:
      a. Promptly remake each joint that appears to be faulty; do not wait for rust to form.
      b. Clean threads on both parts, apply compound, and remake joints.

C. Vent gasses trapped in any part of liquid systems. Verify that liquids are drained from all parts of gas or air systems.

D. After system has been placed in operation:
   1. Clean strainers, dirt pockets, orifices, valves seats, and headers in fluid systems, to assure they are free of foreign materials.

2. Open steam traps and air vents; remove operating elements. Clean thoroughly, reinstall internal parts and put back into operation.

E. Repair damaged insulation.

3.04 INSTRUMENT PIPING COMMISSIONING

A. Branch instrument air headers shall be blown down and leak tested prior to time air is admitted to any instrument. Purpose of blowing down header is to remove moisture, foreign particles, etc., to assure cleanliness of header. Larger outlets shall be blown first and ultimately each supply line shall be disconnected at instrument and blown.
   1. In testing branch headers, pressurize header to 120 lb, close valves, and observe pressure loss during 30-minute period. A loss of greater than 2% will be considered excessive.
   2. If leakage is excessive, perform bubble test to locate leaks in main header, and at joints in individual instrument supply lines.
   3. Perform necessary repairs to air header and retest until satisfactory.

B. Pneumatic tubing circuits shall be blown down and tested for continuity, restrictions, tightness, and elimination of leaks.
   1. Test for continuity, restrictions, and plugging shall consist of applying 35 psig air supply to input end of tubing under test, with tubing disconnected from instruments and open to atmosphere.
   2. Reasonable flow of air shall be present at open end of tubing. If tubing leads to more than 1 unit or piece of equipment, same procedure shall be followed at each unit after reconnecting tubing to previous unit.
   3. Test for tightness and elimination of leaks shall be that outlined in procedure entitled "Pneumatic Control Circuit Pressure Test," latest revision, Recommended Practice, RP7.1, of Instrument Society of America.
   4. Wherever possible, instrument or instruments at outlet end of tubing shall remain connected to tubing during test so that instrument may be tested simultaneously, provided instrument has suitable pressure rating.
   5. Appropriate allowances shall be made in extending duration of length of test to offset additional volume of instrument. Where tubing terminates in large valve diaphragm housing or other large volume, tubing may be disconnected, plugged, and tested.
   6. After tubing test has been completed, tubing shall be reconnected to various units involved, and broken connections shall be bubble-tested.
   7. In testing diaphragm control valves or other large volumes for leaks, use small rotameter and 35 psig air supply. Rate of flow indicated by rotameter shall not exceed 5.0 std. cc/min. of air.
   8. In event instrument air is not available during time that commissioning is required, supply instrument quality air from portable compressor or bottled dry air or nitrogen.

3.05 CONTROLS AND INSTRUMENTATION COMMISSIONING

A. Check out controls and instruments prior to start-up to assure in situ performance in accordance with Contract Documents under simulated operating conditions. Contractor to determine initial start-up conditions.

B. Prior to commissioning:
   1. Remove shipping stops from instruments before starting with procedures specified.
   2. Contractor shall have instruction manuals available.
   3. Install miscellaneous components including charts, illumination, mercury, etc., furnished separately.
   4. Verify nameplate data with respect to conditions of range, operating temperature, specific gravity, and components as stated on unit specifications. Discrepancies shall be immediately called to attention of Owner and report of its condition confirmed in writing.

C. Commissioning responsibilities:
   1. Verify instrument installation in conformance with manufacturer's recommendations.
   2. Follow manufacturer's recommendations for calibrating control system components including instruments, switches, valves, etc.

a. Calibrate instruments individually and where applicable, as system (i.e. transmitter, controller and control valve).
b. Verify control system components calibration meets published accuracies over full operational range.
c. Defective equipment: If any instrument cannot be properly adjusted or does not meet manufacturer's specifications, immediately call to attention of Owner and report of its condition confirmed in writing. Repair or replace equipment furnished as part of this contract.
d. Calibration of supplementary supply and output pressure gages contained on instruments will not be required. Follow defective equipment guidelines if gage is found to be faulty.

3. Complete calibration report form for each instrument and control device.
4. Calibration Stickers: Upon successful calibration, affix calibration sticker to instrument or control component. Calibration sticker shall contain equipment identification number, calibrated range or switch set and reset conditions, date of calibration, due date for next calibration, and name of person performing calibration.
5. Check instrument and control wiring for proper operation.
   a. After energizing and prior to start-up, check control circuits and programs for proper sequence of operations and interlocking functions.
   b. Correct any wiring changes required as result of checks including properly changing terminal strip and/or wiring markers, and associated documentation including schematics and termination diagrams.

D. Test procedures:
1. Analog devices: Include 9-point span test (0%, 25% increasing, 50% increasing, 75% increasing, 100%, 75% decreasing, 50% decreasing, 25% decreasing, 0%) verifying linearity and hysteresis meets specified values.
2. Discrete devices: Use multiple state changes to verify set point, reset point, and deadband.

E. Acceptable calibration standards:
1. Vacuum or draft:
   a. 0" to 5" w.c.: Inclined water-filled manometer graduated in hundredths of inches of water.
   b. 5" to 25" Hg: Mercury manometer graduated in tenths of inches of mercury.
   c. 5" to 60" w.c.: Water manometer graduated in tenths of inches of water.
   d. Electronic: Digital manometer, ±0.25% full scale accuracy, 3.5-digit LCD display, ranges of 0 to 19.99" w.c. and 0 to 199.9" w.c., ±1 LSD.
2. Pressure:
   a. 0" to 5" w.c.: Inclined water-filled manometer graduated in hundredths of inches of water.
   b. 5" to 60" w.c.: Water manometer graduated in tenths of inches of water.
   c. 3 to 25 psig: Mercury manometer graduated in tenths of psi.
   d. 25 to 150 psig: Precision pressure gage, 0-160 psi, 1/4 of 1% accuracy, 8-1/2" dial minimum.
   e. 150 to 750 psig: Precision pressure gage, 0-800 psi, 1/2 of 1% accuracy, 8-1/2" dial minimum.
   f. 750 to 2,750 psig: Precision pressure gage, 0-3,000 psi, 1/2 of 1% accuracy, 8-1/2" dial minimum.
   g. Electronic: Digital manometer, ±0.1% full scale accuracy, 3.5-digit LCD display, ranges of 0 to 19.99 psig, 0 to 199.9 psig, and 0 to 1,999 psig, ±1 LSD.
3. Differential:
   a. 0" to 5" w.c.: Inclined water-filled manometer graduated in hundredths of inches of water.
   b. 5" to 300" w.c.: Mercury manometer graduated in tenths of inches of water.
   c. 5 to 25 psig: Mercury manometer graduated in tenths of psi.
   d. Above 25 psig: Use pressure gages specified.
   e. Electronic: Digital differential manometer, ±0.1% full scale accuracy, 5-digit LCD display, ranges of 0 to 200" w.c. and 0 to 2,000" w.c., ±1 LSD.
4. Temperatures:
   a. -20 to 250ºF: Laboratory thermometers of suitable range.
   b. Other ranges: Use thermocouple and precision potentiometer.
   c. Electronic: Digital thermometer, ±0.1% of reading accuracy, 4-digit LCD display, ±1 LSD.
5. DC process signal calibrator: 2-wire transmitter simulator:
   a. 4-20 mA range: ±0.5% full scale accuracy, 4-digit LCD display, ±1 LSD.
   b. 10-50 mA range: ±0.06% full scale accuracy, 4.5-digit LED display, ±1 LSD.

3.06 PANEL MOUNTED INSTRUMENTS

A. Receiver instruments: Perform 9-point span test (0%, 25% increasing, 50% increasing, 75% increasing, 100%, 75% decreasing, 50% decreasing, 25% decreasing, 0%) verifying linearity and hysteresis by impressing measured signal into input or signal connections on instrument.

B. Controllers (panel or control room mounted):
   1. Check for proper operation and adjust in accordance with manufacturer's instructions. Vary process input signal and check output signal for direction.
   2. Set initial proportional band, reset rate, and rate time as recommended by manufacturer. It may be necessary to determine process dynamics in actual operation before settings can be made.
   3. Control loops shall be observed for operability and conformance to Specifications by impressing simulated input signal at primary element and checking response of final control element.

C. Integrators, ratio relays, etc.:
   1. Check in conformance to manufacturer's recommendations. Receiver integrators shall be calibrated for proper operation and multiplication factor by feeding maximum input signal for specified period of time with stopwatch.
   2. Check in conformance to manufacturer's recommendations. Ratio signals shall be simulated to check proper ratio settings and output.

D. Graphics panel: If possible, trip each alarm actuator (field device) in sequence and observe Graphics. Check "acknowledge" and "test" pushbuttons.

3.07 ACCEPTANCE FOR OPERATION

A. Each piece of equipment installed by this contract shall carry "Acceptance for Operation Checklist." Each checklist shall be signed by the Contractor's Representative and Owner, or Owner's Representative. Each list shall have applicable blanks filled in and attached to items indicating that it is prepared for operation.

B. Owner will accept equipment and systems for operation when construction has been substantially completed by Contractor. "Acceptance for Operation" shall mean Owner will assume operational and routine maintenance duties. "Acceptance for Operation" does not relieve Contractor from responsibilities related to defective materials and workmanship; neither does it constitute final acceptance of materials and equipment.

C. After Owner has accepted a system for operation, Contractor shall continue to perform following as requested and scheduled by Owner at no additional cost to Owner until final acceptance:
   1. Troubleshooting, adjustments, and repairs until system operation and performance is acceptable.
   2. Assist instrument and control personnel with instrument calibration.
   3. Craft labor as required.

D. After Owner has accepted a system for operation, Contractor shall continue to supply technical services when needed until final acceptance.

3.08 TRAINING

A. Coordinate and direct training of personnel for operation and maintenance of systems and equipment specified.

B. Provide Owner's selected staff with adequate training to fully operate and maintain the individual systems. Training shall be in accordance with the Contract Documents.

END OF SECTION

1) Z. M. Carter
2) S. A. Warren

PART 1 GENERAL

1.01 RELATED REQUIREMENTS

A. Section 40 96 15 – Control System Operational Description.

PART 2 PRODUCTS

NOT USED

PART 3 EXECUTION

3.01 PLC INPUT/OUTPUT LISTING

A. Refer to attached PLC Input/Output Listing for I/O listing.

B. Attached I/O List shall be a guide for bidding purposes, and may not include all necessary hard and soft I/O for a complete system.
   1. For Belt Filter Press systems, the attached I/O Listing includes typical I/O for a single BFP unit (BFP-1) for clarity, rather than duplicating for BFP-2 and BFP-3. I/O Listing is based on Charter Machine Company's Typical Controls literature, and may require fewer or more points and/or alternate signal parameters.
   2. I/O List includes typical I/O for interlock between existing HVAC exhaust fan controller, new BFP exhaust odor scrubber control and existing SCADA. Specific interconnections shall be determined in the field. See Section 40 96 15 for Control System Operational Description.

C. I/O tags
   1. I/O tags shall be reused, where applicable.
   2. No I/O tags are provided on attached I/O List, only descriptions and signal types.
   3. Any new I/O tags shall be coordinated with Owner.

3.02 PLC INPUT/OUTPUT LISTING:

A. Sort Order: PLC Input/Output Listing is sorted by Panel, then by I/O Type and then by Service Description.

B. Tag No.: Defines unique alphanumeric identifier of input/output point.

C. PID No.: Not Used.

D. Rev.: Indicates current revision of I/O point.
   1. Add - I/O point added to contract in specified revision.
   2. Del - I/O point deleted from contract.

E. Service Description: Description of I/O points service function.

F. I/O Type: Identifies I/O points as analog or discrete and input or output relative to control system.
   1. Hardwire:
      a. AI - Analog Input.
      b. AO - Analog Output.
      c. DI - Discrete Input.
      d. DO - Discrete Output.
      e. RO - Relay Output.
      f. RTD - Resistance Temperature Detectors.
      g. SOE - Sequence of Events.
      h. TC - Thermocouple Input.

2. Serial:
   a. VAI - Analog Input.
   b. VAO - Analog Output.
   c. VDI - Discrete Input.
   d. VDO - Discrete Output.
   e. VSOE- Sequence of Events.

G. Signal:
   1. Analog: 4 - 20 mA.
   2. Thermocouple: Type E.
   3. RTD:
      a. 100-ohm Pt.
   4. Digital: N.O. MAIN, N.C. MAIN, N.O. MOM, or N.C. MOM, where:
      a. Contact type: N.O. (Normally Open) or N.C. (Normally Closed).
      b. State: MAIN (maintained) or MOM (momentary).

H. Voltage: Defines voltage utilized for I/O point. For relay outputs, voltage refers to what is applied to relay contacts (as opposed to what voltage is applied to relay coil).
   1. 24 volt-dc.
   2. 120 volt-ac.

I. Origin:
   1. System – sourced from control system.
   2. Field – externally powered.

J. Calib Range: Lists I/O points calibrated range in engineering units.

K. Display Range: Lists I/O points display range in engineering units.

L. “0” / “1” State: For digital I/O, lists conditions for zero state and one state (i.e., “0” state = NOPEN when valve is in not open position, and “1” state = OPEN when valve is in open position).

M. Panel: Defines panel where I/O point assigned.
   1. BFP#-MCP. (Main or Master BFP Control Panel, typical of three (3).)
      a. Where # = 1, 2 or 3 for respective BFP unit.
   2. SCADA. (Existing SCADA interface panel(s).)
      a. At minimum, existing panel with Ethernet Switch capacity and hardwire capacity is South Sludge Processing Station SSPRS Control Panel, located adjacent to BFP Master Control Panels; otherwise, coordinate other SCADA interface panel use with Owner.)

N. Alarm setpoints:
   1. AH / AHH: Lists I/O point alarm high (AH) and alarm high-high (AHH) setpoints.
   2. AL / ALL: Lists I/O point alarm low (AL) and alarm low-low (ALL) setpoints.

O. Software Functions: Not used on I/O List. New BFP I/O shall replicate existing respective I/O software functions (status, alarm, indicating, trending, etc.)

P. COMMENTS - Indicates any additional special requirements or features for a particular I/O point.
   1. Common comments:
      a. “Charter Basic Proposal” indicates I/O based on BFP manufacturer’s basic control scheme, less extended-system equipment such as BFP feed pump and BFP discharge conveyor I/O, which shall be reintegrated as appropriate for a complete system.

END OF SECTION

1) Z. M. Carter
2) S. A. Warren

TAG NO. / PID NO. / REV.	SERVICE DESCRIPTION	I/O TYPE	SIGNAL / VOLTAGE / ORIGIN	CALIB RANGE / DISPLAY RANGE / "0" / "1" STATE	PANEL	ALARM SETPOINTS AH / AHH / AL / ALL	COMMENTS
	BFP BELT BROKEN	DI	N.C. MAIN 120 VAC SYSTEM	NBROKE / BROKEN	BFP1-MCP	/ /	CHARTER BASIC PROPOSAL. EST. QTY: 3
A							
	BFP BELT OVERTRAVEL	DI	N.C. MAIN 120 VAC SYSTEM	NOVRTVL / OVRTVL	BFP1-MCP	/ /	CHARTER BASIC PROPOSAL. EST. QTY: 3
A							
	BFP DEWATERING MODE THICKENER/PRESS	DI	N.O. MAIN 120 VAC SYSTEM	THICKNR / PRESS	BFP1-MCP	/ /	CHARTER BASIC PROPOSAL. EST. QTY: 3
A							
	BFP FAULT	DI	N.C. MAIN 120 VAC SYSTEM	NFAULT / FAULT	BFP1-MCP	/ /	CHARTER BASIC PROPOSAL. EST. QTY: 3
A							
	BFP HOA SWITCH IN AUTO	DI	N.O. MAIN 120 VAC SYSTEM	NAUTO / AUTO	BFP1-MCP	/ /	CHARTER BASIC PROPOSAL. EST. QTY: 3
A							
	BFP POSTWASH CYCLE ON	DI	N.O. MAIN 120 VAC SYSTEM	NON / ON	BFP1-MCP	/ /	CHARTER BASIC PROPOSAL. EST. QTY: 3
A							
	BFP PREWET CYCLE ON	DI	N.O. MAIN 120 VAC SYSTEM	OFF / ON	BFP1-MCP	/ /	CHARTER BASIC PROPOSAL. EST. QTY: 3
A							
	BFP RUNNING	DI	N.O. MAIN 120 VAC SYSTEM	NRUNNG / RUNNG	BFP1-MCP	/ /	CHARTER BASIC PROPOSAL. EST. QTY: 3
A							
	BFP TENSIONER HYDRAULIC PRESSURE OK	DI	N.C. MAIN 120 VAC SYSTEM	NOK / OK	BFP1-MCP	/ /	CHARTER BASIC PROPOSAL. EST. QTY: 3
A							
	BFP TENSIONER HYDRAULIC PUMP RUNNING	DI	N.O. MAIN 120 VAC SYSTEM	NRUNNG / RUNNG	BFP1-MCP	/ /	CHARTER BASIC PROPOSAL. EST. QTY: 3
A							
	BFP TENSIONER HYDRAULIC UNIT ON/OFF	DI	N.O. MAIN 120 VAC SYSTEM	OFF / ON	BFP1-MCP	/ /	CHARTER BASIC PROPOSAL. EST. QTY: 3
A							
	BFP WASHWATER PUMP RUNNING	DI	N.O. MAIN 120 VAC SYSTEM	NRUNNG / RUNNG	BFP1-MCP	/ /	CHARTER BASIC PROPOSAL. EST. QTY: 3
A							

TAG NO. / PID NO. / REV.	SERVICE DESCRIPTION	I/O TYPE	SIGNAL VOLTAGE ORIGIN	CALIB RANGE DISPLAY RANGE "0" / "1" STATE	PANEL	ALARM SETPOINTS AH / AHH AL / ALL	COMMENTS
	BFP ALARM SILENCE	DO	N.O. MOM 120 VAC		BFP1-MCP	/	CHARTER BASIC PROPOSAL.
A			SYSTEM	NSILENC / SILENCE		/	EST. QTY: 3
	BFP SYSTEM RESET	DO	N.O. MOM 120 VAC		BFP1-MCP	/	CHARTER BASIC PROPOSAL.
A			SYSTEM	NRESET / RESET		/	EST. QTY: 3
	BFP WASHWATER PUMP START COMMAND	DO	N.O. MAIN 120 VAC		BFP1-MCP	/	CHARTER BASIC PROPOSAL.
A			SYSTEM	NSTART / START		/	EST. QTY: 3
	BFP WASHWATER PUMP STOP COMMAND	DO	N.O. MAIN 120 VAC		BFP1-MCP	/	CHARTER BASIC PROPOSAL.
A			SYSTEM	NSTOP / STOP		/	EST. QTY: 3
	BFP BELT DRIVE SPEED FEEDBACK	VAI		0 to 100 %	BFP1-MCP	/	ETHERNET.
A				/		/	EST. QTY: 3
	BFP GRAVITY BELT SPEED FEEDBACK	VAI		0 to 100 %	BFP1-MCP	/	ETHERNET.
A				/		/	EST. QTY: 3
	BFP BELT DRIVE SPEED COMMAND	VAO		0 to 100 %	BFP1-MCP	/	CHARTER BASIC PROPOSAL. ETHERNET.
A				/		/	EST. QTY: 3
	BFP GRAVITY BELT SPEED COMMAND	VAO		0 to 100 %	BFP1-MCP	/	CHARTER BASIC PROPOSAL. ETHERNET.
A				/		/	EST. QTY: 3
	BFP BELT DRIVE RUNNING	VDI			BFP1-MCP	/	CHARTER BASIC PROPOSAL. ETHERNET.
A				NRUNNG / RUNNG		/	EST. QTY: 3
	BFP GRAVITY BELT DRIVE RUNNING	VDI			BFP1-MCP	/	CHARTER BASIC PROPOSAL. ETHERNET.
A				NRUNNG / RUNNG		/	EST. QTY: 3
	BFP AUTO START COMMAND	VDO			BFP1-MCP	/	CHARTER BASIC PROPOSAL. ETHERNET.
A				NASTART / ASTART		/	EST. QTY: 3
	BFP AUTO STOP COMMAND	VDO			BFP1-MCP	/	CHARTER BASIC PROPOSAL. ETHERNET.
A				NASTOP / ASTOP		/	EST. QTY: 3

TAG NO. PID NO. REV.	SERVICE DESCRIPTION	I/O TYPE	SIGNAL VOLTAGE ORIGIN	CALIB RANGE DISPLAY RANGE "0" / "1" STATE	PANEL	ALARM SETPOINTS AH / AHH AL / ALL	COMMENTS
	BFP BELT DRIVE START COMMAND	VDO			BFP1-MCP		CHARTER BASIC PROPOSAL.
						/	ETHERNET.
A				NSTART / START		/	EST. QTY: 3
	BFP BELT DRIVE STOP COMMAND	VDO			BFP1-MCP		CHARTER BASIC PROPOSAL.
						/	ETHERNET.
A				NSTOP / STOP		/	EST. QTY: 3
	BFP GRAVITY BELT DRIVE START COMMAND	VDO			BFP1-MCP		CHARTER BASIC PROPOSAL.
						/	ETHERNET.
A				NSTART / START		/	EST. QTY: 3
	BFP GRAVITY BELT DRIVE STOP COMMAND	VDO			BFP1-MCP		CHARTER BASIC PROPOSAL.
						/	ETHERNET.
A				NSTOP / STOP		/	EST. QTY: 3

TAG NO. / PID NO. / REV.	SERVICE DESCRIPTION	I/O TYPE	SIGNAL VOLTAGE ORIGIN	CALIB RANGE DISPLAY RANGE "0" / "1" STATE	PANEL	ALARM SETPOINTS AH / AHH AL / ALL	COMMENTS
A	BFP DISCHARGE CONVEYOR RUNNING	DI	N.O. MAIN 120 VAC SYSTEM	NRUNNG / RUNNG	SCADA	/ /	CHARTER BASIC PROPOSAL. EST. QTY: 1
A	BFP FEED PUMP FAIL	DI	N.C. MAIN 120 VAC SYSTEM	NFAIL / FAIL	SCADA	/ /	CHARTER BASIC PROPOSAL. EST. QTY: 3
A	BFP FEED PUMP RUNNING	DI	N.O. MAIN 120 VAC SYSTEM	NRUNNG / RUNNG	SCADA	/ /	CHARTER BASIC PROPOSAL. EST. QTY: 3
A	BFP ODOR SCRUBBER COMMON ALARM	DI	N.O. MAIN 120 VAC TBD	NALARM / ALARM	SCADA	/ /	SEE SPECIFICATION 40 96 15. EST. QTY: 1
A	BFP ODOR SCRUBBER RUNNING STATUS FROM SCRUBBER	DI	N.O. MAIN 120 VAC TBD	NRUNNG / RUNNG	SCADA	/ /	SEE SPECIFICATION 40 96 15. EST. QTY: 1
A	POLYMER PUMP FAIL	DI	N.C. MAIN 120 VAC SYSTEM	NFAIL / FAIL	SCADA	/ /	CHARTER BASIC PROPOSAL. EST. QTY: 4
A	POLYMER PUMP RUNNING	DI	N.O. MAIN 120 VAC SYSTEM	NRUNNG / RUNNG	SCADA	/ /	CHARTER BASIC PROPOSAL. EST. QTY: 4
A	BFP FEED PUMP START COMMAND	DO	N.O. MAIN 120 VAC SYSTEM	NSTART / START	SCADA	/ /	CHARTER BASIC PROPOSAL. EST. QTY: 3
A	BFP FEED PUMP STOP COMMAND	DO	N.O. MAIN 120 VAC SYSTEM	NSTOP / STOP	SCADA	/ /	CHARTER BASIC PROPOSAL. EST. QTY: 3
A	BFP ODOR SCRUBBER ENABLE COMMAND	DO	N.O. MAIN 120 VAC TBD	NENABL / ENABL	SCADA	/ /	SEE SPECIFICATION 40 96 15. EST. QTY: 1
A	BFP ODOR SCRUBBER RUNNING STATUS TO HVAC INTERLOCK	DO	N.O. MAIN 120 VAC TBD	NRUNNG / RUNNG	SCADA	/ /	SEE SPECIFICATION 40 96 15. EST. QTY: 1
A	POLYMER PUMP START COMMAND	DO	N.O. MAIN 120 VAC SYSTEM	NSTART / START	SCADA	/ /	CHARTER BASIC PROPOSAL. EST. QTY: 4

TAG NO. PID NO. REV.	SERVICE DESCRIPTION	I/O TYPE	SIGNAL VOLTAGE ORIGIN	CALIB RANGE DISPLAY RANGE "0" / "1" STATE	PANEL	ALARM SETPOINTS AH / AHH AL / ALL	COMMENTS
	POLYMER PUMP STOP COMMAND	DO	N.O. MAIN 120 VAC		SCADA	/	CHARTER BASIC PROPOSAL.
A			SYSTEM	NSTOP / STOP		/	EST. QTY: 4

PART 1 GENERAL

1.01 SECTION INCLUDES

A. Control system configuration standards.

B. Control system description.

1.02 RELATED REQUIREMENTS

A. Section 40 05 00 – Common Work Results for Process Systems.

B. Section 40 94 43-13 – PLC Input / Output Listing.

1.03 CLOSEOUT SUBMITTALS

A. Record Documents: Logic update drawings.

1.04 QUALITY ASSURANCE

A. Integrator shall implement logic in accordance with existing equipment being replaced, modified as required for new equipment. See Part 3 of this Specification Section for Integrator contact information.

B. Equipment replaced in kind shall reuse equipment, instrument and relevant I/O tags, as coordinated with owner. New tags, as necessary, shall be coordinated with owner.

PART 2 PRODUCTS

2.01 CONFIGURATION STANDARDS

A. Following subparagraphs are standard and apply as required for complete project.

B. Analog controllers:
   1. Each software controller consists of proportional-integral-derivative (PID) control algorithm and Auto-Manual station.
   2. With station in “Manual,” operator directly determines value of controller output signal and controller disabled to prevent windup.
   3. With station in “Auto,” controller generates control output (CO) signal to minimize difference (error) between process variable (PV) and setpoint (SP).
   4. Controller shall provide bumpless transition between “Auto” and “Manual” positions.
   5. Controller types:
      a. Direct acting: Increases output signal when process variable greater than setpoint.
      b. Reverse acting: Decreases output signal when process variable greater than setpoint.
   6. When controller service off-line, controller output forced to “0” placing controlled device in de-energized position.

C. Signal select logic:
   1. Process variable signals processed as required for input to software controller when more than one transmitter installed.
      a. Low.
      b. High.
      c. Average.
      d. Median.
   2. Each logic select control block consists of following:
      a. Two or three process inputs.

b. Signal select logic:
   1) Compares process input values and determines logic signal.
   2) During normal operation, desired logic signal selected as block output.
c. Software selector switch: Allows operator to choose between process inputs and selected signal.
d. Deviation, low, and high alarms:
   1) Logic compares each process value with selected signal for deviations.
   2) If logic detects deviation of 5% or greater for 1 process input, system alarms operator of process input malfunction.
   3) When 3 process inputs used, if logic shows 5% or greater for all process inputs, system transfers software controller to “Manual” and alarms operator.

D. Process variable bad quality (BQ); controller actions when process variable in BQ:
1. For 1 process variable: Reject controller to “Off.”
2. For 2 (redundant) process variables: Select other signal and reject controller to “Off.”
3. For 3 (triple redundant) process variables: If 2 BQ, then reject controller to “Off.”

E. Pump control functions:
1. “On”: Breaker “Closed”.
2. “Standby”:
   a. If running pump Trips or other automatic start logic satisfied, then standby pump shall automatically “Start.”
   b. Control system alerts operator on failure of “Running” pump and operation of “Standby” pump.

F. Variable Frequency drive (VFD) control:
1. Applications:
   a. Belt VFDs.
   b. Fan VFDs.
   c. Pump VFDs.
2. VFDs controlled at local control station or remotely from control system operator display.
3. Local controller equipped with “Local-Off-Remote” (LOR) selector switch. Also interchangeably known as Hand-Off-Auto, respectively.
   a. “Local”:
      1) Maintenance/testing position for drive operation without interference from control system.
      2) VFD shall operate at speed corresponding to VFD software PID controller output.
   b. “Off”: VFD operation secured.
   c. “Remote”: VFD operation controlled by operator input, control logic, and/or field interlocks as applicable to specific application.
4. Normal operation:
   a. LOR in “Remote” and motor operation controlled from control system operator display.
   b. VFD starter controlled by operator from control system through software station with following functions:
      1) “Run” or “Start”/”Stop” commands.
      2) “Forward” command (if applicable).
      3) “Reverse” command (if applicable).
   c. VFD analog output controlled by analog controller.

G. Valve control logic – discrete:
1. Each “On-Off” valve controlled at local control station or remotely from control system operator display.
2. Normal operation
   a. Remote controlled from control system operator display.
   b. Valve controlled from control system through software “Open/Close” stations (unless noted otherwise).
   c. When valve in “Manual,” operator controls output.
   d. When valve in “Auto,” control logic (applicable to specific application) governs valve operation.

2.02 CONTROL SYSTEM DESCRIPTION: BELT FILTER PRESS

A. Belt Filter Presses BFP-1, BFP-2 and BFP-3
   1. New Belt Filter Presses BFP-1, BFP-2, and BFP-3 shall be programmed and reintegrated into existing plant control system PLC, editing or overwriting existing control logic.
   2. Allen Bradley configured logic for existing systems shall be replicated to serve new equipment, including packaged Belt Filter Presses 1, 2 and 3. New address locations shall be remapped into replicated logic as required. Logic associated with I/O points deleted shall be removed from configuration.
   3. Existing plant control of BFP systems shall remain; new equipment shall conform to existing plant control strategy, with modifications coordinated with Owner.
   4. Existing, respective BFP Master Control Panel hardware functionality shall remain, including Hand-Off-Auto (Local-Off-Remote) selector switches, E-Stops, pilotlights (indicating lights), pushbuttons, and VFD interface modules. BFP Master Control Panel Backpanels shall replace the existing control equipment.

B. Belt Filter Press Local Control Panels (furnished with equipment for BFP frame mounting) shall provide only local controls for maintenance, similar to existing. Selector switches shall only initiate equipment control when respective BFP Master Control Panel LOR selector switch is in Local. When switch is in Local position, hydraulic pump shall start and belt drive shall be enabled.
   1. Selector Switch for Forward/Reverse.
   2. Selector Switch for Extend/Retract.
   3. E-Stop pushbutton.

C. Existing BFP Feed Pump flowmeter configurations shall be verified to be in coordination with new BFP Feed Pumps and new BFPs operating capacities. Reconfigure as required.

D. Belt Filter Press Feed Pumps
   1. New BFP Feed Pumps shall operate via new, Owner-furnished and installed VFDs. Operation shall replicate that of existing system. Modify setpoints, control logic and I/O point mapping as required, in coordination with Owner.

E. Polymer Pumps
   1. New Polymer Pumps shall operate via new VFDs. Operation shall replicate that of existing system. Modify setpoints, control logic and I/O point mapping as required, in coordination with Owner.

2.03 CONTROL SYSTEM DESCRIPTION: BFP EXHAUST ODOR SCRUBBER

A. Scrubber shall run continuously if any BFP is running. BFP Room Exhaust Fans shall be disabled during scrubber operation. Disablement of BFP Room Exhaust Fans shall cease when all BFPs are off.

B. Scrubber package control panel shall provide common alarm to SCADA.

PART 3 EXECUTION

3.01 SYSTEM INTEGRATOR

A. ESCO Automation, an ESCO Group Company, Marion, Iowa.
   1. Contact: Mr. Mike Denning
   2. Telephone 319-377-5641 or 319-739-2218.

B. No substitutions without Owner's written permission.

END OF SECTION

1) Z. M. Carter
2) S. A. Warren

PART 1 GENERAL

1.01 SECTION INCLUDES

A. Requirements for graphic screens.

B. Configuration.

1.02 ACTION SUBMITTALS

A. Shop Drawings: Graphic screens layout and configuration. Color copies of each standard and custom operator graphic screen including static, dynamic, trend, and alarm summary screens.

1.03 GRAPHIC SCREEN REQUIREMENTS

A. Integrator shall remap new equipment I/O with existing graphic screens insofar as appropriate. Graphical components of I/O points deleted shall also be deleted. Primary focus is on Belt Filter Press replacements, but Owner may request graphical updates related to BFP Feed Pumps and Polymer Pumps. HVAC controls and monitoring graphics, insofar as connected to SCADA, shall be updated as appropriate.

B. For bidding purposes, assume graphic screen (modification or creation) quantities as follows:
1. BFP System Overview (1).
2. Belt Filter Presses (3).
3. BFP Room HVAC and/or BFP Exhaust Odor Scrubber (1).
4. Belt Filter Press Feed Pumps (1).
5. Polymer Pumps (1).

C. Graphic screens shall include but not be limited to following:
1. Typical system overviews.
2. Trend and alarm screens.
3. Equipment status screens with indication of equipment run hours, totalized flows, etc.
4. Plant systems based on P&IDs and electrical one-line diagrams.
5. Other miscellaneous screens as required.

PART 2 PRODUCTS

2.01 CONFIGURATION

A. Graphic screen configuration and development shall be responsibility of Integrator.

PART 3 EXECUTION

NOT USED

END OF SECTION

1) Z. M. Carter
2) S. A. Warren

PART 1 GENERAL

1.01 SECTION INCLUDES

A. Rotary lobe pumps, motors, and accessories.

B. Equipment list:

Item	Equipment Number
BFP Feed Pump	P 8810A
BFP Feed Pump	P 8820A
BFP Feed Pump	P 8830A

1.02 INFORMATIONAL SUBMITTALS

A. Product Data:
1. Identification of manufacturer and manufacturer's representative to which unit responsibility is assigned.
2. Manufacturer's information, including catalog data, performance curves and tables, specification sheets and product literature that shows equipment meets specified performance and design criteria and operating conditions.
3. Manufacturer’s warranty information.

B. Design submittals:
1. Characteristic performance curves for pumps, showing total dynamic head, efficiency, and brake horsepower plotted against capacity in gpm (lps). For variable speed applications, submit curves for both maximum and minimum operating speeds.
2. Certified shop test curves.

C. Test reports: Motor data and motor test data.

1.03 ACTION SUBMITTALS

A. Shop Drawings showing equipment, dimensions, and materials.

B. Submit copy of this Section with addenda and referenced sections with addenda, with each paragraph check-marked to indicate specification compliance or marked to indicate requested deviations and clarifications from specified requirements.
1. If deviations and clarifications from Specifications are indicated and requested by CONTRACTOR, provide detailed written justification for each deviation and clarification.
2. Failure to include copy of marked-up specification sections and or detailed justifications for requested deviation or clarification will result in rejection of submittal with no further review and consideration.

1.04 CLOSEOUT SUBMITTALS

A. Operation and maintenance information in accordance with requirements of Section 01 78 23.
1. Operation Manual(s):
a. Detailed step-by-step procedures required for start-up, operation, and shut-down.
b. Include manufacturer’s name, model number, parts list, and manufacturer’s representative.
2. Maintenance Manual(s):
a. List routine maintenance procedures, possible breakdowns and repairs, and troubleshooting guide.
b. Include simplified wiring and control diagrams of installed system.

1.05 MAINTENANCE MATERIALS

A. Provide following spare parts for each pump if used:
   1. 2 complete sets of mechanical seals and o-rings.
   2. 2 complete sets of rotors/rotor tips and o-rings.
   3. 1 complete set of axial protection plates.
   4. 1 complete set of radial liners.
   5. 2 complete sets of front and back wear plates
   6. 1 set of drive belts.
   7. 1 complete set of bearing.
   8. 1 set of special tools.

1.06 QUALITY ASSURANCE

A. Qualifications:
   1. Manufacturer engaged primarily in design and fabrication of rotary lobe pumps for at least the last 10 years.
   2. Minimum of 100 similar units installed and operating successfully in U.S.
   3. Authorized service center capable of servicing pumps within 250 miles of project site.
   4. Units shall be product of single manufacturer.

B. Regulatory requirements: Comply with applicable provisions and recommendations of HI, NFPA 70, IEEE, ANSI, NEMA except as otherwise shown or specified.

1.07 DELIVERY, STORAGE, AND HANDLING

A. Deliver, handle, store, and protect pumps as recommended by manufacturer and as specified in Section 01 60 00.

1.08 WARRANTY

A. Warranty supplied equipment and components for a period of 24 months from date of contract completion.

PART 2 PRODUCTS

2.01 SYSTEM REQUIREMENTS

A. Provide drive units, accessories, specials, and similar items required for complete installation.

B. Pumps shall be suitable for continuous operation at flow conditions stated herein without excessive noise, vibration, heating, cavitation, or damage to pump.

C. Shafts: Accurately grind and machine surface to ensure interchangeability of shafts and parts attached to shaft and be of sufficient size to transmit required horsepower.

D. Pump support shall accommodate hydraulic thrust forces; no supplementary support will be provided.

E. Equip pumps with flanged suction and discharge connections conforming to 125 lb (860 kPa) ANSI B16.1.

F. Design pumps for ease of dismantling for inspection and maintenance. Coupling guards shall be secured with wing nuts or self-tapping screws for ease of removal.

G. Materials or features not specified herein shall be manufacturer's standard for equipment and shall be suitable for specified service conditions. Pumps and motors shall be engineered and designed as complete, coordinated functioning units.

H. Pumps of same type shall be products of single manufacturer.

2.02 ROTARY LOBE PUMPS

A. Designation on Drawings: Belt Filter Press Pumps No. P8810A, P8820A, P8830A.

B. Type: Rotary lobe, positive displacement, suitable for pumping anaerobically digested primary and waste activated sludges.

C. Quantity: 3.

D. Performance
1. Normal operating capacity: 130 to 250 gpm (16 lps).
2. Rated operating point: 250 gpm (16 lps) at 55 (17m) TDH.
3. Maximum pump speed at rated point: 300 rpm.
4. Maximum Motor Size: 15 hp. Motor size shall be selected to provide the torque required to meet the design operating point(s) and the starting torque for sludges.
5. Pumps shall be suitable for pumping sludge with following solids concentration by weight and shall be capable of passing spheres of following sizes without clogging or damaging pumps: 4% solids; 2" (50 mm) diameter.

E. Materials:
1. Ductile or cast iron core dual lobe -type rotors, covered with urethane or Buna-N having Durometer hardness 65-72.
2. Impeller housing: Cast or ductile iron.
3. Shaft: AISI 4140 carbon steel.
4. Gear case: Cast or ductile iron.
5. Baseplate: Cast iron or fabricated galvanized steel.
6. Replaceable Radial liners: Hardened carbon steel, XAR400 or equal.
7. Transition Nozzles: 316L stainless steel.

F. Lobe rotors shall have controlled tolerances to prevent metal-to-metal or urethane-to-metal contact.

G. End cover: Removable, to provide complete access to pumping chamber without disconnecting pipe work or disturbing glands or bearings.

H. Rear of pump casing and front cover shall be protected with replaceable wear plates.

I. Shaft bearings: Heavy-duty roller or ball bearings; oil or grease lubricated; no bearings in pumping chamber.

J. Side suction port design, flanged suction and discharge connections drilled and faced to 125 lb (860 kg) ANSI B16.1. Flanged suction and discharge connections shall be transitional reducer/increasers from pump suction/discharge opening size to 6” round pipe size.

K. Shaft construction: The shafts shall be non-sludge-wetted. The rotor/shaft connection shall be lubricated with quench fluid of the intermediate chamber. Sludge wetted rotor/shaft connections are not acceptable.

L. Seals: Single acting mechanical seal with two seal faces, specifically intended for sludge. Pumps shall be constructed with an oil-filled intermediate chamber between the pump casing and the gearbox for lubrication and cooling of the mechanical seals.

M. Baseplate: Pump and drive fitted on common base.

N. Pump discharge pressure switch: Provide pump pressure switches on each pump discharge line.

O. Motor and pump mounting: Piggyback in-line, shafts with belt and pulley drive.

P. Belt guard: Provide belt guard of OSHA-approved design. Attach with wing nuts or secure latch mechanism for ease of removal.

Q. Pump shall utilize an existing Allen Bradley variable frequency drive, coordinate with Owner

R. Manufacturer: Boerger, Lobeline, or Engineer approved equal.

2.03 MOTORS

A. Standards: Applicable parts of NEMA MG1.

B. Type: Horizontal, squirrel-cage induction, solid shaft. Provide grease-lubricated ball bearings.

C. Enclosures: TEFC, suitable for NEC Class I, Group D, Division 2 locations.

D. Starting: Reduced voltage for variable speed pumps.

E. Ratings:
1. Continuous duty.
2. Nameplate motor horsepower shall be not less than maximum required pump input for maximum conditions of head and capacity specified.
3. Voltage: 460 volts, 3-phase, 60 Hz.
4. Service factor: NEMA standard.

F. Insulation and temperature rating: Class F insulation for use in 40ºC ambient.

G. Efficiency:
1. Motors shall be high-energy efficient-type.
2. Nominal full-load efficiency determined in accordance with NEMA MG1-12.54.1.
3. Nameplate identification in accordance with NEMA MG1-12.54.2.
4. Nominal full-load efficiency shall equal or exceed values listed in Table 12-6B of NEMA MG1-12.55 for various motor speed and enclosure types.

H. Motors used with variable speed pumps shall be completely coordinated with pumps and variable speed drive system for intended duty.

I. Winding temperature switches: Dual thermostats for each motor stator windings in accordance with Section 26 05 03.

2.04 SHOP FINISHING

A. Exposed ferrous surfaces shall be sandblasted to commercial grade finish SSPC SP6; and given 1 shop coat of Tnemec "66-1211 Epoxoline Primer" epoxy primer, 4.0 mdft.

B. Coat machine-finished surfaces with suitable corrosion preventative compound.

C. Motors shall be manufacturer's standard finish painting.

2.05 IDENTIFICATION

A. Permanently attach stainless steel nameplate to pump. Nameplate shall contain following information:
1. Equipment number (see Drawings).
2. Serial number of pump.
3. Capacity in gpm.
4. Pumping head in feet.
5. Speed, rpm.
6. Manufacturer's name.
7. Size and type of pump.

8. Design pressure.

B. Provide rotary lobe pumps with cast-in or permanently attached direction-of-rotation arrow.

PART 3 EXECUTION

3.01 INSTALLATION

A. Comply with requirements of Section 01 73 19.

3.02 FIELD PAINTING

A. As specified in Section 09 96 00.

3.03 FIELD QUALITY CONTROL

A. Provide inspection and testing by service representative as specified in Section 01 43 33.

B. Describe installation to CONTRACTOR.

C. Inspect and accept installation for compliance with warranty requirements.

D. Direct and witness equipment testing prior to plant startup.

E. Test equipment to show it can achieve performance and design requirements specified.

END OF SECTION

1) J.M. Brady
2) D.K. Mathias

PART 1 GENERAL

1.01 SECTION INCLUDES

A. Dual Media Odor Control Scrubber System.

B. Scrubber Blower System.

1.02 INFORMATIONAL SUBMITTALS

A. Product Data:
1. Characteristic performance curves for blowers, showing total dynamic head, and brake horsepower plotted against capacity in scfm.
2. Motor data.
3. Control panel information including wiring diagrams.
4. Identification of manufacturer and manufacturer's representative to which unit responsibility is assigned.
5. Manufacturer's information, including catalog data, performance curves and tables, specification sheets and product literature that shows equipment meets specified performance and design criteria and operating conditions.

B. Quality assurance data: Written warranty.

1.03 ACTION SUBMITTALS

A. Shop Drawings showing equipment, dimensions, materials, weights, motor, and connection provisions for ducting and electrical power.

B. Performance curve showing flow, TDH, blower speed, and horsepower.

C. Manufacturer’s written performance guarantee.

D. Performance test results.

1.04 CLOSEOUT SUBMITTALS

A. Operation and maintenance information in accordance with requirements of Section 01 78 23.

1.05 QUALITY ASSURANCE

A. Qualifications:
1. Manufacturer engaged primarily in design and fabrication of single and dual dry media odor control systems for wastewater service for at least the last 10 years.
2. Minimum of 50 similar units installed and operating successfully in U.S.

B. The manufacturer shall be a single source provider of equipment, media, and testing services and be certified to ISO-9001:2008 standards. Re-sellers of equipment and media will not be accepted.

C. The manufacturer shall also manufacture media in their own facility to ISO-9001:2008 standards

D. The manufacturer shall have local, factory-trained representatives.

1.06 SITE CONDITIONS

A. Equipment shall be located outdoors at wastewater treatment plant with low concentrations of background atmospheric hydrogen sulfide and ammonia.

B. Outdoor air characteristics:
   1. Temperature: -20ºF to 105ºF.
   2. Relative humidity: 30% to 100%.

1.07 WARRANTY

A. Guarantee completely installed system for 2 years following final acceptance with a warranty against defects in workmanship and materials. Warranty shall be limited to parts and labor for necessary repairs within warranty period.

B. Repairs shall be made within 60 days after manufacturer is notified of defect.

C. Normal maintenance items not covered by warranty.

PART 2 PRODUCTS

2.01 MANUFACTURERS

A. Purafil.

B. BioAir.

C. Integrity.

D. Or equal.

2.02 SYSTEM REQUIREMENTS

A. Provide complete odor scrubber system consisting of:
   1. Blower system to remove air from room ducting and pressurize for flow through scrubber system.
   2. Transitional plenum from 36’ (1 m) round duct to scrubber system connection.
   3. Dual dry media and housing.
   4. Pre-filter.
   5. Discharge stack with inline silencer, rain hood and bird screen.
   6. Sound Enclosure.
   7. 316 ss grounding rod one (1) per vessel.
   8. Control/instrumentation/motor starter panel.
   9. Ancillary devices necessary for complete and operational system.

B. Performance
   1. The media and unit must be capable of removing a minimum of 99.5% of up to 5 ppm H2S, up to 3 ppm of methyl mercaptans, up to 10 ppm, of ammonia.
   2. The physical media is required to last for 10 years.

C. Sizing
   1. Adequate media with capacity to remove average loading concentrations of 1 ppm H2S, 4 ppm ammonia, and 2 ppm methyl mercaptans for a period not less than 3 years when operated up to 15 hours per day five days per week shall be provided.
   2. System shall be of adequate size for 9500 scfm air rate at approximately 9.55 inches of water column inclusive of prefilter, final filter, media, and external duct system losses.
   3. System shall be a 3-pass unit using dual media mix with design airflow face velocity of 100 ft/min.

D. Arrangement
   1. The unit shall be arranged for horizontal airflow through vertically oriented, separate media beds. The media beds shall be arranged in series to assure maximum contaminant removal efficiency. The system shall be a draw through design with the motor and blower enclosed inside the unit
   2. The unit shall be equipped with gasketed side access ports for servicing of components.

3. The unit shall shall contain media sampling ports located on each media bed; these shall extrude from the unit approximately 2” (51 mm) outward from the bed on both sides of the unit. The ports shall be located in the center of the media bed and shall be covered with a PVC cap.
4. Standard 4” (102 mm) vacuum truck ports shall be located at bottom of media bed.
5. Grating shall be located on top of unit at all locations where fill ports are not located.
6. Unit Access
   a. Provide OSHA approved aluminum ladder with cage at inlet plenum area.
   b. Railing shall be provided around all top area with a section that can be disconnected for media loading only.
   c. Manufacturer is responsible for insuring ladder and railings are compliant with regulations
7. Discharge stack shall be provided at outlet with rain hood and bird screen.
8. Inlet transition shall be provided from the mist eliminator to the contractor’s duct connection. The contractor is responsible for all incoming ductwork.

2.03 Materials

A. The Deep Bed Scrubber housing shall be fabricated of aluminum or fiberglass.

B. The unit shall be provided with side access hatches and gaskets for servicing of components. Stainless steel latches shall have a positive locking action and shall include an encapsulated standard steel shaft.

C. All hinges shall be constructed of stainless steel.

D. Housing materials shall be weatherproof and suitable for outdoor operation.

E. Unit shall come fully assembled and shipped on a 3” (76 mm) aluminum skid base.

F. Aluminum name plate shall be provided, permanently riveted to the unit. Nameplate shall be engraved with the scrubber type, order number and serial number.

2.04 Pre-filter

A. Unit to be designed to accommodate a medium efficiency (30%) pleated particulate filter with high service life.

B. Hinged access doors with gaskets shall allow for the filter to be replaced.

C. Pressure taps and gages shall be installed to permit a local read out of the pre-filter pressure drop.

2.05 Blower Section

A. Unit to be furnished with a 20 Hp, 3-phase 460V, 60 Hz TEFC motor and blower with a fixed V belt drive and airfoil wheel to assure even, quiet airflow at a rate of 9,500 cfm.

B. The Deep Bed Scrubber shall contain an enclosed blower assembly for outdoor operation and sound attenuation.

C. Provide a minimum of 30” (762 mm) for service clearance at blower assembly.

D. Equip blower with condensate drain port.

2.06 Media Bed Section

A. The media bed section shall include three (3) 12” (308 mm) deep beds. The 1st and 2nd pass of media shall be Odorcarb Ultra and the 3rd pass shall be Odormix SP media

B. Each media bed shall be contained between separate corrosion resistant support grids and perforated sheet metal to provide media support while imposing a minimum resistance to airflow.

C. The media containment sections shall be separated to assure filling and removal of individual beds as required. New media shall be poured in bulk into the top of the unit through access hatches and shall be filled a minimum of 7” (178 mm) above the bed to prevent airflow bypass. Spent media shall be vacuumed from the bottom of the unit through standard 4” (102 mm) vacuum ports.

D. A minimum of 72” (1828 mm) of service clearance are recommended in order to sample the media beds from sample ports.

2.07 Motor Starter/Control Panel

A. NEMA 4X, 316 stainless steel enclosure.

B. Motor starter: FVNR, ATL, with overload heaters, NEMA sized for 20 hp, 460 VAC, 3 phase motor.

C. Control power transformer, 460/120 VAC, with fused primary and secondary.

D. Main circuit breaker, magnetic, with front-panel operating handle.

E. Operator interface and display:
   1. “Hand-Off-Auto” selector switch.
   2. Indicating lamps (all lamps are push-to-test style):
      a. “Fan Off”.
      b. “Fan Running”.

F. Control panel shall communicate with plant SCADA system via Ethernet.
   1. Blower motor shall start and stop in when selector switch is in Auto based on signals from SCADA system.
   2. Panel shall report blower motor status to SCADA.
   3. Panel shall provide common alarm signal to SCADA for scrubber system alarms.

2.08 Instrumentation

A. Differential Pressure: A gage shall be included with the scrubber to permit local read-out of pressure drop through the prefilter and media. The gauge shall be a 0-3” as manufactured by Dwyer. Unit shall ship separately and shall be field mounted by contractor.

B. Gauges to be Magnehelic type

2.09 Outlet Silencer

A. The system shall be provided with a silencer on each exhaust stack.

B. This package shall consist a circular silencer with outer casing of aluminum or fiberglass.

C. Circular silencers shall be made of not less than 22 gauge aluminum or equivalent fiberglass and properly stiffened to ensure structural integrity.

D. Acoustically absorptive fill except for reactive (no media) silencers shall be inorganic glass fiber of a proper density to obtain the specified acoustic performance and be packed under not less than 5% compression to eliminate voids due to vibration and settling. Material shall be inert, vermin and moisture proof and impart no odor to the airstream and bagged in fiberglass cloth including acoustic spacer.

E. Interior partitions for circular silencers shall be secured with galvanized steel radial mounting brackets welded to the partition and the outer silencer casing. The radial brackets shall be installed full length and at 120 degree angles to each other to assure uniform spacing for consistent aerodynamic and acoustic performance.

F. Mounting and support silencer with proper guide wires, supports, etc.

2.10 Media Bed Section

A. The media bed section shall include three (3) 12" (308 mm) deep beds. The 1st and 2nd pass of media shall be Odorcarb Ultra and the 3rd pass shall be Odormix SP media or equivalent medias.

B. Each media bed shall be contained between separate corrosion resistant support grids and perforated sheet metal to provide media support while imposing a minimum resistance to airflow.

C. The media containment sections shall be separated to assure filling and removal of individual beds as required. New media shall be poured in bulk into the top of the unit through access hatches and shall be filled a minimum of 7" (178 mm) above the bed to prevent airflow bypass. Spent media shall be vacuumed from the bottom of the unit through standard 4" (102 mm) vacuum ports.

D. A minimum of 72" (1828 mm) of service clearance are recommended in order to sample the media beds from sample ports.

2.11 Media

A. Medias specified herein are based on Purafil. Equivalent medias from alternate suppliers can be proposed.

B. Odorcarb Ultra Media
1. The Odorcarb Ultra Media shall consist of manufactured, generally spherical porous pellets. The pellets shall be formed from a combination of powered activated carbon, alumina, and other and proprietary chemicals to enhance the capacity for removal of odorous gases. The pellets shall also chemically react to produce solid reaction products within the media.
2. Odorcarb Ultra Media shall have the following physical properties:
   a. Moisture content: 35% maximum.
   b. Average crush strength: 35% minimum - 70% maximum.
   c. Average abrasion: 4.5 maximum.
   d. Bulk density: 40 lbs/ft3 (0.64 g/cc) +5%.
   e. Nominal pellet diameter: 1/16" – 1/8" (1.587 mm).
   f. H2S Removal Capacity: 0.3g/cc.
   g. Removes 18.8lbs of H2S per cubic foot minimum.
3. Odorcarb Ultra Media shall be UL Classified Class 2.
4. Odorcarb Ultra Media shall be capable of absorbing and removing odorous gases throughout the entire pellet.

C. Odoroxidant SP Media
1. Odoroxidant SP Media shall be manufactured of generally spherical, porous pellets formed from a combination of powdered activated alumina and other binders, suitably impregnated with potassium permanganate to provide optimum adsorption, absorption, and oxidation of a wide variety of gaseous contaminants. The potassium permanganate shall be applied during pellet formation, such as the impregnant is uniformly distributed throughout the pellet volume and is totally available for reaction.
1. Odoroxidant SP Media
   a. Moisture content: 35% maximum.
   b. Average crush strength: 35% minimum - 70% maximum.
   c. Average abrasion: 4.5% maximum.
   d. Bulk density: 50 lbs/ft3 (0.8 g/cc) +5%.

e. Nominal pellet diameter: 1/16" (1.587 mm).
f. Sodium permanganate content: 12% minimum.

D. Odorkol Media
1. Odorkol Media shall be a premium grade, activated carbon with a high surface area available for adsorption.
a. Moisture content: 5.0% maximum.
b. CTC: 55 minimum.
c. Base material: activated carbon.
d. Bulk density: 30-32 lbs/ft3 (0.48-0.51 g/cc) +5%.

E. Odormix SP Media
1. The Odormix SP Media shall consist of an equal mix (by volume) of Purafil ESD's Odoroxidant SP Media and Odorkol.
2. Odormix SP media shall be UL Classified Class 1.

F. Media must be Non-Hazardous before and after it is spent.

G. Only UL certified media will be accepted in this aluminum vessel with companies that contain additional product liability on their systems. Companies lacking this liability and UL certification will not be accepted. Strictly Carbon medias will not be accepted due to their frequent ability to for bed fires.

H. The manufacturer must open their facilities to the engineer and owner at any time during production of the media and equipment.

PART 3 EXECUTION

3.01 INSTALLATION

A. Refer to Section 01 73 19.

3.02 MANUFACTURER'S FIELD SERVICES

A. Provide inspection and testing by service representative as specified in Section 01 43 33.

B. Describe installation to Contractor.

C. Inspect and accept installation for compliance with warranty requirements.

D. Direct and witness equipment testing prior to plant startup.

E. Test equipment to show it can achieve performance and design requirements specified.

F. Prepare testing report.

3.03 Acceptance

A. Satisfactory installation, operation and performance of the required test shall be the basis of acceptance of the equipment.

B. While taking a gas concentration from the dry media scrubber outlet, if the hydrogen sulfide, methyl mercaptans, other tested gas concentration exceeds 10 ppb the system shall not be accepted.

C. If moisture or air flow is less that the design throughout the entire test period the unit shall also not be accepted.

D. Should the equipment not be accepted on initial testing, the manufacturer shall have the opportunity to adjust or modify the equipment and operating conditions.

E. The additional testing shall be performed at no expense to the Owner.

F. If modifications or adjustments are made which would affect the air flow design rate, the air handing system (fan, drive, etc.) shall be modified or replaced accordingly to maintain the air flow design rate.

G. Should the installed equipment not meet the performance specifications upon re-testing, the Contractor shall remove the installed equipment and replace it with equipment which meets the specifications at no cost to the Owner. The Contractor shall make all necessary supporting systems changes in order to provide a properly installed operating system.

H. No time extension shall be guaranteed for testing, re-testing, modifications or replacement of equipment.

3.04 Report

A. A summary report shall be prepared for the media performance testing and the performance testing and submitted by the Contractor to the Engineer for review and acceptance.

B. The report shall include a one page executive summary, description of test protocol, table of results showing airflow, inlet air results, and outlet air results.

3.05 Analytical Services

A. The manufacturer shall, after start up, provide lab analysis service to predict the remaining life style of the media. free of charge

B. Such service shall be provided at the manufacturer’s expense for a period of ten years.

C. The manufacturer shall be able to provide in-house lab analysis of the equipment media predicting the remaining life cycle of the media. Such service shall be provided at the manufacturer’s expense.

D. Such service shall be provided at the manufacturer's expense for a period of at least ten years.

END OF SECTION

1) J.M. Brady
2)

PART 1 GENERAL

1.01 SECTION INCLUDES

A. Progressing cavity polymer metering pumps, motors, and accessories.

B. Equipment list:

Item	Equipment No.
Polymer Metering Pump	P 9321A
Polymer Metering Pump	P 9322A
Polymer Metering Pump	P 9323A
Polymer Metering Pump	P 9326A

1.02 RELATED REQUIREMENTS

A. Section 01 43 33 – Manufacturer’s Field Services.

B. Section 01 73 19 – Installation Requirements

C. Section 26 05 03 – Small and Medium 3-Phase Motors.

1.03 INFORMATIONAL SUBMITTALS

A. Product Data:
1. Characteristic performance curves for pumps, showing total dynamic head, and brake horsepower plotted against capacity in gpm.
2. Motor data.
3. Identification of manufacturer and manufacturer's representative to which unit responsibility is assigned.
4. Manufacturer's information, including catalog data, performance curves and tables, specification sheets and product literature that shows equipment meets specified performance and design criteria and operating conditions.

B. Quality assurance data: Written warranty.

1.04 ACTION SUBMITTALS

A. Shop Drawings showing equipment, dimensions, materials, motor, and connection provisions for piping and electrical power.

B. Performance curve showing flow, TDH, pump speed, and horsepower.

1.05 CLOSEOUT SUBMITTALS

A. Operation and maintenance information in accordance with requirements of Section 01 78 23.

1.06 MAINTENANCE MATERIALS

A. Spare parts: Each unit shall be furnished with manufacturers repair kit that shall include all parts required for disassembly and reassembly including as minimum the following:
1. One complete stator assembly.
2. One complete universal joint set.
3. One complete set of packing.
4. One complete set of bearing
5. Other spare parts as recommended by the manufacturer

1.07 QUALITY ASSURANCE

A. Qualifications:
   1. Manufacturer engaged primarily in design and fabrication of progressing cavity pumps for wastewater service for at least the last 10 years.
   2. Minimum of 50 similar units installed and operating successfully in U.S.

B. Units shall be supplied by one manufacturer for commonality and shall be the same manufacturer supplying the progressive cavity sludge pumps. Refer to Section 43 21 53.

1.08 SITE CONDITIONS

A. Equipment shall be located indoors in heated, ventilated building.

B. Indoor air characteristics:
   1. Temperature: 50ºF to 104ºF.
   2. Relative humidity: 30% to 100%.

1.09 WARRANTY

A. Guarantee completely installed system for 2 years following final acceptance with a warranty against defects in workmanship and materials. Warranty shall be limited to parts and labor for necessary repairs within warranty period.

B. Repairs shall be made within 60 days after manufacturer is notified of defect.

C. Normal maintenance items not covered by warranty.

PART 2 PRODUCTS

2.01 MANUFACTURERS

A. Robbins and Myers, Moyno.

B. Netzsch Incorporated, Nemo.

C. Seepex.

D. Or equal.

2.02 SYSTEM REQUIREMENTS

A. Provide drive units, accessories, specials, and similar items required for complete installation.

B. Pumps shall be suitable for continuous operation at flow conditions specified without excessive noise, vibration, heating, cavitation, or damage to pump.

C. Shafts: Accurately grind and machine surface to ensure interchangeability of shafts and parts attached to shaft and be of sufficient size to transmit required horsepower.

D. Pump support shall accommodate hydraulic thrust forces; no supplementary support will be provided.

E. Equip pumps with flanged suction and discharge connections conforming to 125 lb ANSI B16.1.

F. Design pumps for ease of dismantling for inspection and maintenance. Coupling guards shall be secured with wing nuts for ease of removal.

G. Materials or features not specified shall be manufacturer's standard for equipment and shall be suitable for specified service conditions. Pumps and motors shall be engineered and designed as complete, coordinated functioning units.

2.03 PROGRESSING CAVITY PUMP

A. Type: Progressing cavity, positive displacement.

B. Minimum number of stages: 2.

C. Quantity: 2.

D. Operating conditions:
1. Flooded suction.
2. Normal operating capacity range: 1 gpm at 185’ to 30 gpm at 185’.
3. Pump speed at normal operating range: 125 rpm to 600 rpm.
4. Rated for operating up to: 30 gpm at 185' TDH.
5. Maximum pump speed at rated point: 850 rpm.
6. Pumps shall be suitable for pumping polymer solution viscosity 2,000 centipoises, specific gravity of 1.05 and with 0.5% solids by weight and shall be capable of passing spheres of 0.16" (4 mm) diameter.
7. Motor horsepower; 3.

E. Materials:
1. Case: Cast iron, ASTM A48, Class 25.
2. Stator: Buna-N or nitrile synthetic rubber.
3. Rotor: High carbon, high chrome tool steel with minimum 0.01" chrome plate.
4. Drive shaft: Tool steel, chrome plated through packing areas.
5. Base: Fabricated steel or cast iron.

F. Frame: Rigid skid-type frame base for pump drive and motor. Cradle-type permitting rotation of suction to any position.

G. Stator: 1-piece molding bonded to metal housing.

H. Rotor: Helical-type.

I. Shaft: Design to support axial and radial loads. Pin-type sealed universal joints.

J. Bearings: Grease-lubricated radial and thrust bearing. B-10 life of bearing shall exceed 100,000 hours.

K. Seals: Packed stuffing box with lantern ring and ductile iron split gland. Provide threaded fitting for grease lubrication.

L. Baseplate: Common base for pump and drive with gutter lip and 1" (25 mm) threaded drain connection.

M. Gear reducer: Provide gear reduction between drive motor output shaft and pump drive shaft for required speed range.

N. Coupling guard: Provide coupling guard of OSHA-approved design. Attach with wing nuts for ease of removal.

2.04 MOTORS

A. Type: Horizontal, squirrel-cage induction, solid shaft. Provide grease-lubricated ball bearings.

B. Enclosures: TEFC.

C. Operation: Variable speed.

D. Ratings:
1. Continuous duty.

2. Nameplate motor horsepower shall be no less than maximum required pump input for maximum conditions of head and capacity specified.
3. Voltage: 460 volts, 3-phase, 60 Hz.

E. Motors used with variable speed pumps shall be inverter duty and shall be suitable for operation with variable speed drive.

F. Meet applicable requirements of Section 26 05 03.

2.05 SHOP PAINTING

A. Exposed ferrous surfaces shall be sandblasted to commercial grade finish SSPC SP6; and given 1 shop coat of Tnemec "66-1211 Epoxoline Primer" epoxy primer, 4.0 mdft.

B. Coat machine-finished surfaces with suitable corrosion preventative compound.

C. Motors shall be manufacturer's standard finish painting.

2.06 IDENTIFICATION

A. Permanently attach stainless steel nameplate to pump. Nameplate shall contain following information:
1. Equipment number (see Drawings).
2. Serial number of pump.
3. Capacity in gpm.
4. Pumping head in feet.
5. Speed, rpm.
6. Manufacturer's name.
7. Size and type of pump.
8. Design pressure.

B. Provide progressing cavity pumps with cast-in or permanently attached direction-of-rotation arrow.

PART 3 EXECUTION

3.01 INSTALLATION

A. Refer to Section 01 73 19.

3.02 FIELD PAINTING

A. As specified in Section 09 96 00.

3.03 MANUFACTURER’S FIELD SERVICES

A. Provide inspection and testing by service representative as specified in Section 01 43 33.

B. Describe installation to Contractor.

C. Inspect and accept installation for compliance with warranty requirements.

D. Direct and witness equipment testing prior to plant startup.

E. Test equipment to show it can achieve performance and design requirements specified.

END OF SECTION

1) J.M. Brady
2)

PART 1 GENERAL

1.01 SECTION INCLUDES

A. Continuous belt filter press equipment for nominal 2-meter belt filter presses as specified and required to provide a complete and operating system for dewatering temperature-phased (Thermophilic-Mesophilic) anaerobically digested sludge.

B. Digested sludge is a combination of primary sludge and secondary sludge from a liquid treatment process that at times experiences enhanced biological phosphorus removal.

1.02 SUBMITTALS

A. Product Data:
1. Manufacturer's literature, illustrations, specifications and engineering data including: general arrangement, outline drawings, dimensions, size, weight, foundation loadings performance data, and motor horsepower.
2. Control description and I/O list for all equipment provided by belt filter press manufacturer.
3. Hydraulic belt tensioning system, if provided, including manufacturer literature and oil flow rate, pressure, and type requirements.
4. Motor size and model number.
5. Control panel dimensions.

B. Shop Drawings:
1. Drawings showing entire belt filter press assembly, including material list and description of all components, structural members, auxiliary items and devices.
2. Details of any additional equipment, structural items, and devices required to conform to available space (Reference: paragraph 2.02).
3. Recommended platform layout for accessing critical components of equipment.
4. For all motors, data including type, size and model number; assembly drawings, operations and maintenance manual, rated size of motors with calculations supporting selected motor size, temperature rating.
5. Complete control panel and local control panel details, wiring diagrams showing all electrical connections to motors and variable speed controls, and logic diagrams.
6. Control diagrams and process and instrumentation diagrams relating to submitted equipment.
7. Drawing and catalog information detailing all control devices in control cabinets as well as overall panel layout interconnection diagrams and construction.
8. Detailed installation drawings, showing size and location of all equipment, piping, electrical, instrumentation and structural connections.
9. Setting drawings, templates, and directions for installation of anchor bolts and other anchorages.
10. Anchor bolt requirements for cast-in-place construction.

C. Calculations certified by a professional engineer registered in Iowa, documenting structural design of frame and rollers per requirements specified. Calculations shall be submitted within two weeks of contract award.

D. Written report of field test results.

E. Proposed on-site testing and start-up procedures.

F. Training course outline and proposed class materials.

1.03 CLOSEOUT SUBMITTALS

A. Operating and maintenance information for proposed equipment.

B. Extended warranty

C. Installation list.

D. Certificate of Unit Responsibility attesting that manufacturer accepts unit responsibility in accordance with requirements of this Section. No other submittal material will be reviewed until certificate has been received and found to be in conformance with these requirements. Format shall be as provided in Form A.

E. Training Certification as specified within 30 days of training.

F. Affidavit as specified prior to contract completion.

1.04 MAINTENANCE MATERIALS

A. One set of any tools required for servicing belt filter presses shall be provided. In addition, following spare parts shall be provided:
   1. Two complete sets, replacement belts (The belts shall not be provided until a period of time after start up, to allow evaluation of performance of installed belts.)
   2. Two complete sets of doctor blades including all fasteners, brackets and appurtenances necessary for mounting on press frame
   3. Cams, if used, for doctor blades
   4. Gravity, wedge and shower box seals
   5. One complete set, water spray nozzles
   6. One bearing of each size and type used on each machine and subassembly
   7. One complete set, all belt positioning and tensioning devices

B. Spare parts shall be protected, labeled, and boxed. Special tools shall be Proto, or equal, with name of Owner engraved on each. Tools shall be furnished in a painted metal mechanic's toolbox fitted with a lock hasp. The words "Belt Filter Press Tools" and name of Owner shall be neatly stenciled on cover.

C. Furnish a list of additional recommended spare parts for an operating period of one year. This list shall describe each part, quantity recommended, and unit price of part.

D. Furnish oil and grease required for initial operation. Products shall be as recommended by manufacturer.

1.05 DELIVERY, STORAGE AND HANDLING

A. Deliver materials to Site to ensure uninterrupted progress of work.

B. Provide storage instructions for equipment.

C. Boxes, crates and packages will be inspected upon delivery. Damage components shall be replaced or repaired in accordance with manufacturer's instructions at no additional cost to Owner.

1.06 QUALITY ASSURANCE

A. manufacturer qualifications:
   1. Minimum of 5 years’ experience in design and fabrication of belt filter presses for sludge dewatering in wastewater treatment plants.
   2. able to demonstrate a minimum of 10 installations within United States in wastewater applications similar to that herein specified. At minimum five of installations shall have been in operation for a minimum of five years.
   3. A summary of required installations shall be submitted including:
      a. Location installed.
      b. Contact information of end user.
      c. Year installed.
      d. Number of units and belt width.
      e. Type of sludge dewatered (e.g. primary, secondary, combination, digested, etc.).

B. Obtain all equipment included in this Section regardless of component manufacturer from a single belt filter press manufacturer.

C. Unit responsibility:
   1. The unit responsibility as specified is assigned to belt filter press manufacturer for equipment specified in this section. A certificate of unit responsibility shall be provided.
   2. The unit responsibility manufacturer shall coordinate selection, coordinate design, and shall provide all mechanical equipment assembly components such that all equipment components furnished under specification for equipment assembly, and all equipment components specified elsewhere but referenced in this specification, is compatible and operates reliably and properly to achieve specified performance requirements. Agents, representatives or other entities that are not a direct division of driven equipment manufacturing corporation shall not be accepted as a substitute for driven equipment manufacturer in meeting this requirement.

1.07 ENVIRONMENTAL CONDITIONS

A. The sludge filter press will be located in Sludge Processing Facility in a ventilated room as specified. The press will be floor mounted above center drainage sump. The press will be subjected to frequent hosedown for cleaning purposes. The temperatures within press room may be expected to range between 40 and 100 degrees F; relative humidity will range between 50 and 100 percent.

B. It may be expected material discharged to each press will be in an actively digesting state, and small quantities of digester gas may be present. The gas is expected to contain methane in concentrations of up to 70 percent, with remainder comprised of principally carbon dioxide with up to 2000 parts per million dissolved hydrogen sulfide and trace quantities of nitrogen. While it is very unlikely explosive concentrations of methane will be present in room atmosphere, manufacturer is advised that corrosive agents (moisture, hydrogen sulfide gas, sulfuric acid, etc.) will be present at all times. Accordingly, materials shall be selected to provide appropriate resistance to corrosion and every effort shall be exercised in manufacture of equipment to eliminate crevices, unsealed overlapping plates and similar inaccessible areas where corrosion can take place without allowing access for application of preventive measures.

C. Controls: The press, along with associated sludge and polymer pumps, will be operated at a variable rate to optimize combinations of feed rate, polymer addition and belt speed for various conditions of sludge concentration, organic/inorganic solids percentage and other characteristics. Control for feed pumps and polymer pumps will be by plant SCADA system.

D. Utility services:
   1. Water for belt cleaning sprays will be strained plant effluent water. The water pressure at press will range from 85 to 135 pounds per square inch. Water consumption shall not exceed 120 gallons per minute. Water for cleaning sprays will be strained plant effluent, which is expected to contain up to 10 mg/l chlorine, small quantities of biological floc and dilute concentrations of industrial solvents.
   2. Polymer, in diluted solution form, will be pumped to press polymer/sludge mixing section by a variable speed, positive displacement pump.
   3. Power for motors will be provided at 480 volts AC, 60 Hz, 3 phase. The maximum recommended belt speed for performance in accordance with paragraphs 1.02 Extended Limited Warranty shall correspond to operation of drive motor at 480 volts AC, 60 Hz.

E. Applied solids:
   1. Anaerobically digested primary and waste sludge from treatment process will be pumped to press by dedicated, variable speed positive displacement feedstock pump. The ratio of primary to secondary solids is expected to vary between 0.75 and 1.5. The sludge is expected to contain quantities of industrial wastes including solvents, petroleum products, grit, hair, rags, grease, plastic and rubber goods, and organic solids in concentrations ranging from 1.5 to 5 percent. The filter press will be routinely operated with an inlet solids concentration of 1 to 2 percent.
   2. Sludge delivered to press will have a temperature of 55 to 100 degrees F and will have a pH which may range from 5 to 8.

1.08 WARRANTY

A. Manufacturer of belt press shall provide an extended warranty for Owner. The warranty shall cover troubleshooting investigations, repair and replacement of parts due to defective materials or workmanship for durations listed below following date of Substantial Completion. Provide a certificate from belt press manufacturer which defines conditions and terms of warranty as outlined below. All costs for extended warranty shall be included in manufacturer's bid. The manufacturer's certificate of extended warranty for belt filter press equipment shall include following:

B. Warrant frame and coating for a period of three years from date of Substantial Completion. Any defects or corrosion occurring within warranty period shall be repaired or replaced, at no additional cost to Owner.

C. Warrant rollers and coating to be free from manufacturing defects for a period of three years from date of Substantial Completion. Neither rollers nor coating shall require preventive maintenance during warranty period. The warranty shall include all parts and labor and shall cover cost of repairing or replacing any item that fails during warranty period, provided damage is not due to misuse or neglect by others.

D. Warrant complete bearing assembly, as specified herein, for a period of five years from date of Substantial Completion. The warranty shall include all parts and labor for repairing or replacing any bearing assembly part that fails during warranty period.

E. Belt Life Guarantee: manufacturer shall guarantee that belt life of each belt furnished will not be less than 4,500 hours. Belts not providing this wearability under normal usage shall be replaced. Belts providing less than 2,000 hours shall be replaced at no additional cost to Owner. Belts providing more than 2,000 hours will be paid for by Owner on a pro rata basis.

PART 2 PRODUCTS

2.01 MANUFACTURER

A. Charter Machine Company.

2.02 SYSTEM DESCRIPTION

A. The belt filter press shall be specifically designed for wastewater sludge service and shall be of continuous belt design with three distinct dewatering sections: gravity drainage, wedge compression, and roll pressurization, to yield cake solids concentration required under this section. Equipment employing other types of dewatering sections or combinations of dewatering sections other than those specified will not be accepted. Equipment utilizing prethickening devices such as added gravity belts, rotary prethickeners, or other such devices will also not be accepted.

B. The machine shall be of type which, in wedge and roll pressurization zones, entrains sludge between no more than two continuous open meshed belts with a system of rollers and belt tensioning devices acting on rollers exclusively to provide ever increasing pressure as sludge advances toward discharge point of machine. The gravity section may utilize a separate belt.

C. Equipment provided under this specification shall be of industrial type, specifically designed for dewatering of anaerobically digested sludge from a municipal wastewater treatment plant.

2.03 DESIGN REQUIREMENTS

A. Design requirements of unit specified shall be understood to establish minimum requirements only. The equipment, when installed and operating, shall meet or exceed specified minimum performance requirements.

B. Design in accordance with:
   1. Minimum overall belt width, meters: 2.2.
   2. Minimum effective filtration areas, square feet: 140 total.
   3. Gravity zone: 65. Area determined on basis of only area supported by belt support grid.
   4. Wedge zone: 38. Area determined on basis of only lower belt area supported by belt support grid.
   5. High pressure zone: As needed to meet performance requirements.

C. Design to accommodate solids up to and including 5/8 inch in any dimension without jamming, clogging, or overflow. The press shall be designed for continuous operation under conditions set forth in this section.

D. Configure to afford an unimpeded view of sludge in gravity dewatering section.

E. Design belt filter presses for continuous operation.

F. The belt filter presses shall be of continuous belt design with three dewatering zones including a gravity drainage section, followed by a wedge zone and an increasing pressure, drum and roller zone to yield cake dryness required. The machine shall be of type, which entrains sludge between two continuous open meshed belts with a system of perforated and solid rollers. A belt tension system shall act on these rollers exclusively to provide increasing pressure as sludge advances toward discharge of machine. A third and separate belt will be allowed for gravity section if required per standard configuration. Belt filter press shall be complete with all necessary motors, gear drives, hydraulic system, control panel, alarm system, belts and belt wash system, and appurtenances required for a complete and operable system. Dewatered sludge shall then be removed from belts with scrapers (doctor blades) and belts shall then be washed prior to receiving additional sludge.

G. Machine shall be completely factory assembled and tested, unless otherwise specified herein. The main frame assembly shall require only bolting to floor and connection of external piping and electrical wiring. Flocculation devices, belts, pre-dewatering drums, and other equipment which might be damaged during shipping if mounted on main frame shall be installed following shipment by a representative of manufacturer. All electrical components located on machine shall be pre-wired at factory except connections between machine and control panel which will be completed in field.

H. Machine shall be designed and constructed in such a manner so as to be suitable for continuous heavy-duty use in a humid and corrosive atmospheric environment.

I. Routine maintenance shall be possible without taking machine out of service. Belts shall be replaceable without requiring disassembly of belt filter presses.

J. All parts requiring routine maintenance shall be readily accessible from outside of machine. Side panels, where furnished, shall be easily removable for access to machine's components and shall be securely attached to frame when in place.

2.04 PERFORMANCE REQUIREMENTS

A. As a minimum, press shall provide following performance characteristics when operating in accordance with conditions presented in this section:

B. Sludge Characteristics:
   1. Type of sludge: anaerobically digested primary and waste activated sludge
   2. Sludge Production:
      a. Design Annual Average Daily Sludge Production: 18,700 lb/day dry solids.
      b. Design Maximum Month Average. Sludge Production: 26,250 lb/day dry solids.
   3. Sludge Consistency:
      a. Average Sludge Dry Solids: 1.6 percent.
      b. Minimum Sludge Dry Solids: 0.6 percent.
      c. Maximum Sludge Dry Solids: 2.1 percent.

d. Volatile Solids Content: 55 to 78 percent

4. Belt Filter Press Parameters:
   a. Hours of Operation: 15 hours/day, 7 days/week for maximum month average sludge production.
   b. Design Sludge Flow Rate to Press at Average Percent Dry Solids: 160 gpm per press.
   c. Design Sludge Dry Solids Weight to Press: (Maximum Month Average Sludge Production): 1,000 lb/hr per press.
   d. Minimum Required Cake Dry Solids at Average Percent Feed Sludge Dry Solids: 20 percent.
   e. Minimum Solids Capture: 95 percent (filtrate solids plus washwater solids).
   f. Maximum Polymer Usage at Average Percent Feed Sludge Dry Solids: 23 lb/dry ton of feed sludge dry solids.
   g. Number of Belt Filter Presses Required: 3.

2.05 EQUIPMENT LAYOUT

A. The manufacturer is alerted to fact that sludge dewatering room layout is dictated by existing space available. The existing belt filter press layout is depicted in reference drawings contained in Request for Proposals.

B. The belt filter press equipment shall not extend higher than 10 feet which allows nominally three feet of headroom with structural ceiling of existing building when mounted to existing floor elevation. Similarly, required space for maintenance of equipment on any side must be possible given constraints of existing room. See reference drawings contained Request for Proposals.

C. The belt filter press equipment shall discharge dewatered cake onto existing horizontal belt conveyor. The existing conveyor belt runs at 2'-8" above existing floor elevation with side guards that extend to 3'-7" above floor. Cake shall be dropped onto conveyor at a maximum height of 1'-6" above belt. Proposed equipment shall be configured to operate with existing conveyor configuration. Provide vertical box chute with flexible shields at conveyor/box interface to facilitate containment of sludge cake while allowing conveyor cake to transverse through chute.

D. The manufacturer shall identify, as part of shop drawings for belt filter presses, complete layout of any platforms, access bridges and other auxiliary equipment recommended for operation or maintenance of equipment including visual inspection of top of gravity section.

2.06 MATERIALS

A. Frame: Steel, ASTM A36, hot-dip galvanized ASTM A123.

B. Splash guard, vertical box chute: ASTM A320, stainless steel, Type 316LT

C. Drum rollers: ASTM A320, stainless steel, Type 316L.

D. Rollers: Steel tube, ASTM A36, 1/2” minimum coated with Rilsan nylon II or ASTM A320 Type 316 stainless steel.

E. Roller shafts: ASTM A320, stainless steel, Type 316.

F. Hydraulic piping: ASTM A320, stainless steel, Type 316.

G. Plows and sludge distribution equipment: ASTM A320, Type 316, stainless steel, coated as specified.

H. Belt filter cloth: Monofilament polyester.

I. Belt seam closures (for seamed belts): ASTM A320, Type 316, stainless steel.

J. Spray headers: ASTM A320, Type 316, stainless steel.

K. Spray nozzles: ASTM 320, Type 316, stainless steel.

L. Drainage pans: ASTM A320, Type 347L, 316L, stainless steel.

M. Internal pressure piping: ASTM A320, stainless steel, Type 316.

N. Drains: schedule 80 PVC or ASTM 320, Type 316.

O. Anchor bolts and miscellaneous hardware, including bolts, nuts and washers: ASTM A320, Type 316 stainless steel.

P. Mixing drum and head box: ASTM A320, Type 316L stainless steel.

Q. Control panels: ASTM A320, stainless steel, Type 316L.

R. Materials specified are considered minimum acceptable for purposes of durability, strength, and resistance to erosion and corrosion. The manufacturer may propose alternative materials for purpose of providing greater strength or to meet required stress limitations. However, alternative materials must provide at least same qualities as those specified for purpose.

2.07 CORROSION PROTECTION

A. The ferrous metal and related components shall be protected by hot dip galvanizing. Hot-dip galvanizing shall be in accordance with ASTM A123 after fabrication. No cutting, welding, drilling, or punching will be permitted on any portion of frame after galvanizing.

B. All pre-painted purchased equipment such as electrical motors, gear boxes, hydraulic cylinders etc., are to be painted with a manufacturer's standard coating finish suitable for severe duty applications.

C. Control panel enclosures shall be NEMA 4X constructed of Type 316L stainless steel. The inside of enclosure shall be white.

2.08 FRAME

A. The press frame shall be designed to accommodate all operating and static loads with a factor of safety of not less than 5 and shall function without deflection, deformation, or vibration which will in any manner degrade performance of equipment. No disassembled component shall weigh more than 4,000 pounds.

B. Frame design shall evenly distribute all loads to supporting building structural system. Frames can be multiple leg configuration for floor or pedestal installation or skids for floor installation.

C. Lifting lugs shall be provided, and access platforms shall be recommended to afford convenient access to maintenance points throughout press.

D. Splash guards shall be provided to confine all liquid to within confines of existing drain containment basin. Splash guards shall be designed to permit convenient access to all interior portions of press for maintenance purposes.

E. In their principal load bearing direction, no unsupported frame spans greater than 84 inches will be permitted. The structural design of all framing members shall limit deflection to no more than 1/480 of span. Design maximum stresses shall not exceed 20 percent of material's yield strength. Upon completion of all fabrication work, all components of press' framing system shall be coated in accordance with requirements of paragraph “Corrosion Protection.”

F. Frame shall have accurately machined and positioned seats for all bearings, arranged to ensure and maintain absolute alignment of all rotating elements under all loading conditions.

G. Provide recommendation for anchor bolt system for cast-in-place installation using Type 316 stainless steel.

2.09 DRAINAGE

A. Drainage pans shall be provided under all dewatering and belt washing zones to contain all liquids and conduct this material to drain sump to be incorporated into machine's support base. The drainage pans, shields and piping shall be designed to confine all spray and splashed liquids and to conduct these to sump. Drained connections shall be self-venting to prevent overflow. The main sludge inlet area shall include a high-level overflow which shall discharge, through appropriate piping to sump beneath press. A NEMA 4X float switch shall be provided in drainage pan. The switch shall be set to close when sludge receptor area is near overflow elevation.

B. The low point of any drainage pan shall be provided with a connection for drain piping. Drainage piping shall be Schedule 80 PVC and shall be routed from each pan and shall terminate within confines of filtrate sump.

C. The drainage pans shall extend a minimum of 3-inches beyond belt width on both sides and shall have a minimum 1-inch depth at any given point. The drainage pans shall be constructed of a minimum 14-gauge Type 316L stainless steel.

2.10 BELT WASH SYSTEM

A. Both dewatering belts shall be provided with a washing system consisting of piping, nozzles, drip pans, and spray containment shields as required to clean area in contact with sludge prior to returning to pressing zones.

B. Stainless steel nozzles shall be designed with a self-cleaning mechanism to provide cleaning action without disassembly or interruption of operation.

C. Spray piping and nozzles shall be adequately braced and shall be of sufficient pressure rating to withstand pressure transients caused by sudden valve closures.

D. Spray water shall be contained within press enclosure.

2.11 SLUDGE CONDITIONING

A. The press shall be provided with a sludge conditioning system designed specifically for polymer aided flocculation of anaerobically digested sludges. The system shall be configured to prevent floc breakup during transport to gravity drainage section. The sludge conditioning device shall provide an appropriate, infinitely variable range of conditioning energies to assure economic flocculation of sludge under all conditions.

B. The sludge conditioning system shall be mounted upstream of press and shall consist of an in line, nonclog, variable orifice, Venturi-type mixer with a polymer injection ring. Static mixers with stationary baffles, modified check valves or mixers requiring electrical motors and controls, or tanks with mechanical mixers shall not be acceptable.

C. The sludge/polymer mixer assembly shall be Type 316L stainless steel with ANSI compatible flanges. The mixer assembly shall include an in-line polymer injection ring made of UHMW HDPE, flow splitting manifold, tubing and fittings between injection ring and manifold. Each polymer injection ring shall inject polymer at a minimum of four points located 90 degrees apart around circumference of ring. The inside diameter of ring shall not be less than 6-inches (diameter of sludge feed piping).

2.12 FILTERING MEDIUM

A. The filter belts shall be manufactured of a continuous weave of monofilament polyester wires. Filter belts may be of split type or continuous. Seams for split belts must be designed to fail before belt, be repairable and facilitate replacement. The seam shall be designed to prevent interference with doctor blades or any other belt press equipment. Regardless of design, belts shall be suitable for convenient replacement by operating personnel.

B. Belt seam closures shall be of stainless steel. Each belt shall be heat set, and all belt edges shall be double reinforced with 1/2” plastic band. Belt edges that are heat sealed only will not be acceptable. Each belt shall be pre-stretched to limit elongation to less than 3% of overall belt length. All belts, including separate high-tension belts supplied as part of machine, shall be capable of continuously withstanding a maximum tensile force of three times maximum tension that belt will be subjected to under normal operation.

2.13 ROLLER ASSEMBLIES

A. Drum rollers, if provided, shall have one inch minimum diameter perforations spaced at not more than 3”. Scoop blades or similar devices shall be provided to extract filtrate from center of drum.

B. All rollers shall be designed for a maximum deflection of 0.05 inch at center when under maximum loading. Maximum roller loading shall include roller mass forces and tension forces resulting from belt drive and belt tension. Belt tension shall be based upon not less than 200 pounds per inch of belt width and drive tension shall be calculated on basis of a belt speed of not less than 15 feet per minute.

C. Nonperforated rollers shall be constructed of ASTM A 36/A 36M or ASTM A 500 carbon steel and coated as specified hereinafter, or from Type 316 stainless steel, each with a continuous through shaft or with stub shafts supported by double, separated end plates, all welded in place. Stub shafts welded directly to single end plates are not acceptable. All welding shall be performed by qualified and certified welding operators in accordance with applicable AWS Standards. Minimum roller wall thickness shall be 1/2”. Perforated rollers shall be constructed of Type 316 stainless steel. Drive rollers, regardless of material of construction shall be coated with a vulcanized rubber type coating. Drive rollers shall be provided with drainage channels or other suitable means to assist in removal of water and prevent slippage.

D. All rollers shall be supported with heavy-duty bearings in sealed, splashproof enclosures. Bearings shall be self-aligning, roller or ball bearing type, in horizontally split cast-iron housings with triple labyrinth seals. Alternately bearing shall be one piece machined bearing housing with a bolted and gasketed steel end plate with a quadruple seal. Bearings shall be outboard mounted and field replaceable without affecting factory alignment or without major disassembly. Bearings shall have an ABMA L-10 rating of 800,000 hours of operation based upon all forces and loads, including belt tension, roller mass and drive torque loads. Load calculations shall be based on both belts at a simultaneous belt tension of 50 pounds per lineal inch of belt and at a belt speed of 15 feet per minute.

E. Grease fittings shall be extended to face of press frame and shall be grouped in one location to facilitate maintenance operations. Bearings shall be regreaseable while press is running.

2.14 BELT TRACKING AND TENSIONING SYSTEMS:

A. The press shall be provided with both tracking and tensioning systems to insure reliable operation. The belt tracking and tensioning system shall incorporate hydraulic belt adjustments. All hydraulic piping shall be rigidly and firmly anchored to structural frame of press. All lines shall be sized according to intended use and operating pressure with a factor of safety of not less than 10.

B. Hydraulic systems shall include all pumps, reservoirs, piping, and controls for system operation. The hydraulic power pack, including pump, reservoir and pressure controls, shall be located in a position which does not impede access to press.

C. Belt tracking system:
   1. Automatic sensing devices shall be provided to actuate automatic belt tracking system and assure proper alignment of belts at all times. The sensing devices shall continuously monitor position of belt, allowing alignment roller to effect minor belt position adjustments continuously to maintain belt properly positioned within belt track. The belt tracking system shall be designed so that all belt position adjustments are performed smoothly without sharp, sudden movements of filter belt or alignment roller. The belt tracking system shall be designed to minimize belt and roller wear and extend working life of filter belts.
   2. NEMA 4X limit switches shall be provided to detect malfunctioning of tracking system. The switches shall be designed to detect gross belt misalignment and shall open to indicate belt misalignment, initiate a shutdown signal, and activate a remote alarm.

D. Belt Tensioning Assembly:
   1. Hydraulically adjusted belt tensioning assembly shall be provided. Belt tension adjustment shall be through cylinder actuators for hydraulic systems acting on takeup roller hubs.
   2. Tension adjustment devices acting on center of roller will not be permitted. Means shall be provided to maintain roller alignment and provide even tension throughout width of belt. Belt tension shall be variable and tension adjustment shall be possible while machine is in operation. Either system shall maintain a constant tension on belt regardless of cake thickness. A pressure gage or similar device shall be provided to indicate actual belt tension, and normal operating limits shall be indicated on face of gage.
   3. The belt tensioning system shall be designed to ensure simultaneous and parallel movement of tensioning roller ends during adjustment and to accommodate at least 3 percent increase in belt length. Belt tension shall be infinitely variable and shall be adjustable without shutdown of machine.

E. Hydraulic System
   1. Each hydraulic system (one for each press) shall include hydraulic pump and motor, reservoir with sight glass, filters, valves, gages, piping, and controls required for system operation. Provide a suitable pressure switch in a NEMA 4X enclosure to activate an alarm on low hydraulic fluid pressure. The hydraulic system shall be designed for location up to 25 feet remote from belt filter press or may be incorporated in belt press framework.
   2. The hydraulic pump motor shall be totally enclosed, fan cooled motor with Class F insulation, suitable for operation on 460-volt, 3-phase, 60 Hz power. Space heaters, 120-volt single-phase, shall be placed in each motor frame.
   3. Hydraulic system components shall be mounted on a rigid common baseplate suitable for floor or wall mounting if remotely located. Baseplate shall be stainless steel.
   4. Controls:
      a. Equipment described herein shall be contained within belt filter press control panel.
      b. Two combination circuit breaker/magnetic across line motor starters with 120-volt control circuits for pump motors. Each starter shall have three thermal overload relays of melting alloy type. Each starter shall be provided with a normally closed starter contact for control of space heater furnished with motor.
      c. Control logic shall be provided for Owner to program within plant SCADA system.

2.15 GRAVITY DEWATERING SECTION

A. The gravity dewatering zone shall accept flocculated sludge from sludge conditioning system, and permit free water contained within conditioned sludge to readily separate from sludge and drain to a collection pan.

B. The gravity drainage section shall be furnished with a sludge inlet assembly consisting of a distribution chute and leveling weir designed to evenly distribute conditioned sludge across entire effective width of moving filter belt. The materials in contact with sludge in distribution area shall be Type 316L stainless steel with a minimum thickness of 14-gauge.

C. The conditioned sludge shall be contained on belt with adjustable containment barriers equipped with replaceable rubber seals to prevent leakage. The containment barriers shall be constructed of minimum 14-gauge Type 316L stainless steel, and shall be mounted on both sides of belt and at

sludge feed end of gravity section. The side skirts shall be equipped with urethane seals or other elasticized materials to prevent spillage of sludge. The replaceable rubber seals shall be attached to containment barriers with a friction fit.

D. The gravity drainage section shall be furnished with chicanes (plows) to adequately furrow conditioned sludge to promote drainage of water from sludge. All surfaces of chicanes and other devices contacting filter cloth shall be coated with teflon or similar smooth material to prevent rapid deterioration of belt surface. Each row of chicanes shall be provided with a single lifting handle or automatic lifting system, designed to remove entire row of chicanes at least 6” from belt, out of sludge flow, to facilitate cleaning. Chicanes shall be designed to be individually adjustable laterally and shall pivot to allow them to pass over obstructions on belt. Each set of chicanes shall be mounted on a Type 316L stainless steel horizontal support bar.

E. The gravity dewatering belt shall be supported to minimize belt sagging by either a grid, or a plate designed to minimize belt wear and facilitate free drainage of filtrate. The support shall be a minimum 2-inches wider than belt on each side. Wear strips, if used, shall be replaceable without removing or disassembling gravity section sidewalls and chicane assemblies.

2.16 WEDGE COMPRESSION SECTION

A. Following gravity drainage section, sludge shall enter a low-pressure section where converging belts shall exert continuously increasing pressure.

B. Means shall be provided to adjust angle of convergence while press is in operation to permit operators to optimize dewatering operations. Containment seals shall be provided on both sides of wedge compression section to prevent sludge from escaping.

C. The wedge compression section shall be configured to permit liquid to escape through both belts.

2.17 ROLL PRESSURIZATION SECTION

A. Following wedge compression section, sludge shall enter a dewatering section of increasingly greater pressure, where two belts pass sequentially over series of rollers of decreasing diameter.

B. The roller diameters and belt tensioning system, in combination, shall exert increasingly greater pressure as liquid is removed from sludge, thereby effecting efficient dewatering, yet assuring efficient capture of solids.

2.18 SCRAPER BLADES AND DISCHARGE CHUTE

A. Replaceable scraper blades shall be provided to efficiently separate dewatered cake from belt. A discharge chute shall be provided to conduct cake to middle of belt conveyor for removal. The scraper blade shall be mounted opposite a belt roller to insure efficient cake removal. The pressure exerted by scraper blade against belt shall be adjustable while press is in operation. Adjustable weights on lever arms will not be an acceptable means of providing this feature. Operation of doctor blades shall be in such a manner as to minimize wear to belt seam.

B. Doctor blades shall have springs or counterweights to maintain pressure against belts, constructed of rubber, plastic or fiberglass reinforced plastic, readily removable and positioned on each belt at discharge end of machine to effectively remove sludge cake from belts. All springs and hardware shall be of stainless steel. A lifting device shall permit movement of blades away from belts for cleaning, all without machine shutdown. Alternately, hydraulic system can be used to operate and lift doctor blades.

2.19 ELECTRICAL

A. Control panel shall accept a 460 volt, 60 hz, 3-phase ac power input. A main disconnect circuit breaker and operator mechanism shall be included. When disconnect is in open position all power shall be removed from control system.

B. All conduit shall be Schedule 40 PVC, standard weight galvanized conduit with PVC coating, or standard weight conduit coated and lined with fusion applied epoxy as specified. Limit switches, float switches, and all other electrical devices shall be NEMA 4X enclosures with contact rated not less than NEMA A300. Conduit shall be routed to be protected by belt press frame where possible.

C. Switches and other 120-volt devices shall be wired in conduit to a labeled, gasketed, NEMA 4X junction box located on press frame. The junction box shall include terminal blocks for interface of all factory-wired devices with instrumentation and controls specified in herein.

D. A mushroom head emergency stop push button station or emergency lanyard shall be provided on each side of machine. The device shall have a separate manual reset.

E. Each belt filter press unit shall be provided with a nylon "pull cord" on both sides in ring supports to provide emergency shutdown of all belt filter press motors and appurtenant equipment. Trip switch contacts shall be DPDT. rated 10 amperes at 120 volts.

2.20 DRIVE UNIT

A. The belts and rollers shall be driven by a variable frequency drive unit to achieve infinitely and uniformly variable speed adjustment while press is in operation through manual adjustment of a control device located on control panel. The variable frequency device, complete with 1:1 isolation transformer, shall be provided separately by belt press manufacturer for installation in motor control lineup specified.

B. Drive motors shall be rated for inverter duty, variable frequency service designed for bilt drive purpose and rated as premium efficient motors. Motors shall have totally enclosed fan cooled (TEFC) enclosure. Motors shall be rated at 150% nameplate horsepower of required horsepower maximum service condition. Provide motor speed indicator readout for in main press control panel for all drives. Variable frequency drives for shall be furnished within press control panel.

C. All portions of drive unit shall be totally enclosed with all gearing running in oil or grease lubricated and all drive chains and sprockets completely enclosed in a permanently greased housing.

D. Speed reducer: AC motor driven, helical shaft mounted gear reducers, with a 1.15 service factor. Worm gear reducers shall not be acceptable. The speed reducer housing shall be cast iron or fabricated steel welded construction and shall be totally enclosed, dustproof, and oil tight. Speed reducers shall be rated for minimum AGMA Class II service.

E. Drive controller: Drive motors shall be controlled by a single variable frequency drive. The variable frequency drive controller shall provide 0 – 460 volts ac, 2 - 60 Hz output capable of driving belt at from 3 to 15 feet per minute.

2.21 CONTROLS

A. Belt filter press system will be controlled from existing SCADA system. Belt filter press equipment manufacturer shall provide control description and I/O list that will be installed in SCADA system by a third party. Control information submitted shall incorporate control of all systems provided by belt filter press supplier including, belt filter press, hydraulic system (if provided)). Belt filter press supplier shall also provide control panels described herein.

B. BFP master (main control panel for each belt filter presses shall be supplied with a stainless steel 33" x 57" backpanel/subpanel that shall replace that within existing freestanding BFP main control panels. Panel shall accept 460 VAC, 60 Hz, 3-phase power and contain following main control components:
   1. Variable frequency drive controller with short-circuit and overload protection for main belt drive,
   2. Motor starters with short-circuit and overload protection for hydraulic pump.
   3. Terminal landing strip shall be provided for control components and connection to existing SCADA system.

C. Each belt filter press shall be supplied with a local control panel rated for NEMA 4X and constructed of stainless steel that shall be frame or wall mounted. Panel will be located locally to belt filter presses and shall contain selector switches required for maintenance which included extending and retracting belt tensioning system and forward and reversing direction of belt movement, in addition to an emergency stop pushbutton.

D. Main control panel shall be completely pre-wired and factory tested prior to shipment.
   1. Motor starters: Full-voltage, nonreversing, IEC style across line units. Coils shall be 120 volts ac. Allen Bradley Style 140Mw/100 contactors.
   2. Speed controllers: Capable of outputting a 4-20mA dc or 0-10 volts dc setpoint control signal and accept a 4-20mA dc or 0-10 volts dc status signal. Controller shall be capable of PID control. Red Lion P48 or equal.
   3. Pushbuttons: Heavy-duty, oil tight/watertight, corrosion resistant units rated for NEMA 4X service. Contact blocks shall be rated for 10-ampere continuous service. Allen Bradley Type 800 H, or equal.
   4. Pilot lights: Heavy-duty, oil tight/watertight, corrosion resistant units rated for NEMA 4X service. Units shall be 120 volts ac transformer type. Allen Bradley Type 800 H, or equal.
   5. Terminal blocks: High-density, spring cage clamp style, with 600-volt rating. Wago Class 280, or equal.
   6. Variable frequency drive: UL listed and shall be Allen Bradley Powerflex 400 style, and provide for Ethernet communications.

PART 3 EXECUTION

3.01 INSTALLATION - GENERAL

A. Belt filter presses shall be completely factory assembled. Erection shall require only bolting to foundation and connection of external piping and wiring.

3.02 FIELD TESTING AND NONCOMPLIANCE PENALTIES

A. Functional test:
   1. Perform functional testing for each belt filter press installed.
   2. Prior to system start-up, system components shall be inspected for proper alignment, proper connection, and satisfactory operation.
   3. Manufacturer's representative shall inspect installation, check for lubrication and minor adjustments, provide certification that system components have been installed correctly and are ready for operation. Notify Owner and Engineer prior to demonstrating machine operability.
   4. Demonstrate machine is operable by successfully running for two consecutive 8-hour days without mechanical, electrical, or control-induced malfunction.

B. Initial Performance test:
   1. Performance test shall not begin until functional testing has been completed to Owner's and Engineer's satisfaction.
   2. After start-up, manufacturer shall conduct a performance test using Owner's sludge to determine actual system operating conditions and verify that unit meets minimum requirements specified herein.
   3. Prior to performance tests, manufacturer shall perform optimization testing as necessary to determine and recommend most effective type of polymer to produce specified performance.

4. Owner shall provide sludge feed, water, electrical power, and sludge cake disposal necessary to conduct performance tests. Polymers required shall be provided by Owner at recommendation of manufacturer.
5. Cost of laboratory testing necessary to confirm performance for initial test shall be borne by Owner.
6. If, after a minimum of five 7-hour test runs, with 3 rounds of sampling per run in opinion of Owner, system meets minimum performance requirements specified herein and supply sludge was within specified operating ranges of same paragraph, Engineer will recommend, by letter, that press met initial performance testing requirements and authorizes extended performance testing.
7. If, in opinion of Engineer, performance test results do not meet requirements specified herein and supply sludge was within specified operating ranges of same paragraph, Engineer will notify Owner and Contractor of failure of initial performance testing.
8. In case of nonacceptable performance, manufacturer shall then have 30 days in which to perform at its sole expense, supplemental testing, equipment adjustments, changes or additions and to perform retest of nonacceptable system.

C. Extended performance testing:
1. Do not begin until initial performance test has been completed to Owner's and Engineer's satisfaction.
2. Extended performance testing shall consist of a 60-day performance period where manufacturer-trained Owner staff operate dewatering equipment utilizing coagulant and polymer combination utilized in initial performance testing.
3. Owner will make daily measurements of dewatering equipment performance - coagulant and polymer consumption, power use, influent solids characteristics, dewatered sludge cake solids concentration, solids capture, and average daily throughput. Results will periodically be communicated to equipment manufacturer.
4. Owner will also evaluate equipment operability and reliability during this performance period.
5. Equipment manufacturer has right to provide a representative onsite during testing period to observe equipment performance and operator activities.
6. Extended performance testing results will be reviewed by Owner and Engineer to determine:
   a. Belft filter press has met specified performance requirements
   b. Belt filter press has demonstrated its operability and reliability.
   c. Results will be shared with equipment manufacturer.
7. If extended performance test results are acceptable, Engineer will recommend, by letter, official acceptance of belt filter press.
8. If, in opinion of Engineer, performance test results do not meet requirements specified herein, Engineer will notify Owner and Contractor of nonacceptable performance.
9. In case of nonacceptable performance, manufacturer shall then have 30 days in which to perform at its sole expense, supplemental testing, equipment adjustments, changes or additions including piping and chemical feed points, and to perform extended performance retest of nonacceptable system.
10. After retesting, should equipment fail to meet minimum specified performance requirements equipment will be rejected. Contractor shall replace failed equipment with different model units appropriate for meeting specified performance at no additional cost to Owner. As an alternative Contractor may elect to remove their failed equipment, provide full refund of cost of equipment to Owner and pay a penalty in amount of 25% to assist Owner in obtaining and installing alternate equipment. Failure to achieve specified performance criteria upon retesting shall constitute basis for Owner to seize performance bond as specified above.

3.03 OPERATIONAL INSTRUCTIONS AND TRAINING

A. Provide training in accordance with Section 01 43 33.

B. Upon completion of training, submit certification Form B provided at end of this section.

3.04 MANUFACTURER INSPECTION AND AFFIDAVIT

A. Furnished one or more experienced service engineers experienced in installation, adjustment, and start up in accordance with Section 01 43 33.

B. Upon completed installation, acceptable performance testing, and completion of Owner's training, submit a signed affidavit certifying that supplier or manufacturer has observed and accepts that all stages of construction, installation, testing, and training have been adequately performed. The affidavit shall conform to form and style of Form C provided at end of this section.

C. Provision of inspection, approval, and affidavit by belt filter press supplier or manufacturer shall in no way relieve manufacturer of any responsibilities or requirements of this contract, including system installation, testing, commissioning, and guarantee specified above.

END OF SECTION

1) J. M. Brady
2) D. K. Mathias

Form A. UNIT RESPONSIBILITY CERTIFICATION FORM

CERTIFICATE OF UNIT RESPONSIBILITY

FOR SPECIFICATION SECTION 46 76 21

BELT FILTER PRESSES

The undersigned manufacturer of driven equipment ("manufacturer") accepts unit responsibility for all components of equipment furnished to the Project under specification Section_____ , and for related equipment manufactured under sections_____, _____, and _____ .

We have reviewed the requirements for this section, including but not limited to drivers, supports for driving and driven equipment and all other specified appurtenances to be furnished to the Project by manufacturer. And, we have further reviewed, and modified as necessary, the requirements for associated variable speed drives and motor control centers. We hereby certify that all specified components are compatible and comprise a functional unit suitable for the specified performance and design requirements whether or not the equipment was furnished by us. We will make no claim nor establish any condition that problems in operation for the product provided under this specification Section _____ are due to incompatibility of any components covered by this Certificate of Unit Responsibility. Nor will we condition or void any warranty for the performance of the product of this specification Section _____ due to incompatibility of any components covered under this Certificate of Unit Responsibility.

Our signature on this Certificate of Unit Responsibility does not obligate us to take responsibility for, nor to warrant the workmanship, quality, or performance of related equipment provided by others under specification sections _____, _____, and _____. Our obligation to warranty all equipment provided by us shall remain unaffected.

Notary Public

Commission expiration date

Seal:

Name of Corporation

Address

By:

Duly Authorized Official

Legal Title of Official

Date

Form B. MANUFACTURER'S INSTRUCTION CERTIFICATION FORM

Contract No:	Specification Section:
Equipment name:	
Contractor:	
Manufacturer of equipment item:	

The undersigned manufacturer certifies that a service engineer has instructed the wastewater treatment plant operating personnel in the proper maintenance and operation of the equipment designated herein.

Operations Check List (check appropriate spaces)	
Start-up procedure reviewed	
Shutdown procedure reviewed	
Normal operation procedure reviewed	
Others:	

Maintenance Check List (check appropriate spaces)	
Described normal oil changes (frequency)	
Described special tools required	
Described normal items to be reviewed for wear	
Described preventive maintenance instructions	
Described greasing frequency	
Others:	

Manufacturer	Signature of Contractor Representative Date
Signature of Authorized Representative	
Date	Signature of Authorized Representative Date

Form C. MANUFACTURER'S INSTALLATION CERTIFICATION FORM

Contract No:	Specification section:
Equipment name:	
Contractor:	
Manufacturer of equipment item:	

The undersigned manufacturer of the equipment item described above hereby certifies that he has checked the installation of the equipment and that the equipment, as specified in the project manual, has been provided in accordance with the manufacturer's recommendations, and that the trial operation of the equipment item has been satisfactory.

Comments:

Manufacturer	Contractor
Signature of Authorized Representative	Signature of Authorized Representative
Date	Date

PART 1 GENERAL

1.01 DESCRIPTION

A. Scope:
1. This section specifies continuous belt filter press equipment for ~~two~~ nominal 2 meter belt filter presses as specified and required to provide a complete and operating system for dewatering temperature-phased (Thermophilic-Mesophilic) anaerobically digested sludge at the Iowa City South Wastewater Treatment Plant. Digested sludge is a combination of primary sludge and secondary sludge from a liquid treatment process that at times experiences enhanced biological phosphorus removal.
2. The belt filter press equipment manufacturer shall prepare all Shop Drawings and other submittals for all components furnished under this Section.

B. Type:
1. The belt filter press shall be specifically designed for wastewater sludge service and shall be of the continuous belt design with three distinct dewatering sections: gravity drainage, wedge compression, and roll pressurization, to yield the cake solids concentration required under this section. Equipment employing other types of dewatering sections or combinations of dewatering sections other than those specified will not be accepted. Equipment utilizing prethickening devices such as added gravity belts, rotary prethickeners, or other such devices will also not be accepted.
2. The machine shall be of the type which, in the wedge and roll pressurization zones, entrains the sludge between no more than two continuous open meshed belts with a system of rollers and belt tensioning devices acting on the rollers exclusively to provide ever increasing pressure as the sludge advances toward the discharge point of the machine. The gravity section may utilize a separate belt.
3. Equipment provided under this specification shall be of the industrial type, specifically designed for the dewatering of anaerobically digested sludge from a municipal wastewater treatment plant.

~~C. Not Used~~

~~D.~~C. Design Requirements:
1. The belt filter press shall be designed in accordance with the following:

Minimum overall belt width, meters	2.2
Minimum effective filtration areas, square feet	140 total
Gravity zone	65[1]
Wedge zone	~~40~~[2] 38[2]
High pressure zone	As needed to meet Performance requirements

Notes:

[1]*Area determined on the basis of only the area supported by the belt support grid.*

[2]*Area determined on the basis of only the lower belt area supported by the belt support grid.*

2. The press shall be designed to accommodate solids up to and including 5/8 inch in any dimension without jamming, clogging, or overflow. The press shall be designed for continuous operation under the conditions set forth in this section.
3. The press shall be configured to afford an unimpeded view of the sludge in the gravity dewatering section.

~~E.~~D. Performance Requirements:

1. As a minimum, the press shall provide the following performance characteristics when operating in accordance with the conditions presented in this section:
2. Sludge Characteristics:
   a. Type of Sludge: anaerobically digested primary and waste activated sludge
   b. Sludge Production:
   Design Annual Average Daily Sludge Production: 18,700 lb/day dry solids.
   Design Maximum Month Average. Sludge Production: 26,250 lb/day dry solids.
   c. Sludge Consistency:
   Average Sludge Dry Solids: 1.6 percent.
   Minimum Sludge Dry Solids: 0.6 percent.
   Maximum Sludge Dry Solids: 2.1 percent.
   d. Volatile Solids Content: 55 to 78 percent
3. Belt Filter Press Parameters:
   ~~e.~~a. Hours of Operation: 15 hours/day, 7 days/week for maximum month average sludge production.
   ~~f.~~b. Design Sludge Flow Rate to Press at Average Percent Dry Solids: 160 gpm per press.
   ~~g.~~c. Design Sludge Dry Solids Weight to Press: (Maximum Month Average Sludge Production): 1,000 lb/hr per press.
   ~~h.~~d. Minimum Required Cake Dry Solids at Average Percent Feed Sludge Dry Solids: 20 percent.
   ~~i.~~e. Minimum Solids Capture: 95 percent (filtrate solids plus washwater solids).
   ~~j.~~f. Maximum Polymer Usage at Average Percent Feed Sludge Dry Solids: 23 lb/dry ton of feed sludge dry solids.
   ~~k.~~g. Number of Belt Filter Presses Required: ~~two~~three.

~~F.~~E. Service Conditions:

1. Environmental Conditions:
   a. The sludge filter press will be located in the Sludge Processing Facility in a ventilated room as specified. The press will be floor mounted ~~on a raised concrete pedestals arranged around a~~above center drainage sump ~~directly beneath the press~~. The press will be subjected to frequent hosedown for cleaning purposes. The temperatures within the press room may be expected to range between 40 and 100 degrees F; relative humidity will range between 50 and 100 percent.
   b. It may be expected the material discharged to each press will be in an actively digesting state, and small quantities of digester gas may be present. The gas is expected to contain methane in concentrations of up to 70 percent, with the remainder comprised of principally carbon dioxide with up to 2000 parts per million dissolved hydrogen sulfide and trace quantities of nitrogen. While it is very unlikely explosive concentrations of methane will be present in the room atmosphere, the Manufacturer is advised that corrosive agents (moisture, hydrogen sulfide gas, sulfuric acid, etc.) will be present at all times. Accordingly, materials shall be selected to provide appropriate resistance to corrosion and every effort shall be exercised in the manufacture of the equipment to eliminate crevices, unsealed overlapping plates and similar inaccessible areas where corrosion can take place without allowing access for application of preventive measures.
2. Controls:
   ~~c.~~a. The press, along with the associated sludge and polymer pumps, will be operated at a variable rate to optimize combinations of feed rate, polymer addition and belt speed for various conditions of sludge concentration, organic/inorganic solids percentage and other characteristics. Control for feed pumps and polymer pumps will be by plant SCADA system.
3. Utility Services:
   ~~d.~~a. Water for belt cleaning sprays will be strained plant effluent water. The water pressure at the press will range from 85 to ~~90~~ 135 pounds per square inch. ~~If greater~~

~~pressure is required to achieve the performance requirements specified in this section, a frame mounted end suction centrifugal booster pump, located adjacent to the press structure, shall be provided with the press to supply the flow and pressure required. The pump motor's starter shall be located in the main control panel along with the other starters serving the press equipment. The cost of the pump, motor starter, conduit, base, conductors and all appurtenances required to conform the booster pump installation to the standards for this project shall be borne by the Manufacturer.~~ Water consumption shall not exceed ~~95~~ 120 gallons per minute. Water for cleaning sprays will be strained plant effluent, which is expected to contain up to 10 mg/l chlorine, small quantities of biological floc and dilute concentrations of industrial solvents.

~~e.~~b. Polymer, in diluted solution form, will be pumped to the press polymer/sludge mixing section by a variable speed, positive displacement pump.

~~f.~~c. Power for motors ~~1/2 horsepower and larger~~ will be provided at 480 volts AC, 60 Hz, 3 phase. The maximum recommended belt speed for performance in accordance with paragraphs 1.02 Extended Limited Warranty shall correspond to operation of the drive motor at 480 volts AC, 60 Hz.

~~g. Air for operation of the press pneumatic systems, if required, shall be obtained from compressed air system provided by manufacturer.~~

4. Applied Solids:

~~h.~~a. Anaerobically digested primary and waste sludge from the treatment process will be pumped to the press by dedicated, variable speed positive displacement feedstock pump. The ratio of primary to secondary solids is expected to vary between 0.75 and 1.5. The sludge is expected to contain quantities of industrial wastes including solvents, petroleum products, grit, hair, rags, grease, plastic and rubber goods, and organic solids in concentrations ranging from 1.5 to 5 percent. The filter press will be routinely operated with an inlet solids concentration of 1 to 2 percent.

~~i.~~b. Sludge delivered to the press will have a temperature of 55 to 100 degrees F and will have a pH which may range from 5 to 8.

1.02 QUALITY ASSURANCE

A. References:

1. This section contains references to the following documents. They are a part of this section as specified and modified. Where a referenced document contains references to other standards, those documents are included as references under this section as if referenced directly. In the event of conflict between the requirements of this section and those of the listed documents, the requirements of this section shall prevail.
2. Unless otherwise specified, references to documents shall mean the documents in effect at the time of Advertisement for Bids or Invitation to Bid (or on the effective date of the Agreement. If referenced documents have been discontinued by the issuing organization, references to those documents shall mean the replacement documents issued or otherwise identified by that organization or, if there are no replacement documents, the last version of the document before it was discontinued. Where document dates are given in the following listing, references to those documents shall mean the specific document version associated with that date, regardless of whether the document has been superseded by a version with a later date, discontinued or replaced.

Reference	Title
ASTM A36/A36M	Structural Steel
ASTM A123	Zinc (Hot-Dip Galvanized) Coatings on Iron and Steel Products
ASTM A320/A320M	Alloys--Steel Bolting Materials for Low-Temperature Service
AWWA C213	Fusion Bonded Epoxy Coating for the Interior and Exterior of Steel Water Pipelines

Reference	Title
NEMA 250	Enclosures for Electrical Equipment (1000 Volts Maximum)
NEMA ICS 2	Industrial Control Devices, Controllers and Assemblies
NEMA ICS 6	Enclosures for Industrial Controls and Systems
AGMA	American Gear Manufacturers' Association
ABMA	American Bearing Manufacturers Association

3. Obtain all equipment included in this Section regardless of the component manufacturer from a single belt filter press manufacturer.

B. Unit Responsibility:
   1. The unit responsibility as specified is assigned to the belt filter press manufacturer for the equipment specified in this section. A certificate of unit responsibility shall be provided.
   2. The unit responsibility manufacturer shall coordinate selection, coordinate design, and shall provide all mechanical equipment assembly components such that all equipment components furnished under the specification for the equipment assembly, and all equipment components specified elsewhere but referenced in this specification, is compatible and operates reliably and properly to achieve the specified performance requirements. Agents, representatives or other entities that are not a direct division of the driven equipment manufacturing corporation shall not be accepted as a substitute for the driven equipment manufacturer in meeting this requirement.

C. Extended Limited Warranty:
   1. Manufacturer of the belt press shall provide an extended warranty for the Owner. The warranty shall cover troubleshooting investigations, repair and replacement of parts due to defective materials or workmanship for the durations listed below following the date of Substantial Completion. Provide a certificate from the belt press manufacturer which defines the conditions and terms of the warranty as outlined below. All costs for the extended warranty shall be included in Manufacturer's bid. The manufacturer's certificate of extended warranty for the belt filter press equipment shall include the following:
      a. Warrant the frame and the coating for a period of three years from the date of Substantial Completion. Any defects or corrosion occurring within the warranty period shall be repaired or replaced, at no additional cost to the Owner.
      b. Warrant the rollers and the coating to be free from manufacturing defects for a period of three years from date of Substantial Completion. Neither the rollers nor coating shall require preventive maintenance during the warranty period. The warranty shall include all parts and labor and shall cover the cost of repairing or replacing any item that fails during the warranty period, provided the damage is not due to misuse or neglect by others.
      c. Warrant the complete bearing assembly, as specified herein, for a period of five years from date of Substantial Completion. The warranty shall include all parts and labor for repairing or replacing any bearing assembly part that fails during the warranty period.
   2. Belt Life Guarantee:
      ~~d.~~a. Manufacturer shall guarantee that the belt life of each belt furnished will not be less than 4,500 hours. Belts not providing this wearability under normal usage shall be replaced. Belts providing less than 2,000 hours shall be replaced at no additional cost to Owner. Belts providing more than 2,000 hours will be paid for by Owner on a pro rata basis.

   Performance Bond
      ~~e.~~b. Upon award of the equipment supply contract, after completion of the pilot testing, the selected supplier shall provide a warranty that the equipment will perform as required in paragraph 1.01.E Performance Requirements. The warranty shall bind the

equipment manufacturer and shall be backed by a performance and maintenance bond in the amount of 100 percent of the cost of the equipment. An irrevocable letter of credit, drawn on a U.S. government-insured banking institution, may be substituted for the specified bond. The warranty must be supplied to the Owner by the Manufacturer prior to start-up of the equipment and must be in a form acceptable to the Owner. The performance bond shall be limited to all direct costs, including labor, and consequential costs relating to any required remedy, including replacement of the equipment, associated with failure of the equipment to perform as specified in paragraph 1.01.E Performance Requirements.

D. Experience:
   1. The manufacturer shall have a minimum of 5 years experience in the design and fabrication of belt filter presses for sludge dewatering in wastewater treatment plants.
   2. Manufacturer shall be able to demonstrate a minimum of 10 installations within the United States in wastewater applications similar to that herein specified. At minimum five of the installations shall have been in operation for a minimum of five years.
   3. A summary of the required installations shall be submitted including:
      a. Location installed.
      b. Contact information of end user.
      c. Year installed.
      d. Number of units and belt width.
      e. Type of sludge dewatered (e.g. primary, secondary, combination, digested, etc.).

1.03 SUBMITTALS

A. The following submittals shall be provided by the supplier to whom the contract is awarded and when the noted activities have been completed and within the deadlines specified in the references:

~~A. **Submittals** The following information shall be submitted as part of the proposal: to be used as part of the evaluation of the vendor supplied equipment:~~
   1. A copy of this specification section, with addendum updates included, and all referenced and applicable sections, with addendum updates included, with each paragraph check-marked to indicate specification compliance or marked to indicate requested deviations from specification requirements. Check marks (✓) shall denote full compliance with a paragraph as a whole. If deviations from the specifications are indicated, and therefore requested by the Manufacturer, each deviation shall be underlined and denoted by a number in the margin to the right of the identified paragraph, referenced to a detailed written explanation of the reasons for requesting the deviation. The Owner shall be the final authority for determining acceptability of requested deviations. The remaining portions of the paragraph not underlined will signify compliance on the part of the Manufacturer with the specifications. Failure to include a copy of the marked-up specification sections, along with justification(s) for any requested deviations to the specification requirements, with the submittal shall be sufficient cause for rejection of the entire submittal with no further consideration.
   2. Manufacturer's literature, illustrations, specifications and engineering data including: general arrangement, outline drawings, dimensions, size, weight,foundation loadings performance data, and motor horsepower.
   3. Control description and I/O list for all equipment provided by belt filter press manufacturer.
   4. Drawings showing the entire belt filter press assembly, including material list and description of all components, structural members, auxiliary items and devices.
   5. Details of any additional equipment, structural items, and devices required to conform to the available space (Reference: paragraph 2.02).

~~Pneumatic belt tensioning system, if provided, including manufacturer literature and air flow rate, pressure, and dryness requirements.~~

6. Hydraulic belt tensioning system, if provided, including manufacturer literature and oil flow rate, pressure, and type requirements.

~~Washwater booster pump, if provided, design curve including operating points, materials of construction for all components, and motor information.~~

7. Motor size and model number.
8. Control panel dimensions.
9. Recommended platform layout for accessing critical components of the equipment.
10. The following product data shall be provided:
    a. Operating and maintenance information for proposed equipment in both .pdf and .docx format.
    b. Extended warranty specified in paragraph 1.02 Extended Limited Warranty.
11. Provide installation list as described in paragraph 1.02.D.
12. Certificate of Unit Responsibility attesting that the Manufacturer accepts unit responsibility in accordance with the requirements of this Section. No other submittal material will be reviewed until the certificate has been received and found to be in conformance with these requirements. Format shall be as provided in Form A at the end of this section or similar.

~~B. The following submittals shall be provided by the supplier to whom the contract is awarded and when the noted activities have been completed and within the deadlines specified in the references:~~

~~C.~~13. ~~Submit~~shall be in electronic pdf format. ~~report summarizing pilot testing results as specified in the pilot testing protocol~~.

~~D.~~14. Calculations certified by an professional engineer registered in Iowa, documenting the structural design of the frame and rollers per requirements specified in paragraphs 2.05 Frame and 2.05 Roller Assemblies. Calculations shall be submitted within two weeks of contract award.

~~E.~~15. Submit a written report of the field test results required in paragraph 3.02.

~~F.~~16. Within 30 days of contract award:

~~G.~~a. For all motors, data including type, size and model number; assembly drawings, operations and maintenance manual, rated size of the motors with calculations supporting the selected motor size, temperature rating.

~~H.~~b. Complete control panel and local control panel details, wiring diagrams showing all electrical connections to motors and variable speed controls, and logic diagrams.

~~I.~~c. Control diagrams and process and instrumentation diagrams relating to the submitted equipment.

~~J.~~d. Drawing and catalog information detailing all control devices in the control cabinets as well as overall panel layout interconnection diagrams and construction.

~~K.~~e. Detailed installation drawings, showing the size and location of all equipment, piping, electrical, instrumentation and structural connections.

~~L.~~f. Setting drawings, templates, and directions for the installation of anchor bolts and other anchorages.

~~M.~~g. Anchor bolt requirements for cast-in-place construction.

~~N.~~17. At a minimum of 30 days prior to the event noted:

~~O.~~a. Proposed on-site testing and start-up procedures.

~~P.~~b. Training course outline and proposed class materials per paragraph 3.03.

~~Q.~~18. Submit the following product data as noted:

~~R.~~a. Training Certification as specified in paragraph 3.03 within 30 days of training.

~~S.~~b. Affidavit as specified in paragraph 3.04 prior to contract completion.

~~T.~~B. The following submittals shall be provided when the noted activities have been completed and within the deadlines specified in the references:

~~Submit report summarizing pilot testing results as specified in the pilot testing protocol.~~

1. Submit a written report of the field test results required in paragraph 3.02.

1.04 DELIVERY, STORAGE AND HANDLING

A. Deliver materials to the Site to ensure uninterrupted progress of the work.

B. Provide storage instructions for equipment.

C. All boxes, crates and packages will be inspected upon delivery. Damage components shall be replaced or repaired in accordance with manufacturer's instructions at no additional cost to the Owner.

PART 2 PRODUCTS

2.01 General

A. Design requirements of the unit specified shall be understood to establish minimum requirements only. The equipment, when installed and operating, shall meet or exceed the specified minimum performance requirements in paragraph 1.01.E.

B. Design belt filter presses for continuous operation.

C. The belt filter presses shall be of the continuous belt design with three dewatering zones including a gravity drainage section, followed by a wedge zone and an increasing pressure, drum and roller zone to yield the cake dryness required. The machine shall be of the type, which entrains the sludge between two continuous open meshed belts with a system of perforated and solid rollers. A belt tension system shall act on these rollers exclusively to provide increasing pressure as the sludge advances toward the discharge of the machine. A third and separate belt will be allowed for the gravity section if required per the standard configuration. Belt filter press shall be complete with all necessary motors, gear drives, hydraulic ~~or pneumatic~~ system, control panel, alarm system, ~~washwater booster pump,~~ belts and belt wash system, and appurtenances required for a complete and operable system. Dewatered sludge shall then be removed from the belts with scrapers (doctor blades) and the belts shall then be washed prior to receiving additional sludge.

D. Machine shall be completely factory assembled and tested, unless otherwise specified herein. The main frame assembly shall require only bolting to the floor and connection of external piping and electrical wiring. Flocculation devices, belts, pre-dewatering drums, and other equipment which might be damaged during shipping if mounted on the main frame shall be installed following shipment by a representative of the manufacturer. All electrical components located on the machine shall be pre-wired at the factory except connections between the machine and the control panel which will be completed in the field..

E. Machine shall be designed and constructed in such a manner so as to be suitable for continuous heavy-duty use in a humid and corrosive atmospheric environment.

F. Routine maintenance shall be possible without taking the machine out of service. Belts shall be replaceable without requiring disassembly of the belt filter presses.

G. All parts requiring routine maintenance shall be readily accessible from the outside of the machine. Side panels, where furnished, shall be easily removable for access to the machine's components and shall be securely attached to the frame when in place.

2.02 EQUIPMENT LAYOUT

A. The Manufacturer is alerted to the fact that the sludge dewatering room layout is dictated by the existing space available. The existing belt filter press layout is depicted in the reference drawings contained in the Request for Proposals.

B. The belt filter press equipment shall not extend higher than 10 feet which allows nominally three feet of headroom with structural ceiling of existing building when mounted to the existing floor elevation. Similary, the required space for maintenance of the equipment on any side must be possible given the constraints of the existing room. See the reference drawings contained the Request for Proposals.

C. The belt filter press equipment shall discharge dewatered cake onto the existing horizontal belt conveyor. The existing conveyor belt runs at 2'-8" above the existing floor elevation with side guards that extend to 3'-7" above the floor. Cake shall be dropped onto conveyor at a maximum height of 1'-6" above belt. Proposed equipment shall be configured to operate with the existing conveyor configuration. Provide vertical box chute with flexible shields at conveyor/box interface to facilitate containment of sludge cake while allowing conveyor cake to transverse through the chute.

D. The Manufacturer shall identify, as part of the shop drawings for the belt filter presses, complete layout of any platforms, access bridges and other auxiliary equipment recommended for operation or maintenance of the equipment including visual inspection of the top of the gravity section.

2.03 MATERIALS

Component	Material
Frame	Steel, ASTM A36, hot-dip galvanized ASTM A123
Splash guard, Vertical Box Chute	ASTM A320, stainless steel, Type 316LT
Drum rollers	ASTM A320, stainless steel, Type 316L
Rollers	Steel tube, ASTM A-36, 1/2-inch minimum coated with ~~Buna-N, neoprene,~~ Rilsan nylon II ~~or Teflon~~ or ASTM A320 316 stainless steel
Roller shafts	ASTM A320, stainless steel, Type 316
Hydraulic piping	ASTM A320, stainless steel, Type 316
Pneumatic tubing	ASTM A320, stainless steel, Type 316
Plows and sludge distribution equipment	ASTM A320, Type 316, stainless steel, coated as specified
Belt filter cloth	Monofilament polyester
Belt seam closures (for seamed belts)	ASTM A320, Type 316, stainless steel
Spray headers	ASTM A320, Type 316, stainless steel
Spray nozzles	ASTM 320, Type 316, stainless steel
Drainage pans	ASTM A320, Type 347L, 316L, stainless steel
Internal pressure piping	ASTM A320, stainless steel, Type 316
Drains	Schedule 80 PVC or ASTM 320, Type 316
Anchor bolts and miscellaneous hardware, including the bolts, nuts and washers	ASTM A320, Type 316 stainless steel
Mixing drum and head box	ASTM A320, Type 316L stainless steel
Control panels	ASTM A320, stainless steel, Type 316L

A. Materials specified are considered the minimum acceptable for the purposes of durability, strength, and resistance to erosion and corrosion. The Manufacturer may propose alternative materials for the purpose of providing greater strength or to meet required stress limitations. However, alternative materials must provide at least the same qualities as those specified for the purpose.

2.04 CORROSION PROTECTION

A. The ferrous metal and related components shall be protected by hot dip galvanizing. Hot-dip galvanizing shall be in accordance with ASTM A123 after fabrication. No cutting, welding, drilling, or punching will be permitted on any portion of the frame after galvanizing.

B. All pre-painted purchased equipment such as electrical motors, gear boxes, hydraulic/pneumatic cylinders etc., are to be painted with a Manufacturer's standard coating finish suitable for severe duty applications.

C. Control panel enclosures shall be NEMA 4X constructed of type 316L stainless steel. The inside of the enclosure shall be white.

2.05 EQUIPMENT

A. Frame:
1. The press frame shall be designed to accommodate all operating and static loads with a factor of safety of not less than 5 and shall function without deflection, deformation, or vibration which will in any manner degrade performance of the equipment. No disassembled component shall weigh more than 4,000 pounds.
2. ~~, and the f~~Frame design shall ~~incorporate skids for~~ evenly distribute~~ion of~~ all loads to the supporting building structural system. Frames can be multiple leg configuration for floor or pedestal installation or skids for floor installation.
3. Lifting lugs shall be provided, and access platforms shall be recommended to afford convenient access to maintenance points throughout the press.
4. Splash guards shall be provided to confine all liquid to within the confines of the exis~~i~~ting drain containment basin. Splash guards shall be designed to permit convenient access to all interior portions of the press for maintenance purposes.
5. In their principal load bearing direction, no unsupported frame spans greater than 84 inches will be permitted. The structural design of all framing members shall limit deflection to no more than 1/480 of span. Design maximum stresses shall not exceed 20 percent of the material's yield strength. Upon completion of all fabrication work, all components of the press' framing system shall be coated in accordance with the requirements of paragraph 2.04.
6. Frame shall have accurately machined and positioned seats for all bearings, arranged to ensure and maintain absolute alignment of all rotating elements under all loading conditions.
7. Manufacturer shall provide recommendation for anchor bolt system for cast-in-place installation using Type 316 stainless steel.

B. Drainage:
1. Drainage pans shall be provided under all dewatering and belt washing zones to contain all liquids and conduct this material to the drain sump to be incorporated into the machine's support base. The drainage pans, shields and piping shall be designed to confine all spray and splashed liquids and to conduct these to the sump. Drained connections shall be self-venting to prevent overflow. The main sludge inlet area shall include a high level overflow which shall discharge, through appropriate piping to the sump beneath the press. A NEMA 4X float switch shall be provided in the drainage pan. The switch shall be set to close when the sludge receptor area is near overflow elevation.

2. The low point of any drainage pan shall be provided with a connection for drain piping. Drainage piping shall be Schedule 80 PVC and shall be routed from each pan and shall terminate within the confines of the filtrate sump.
3. The drainage pans shall extend a minimum of 3-inches beyond the belt width on both sides and shall have a minimum 1-inch depth at any given point. The drainage pans shall be constructed of a minimum 14-gauge Type 316L stainless steel.

C. Belt Wash System:
1. Both dewatering belts shall be provided with a washing system consisting of piping, nozzles, drip pans, and spray containment shields as required to clean the area in contact with the sludge prior to returning to the pressing zones. The stainless steel nozzles shall be designed with a self-cleaning mechanism to provide cleaning action without disassembly or interruption of operation. Spray piping and nozzles shall be adequately braced and shall be of sufficient pressure rating to withstand pressure transients caused by sudden valve closures. All spray water shall be contained within the press enclosure.

D. Sludge Conditioning:
1. The press shall be provided with a sludge conditioning system designed specifically for polymer aided flocculation of anaerobically digested sludges. The system shall be configured to prevent floc breakup during transport to the gravity drainage section. The sludge conditioning device shall provide an appropriate, infinitely variable range of conditioning energies to assure economic flocculation of the sludge under all conditions.
2. The sludge conditioning system shall be mounted upstream of the press and shall consist of an in line, non clog, variable orifice, venturi type mixer with a polymer injection ring. Static mixers with stationary baffles, modified check valves or mixers requiring electrical motors and controls, or tanks with mechanical mixers shall not be acceptable.
3. The sludge/polymer mixer assembly shall be Type 316L stainless steel with ANSI compatible flanges. The mixer assembly shall include an in-line polymer injection ring made of UHMW HDPE, flow splitting manifold, tubing and fittings between the injection ring and manifold. Each polymer injection ring shall inject polymer at a minimum of four points located 90 degrees apart around the circumference of the ring. The inside diameter of the ring shall not be less than 6-inches (diameter of the sludge feed piping).

E. Filtering Medium:
1. The filter belts shall be manufactured of a continuous weave of monofilament polyester wires. Filter belts may be of split type or continuous. Seams for split belts must be designed to fail before the belt, be repairable and facilitate replacement. The seam shall be designed to prevent interference with doctor blades or any other belt press equipment. Regardless of design, belts shall be suitable for convenient replacement by operating personnel.
2. Belt seam closures shall be of stainless steel. Each belt shall be heat set, and all belt edges shall be double reinforced with 1/2-inch plastic band. Belt edges that are heat sealed only will not be acceptable. Each belt shall be pre-stretched to limit elongation to less than three percent of the overall belt length. All belts, including separate high tension belts supplied as part of the machine, shall be capable of continuously withstanding a maximum tensile force of three times the maximum tension that the belt will be subjected to under normal operation.

F. Roller Assemblies:
1. Drum rollers, if provided, shall have one inch minimum diameter perforations spaced at not more than three inches. Scoop blades or similar devices shall be provided to extract filtrate from the center of the drum.
2. All rollers shall be designed for a maximum deflection of 0.05 inch at the center when under maximum loading. Maximum roller loading shall include roller mass forces and the tension forces resulting from the belt drive and belt tension. Belt tension shall be based

upon not less than 200 pounds per inch of belt width and drive tension shall be calculated on the basis of a belt speed of not less than 15 feet per minute.

3. Non perforated rollers shall be constructed of ASTM A 36/A 36M or ASTM A 500 carbon steel and coated as specified hereinafter, or from Type 316 stainless steel, each with a continuous through shaft or with stub shafts supported by double, separated end plates, all welded in place. Stub shafts welded directly to single end plates are not acceptable. All welding shall be performed by qualified and certified welding operators in accordance with applicable AWS Standards. Minimum roller wall thickness shall be 1/2-inch. Perforated rollers shall be constructed of Type 316 stainless steel. Drive rollers, regardless of the material of construction shall be coated with a vulcanized rubber type coating. Drive rollers shall be provided with drainage channels or other suitable means to assist in the removal of water and prevent slippage.
4. All rollers shall be supported with heavy-duty bearings in sealed, splashproof enclosures. Bearings shall be self aligning, roller or ball bearing type, in horizontally split cast-iron housings with triple labarinth seals. Alternately bearing shall be one piece machined bearing housing with a golted and gasketed steel end plate with a quadruple seal. Bearings shall be outboard mounted and field replaceable without affecting factory alignment or without major disassembly. Bearings shall have an AFBMA L-10 rating of 800,000 hours of operation based upon all forces and loads, including belt tension, roller mass and drive torque loads. Load calculations shall be based on both belts at a simultaneous belt tension of 50 pounds per lineal inch of belt and at a belt speed of 15 feet per minute.
5. Grease fittings shall be extended to the face of the press frame and shall be grouped in one location to facilitate maintenance operations. Bearings shall be regreaseable while the press is running.

G. Belt Tracking andTensioning Systems:
   1. General:
      a. The press shall be provided with both tracking and tensioning systems to insure reliable operation. The belt tracking and tensioning system shall incorporate either hydraulic ~~or pneumatic~~ belt adjustments. All hydraulic piping ~~or pneumatic~~ tubing shall be rigidly and firmly anchored to the structural frame of the press. All lines shall be sized according to the intended use and operating pressure with a factor of safety of not less than 10.
      b. Hydraulic systems shall include all pumps, reservoirs, piping, and controls for system operation. The hydraulic power pack, including pump, reservoir and pressure controls, shall be located in a position which does not impede access to the press.
      c. ~~Pneumatic systems shall include compressor, reservoir, drier, piping and controls necessary for system operation and providing the required air quality~~.
   2. Belt Tracking System:
      ~~d.~~a. Automatic sensing devices shall be provided to actuate the automatic belt tracking system and assure proper alignment of the belts at all times. The sensing devices shall continuously monitor the position of the belt, allowing the alignment roller to effect minor belt position adjustments continuously to maintain the belt properly positioned within the belt track. The belt tracking system shall be designed so that all belt position adjustments are performed smoothly without sharp, sudden movements of the filter belt or alignment roller. The belt tracking system shall be designed to minimize belt and roller wear and extend the working life of the filter belts.
      ~~e.~~b. NEMA 4X limit switches shall be provided to detect malfunctioning of the tracking system. The switches shall be designed to detect gross belt misalignment and shall open to indicate belt misalignment, initiate a shutdown signal, and activate a remote alarm.
   3. Belt Tensioning Assembly:
      ~~f.~~a. A hydraulically or pneumatically adjusted belt tensioning assembly shall be provided. Belt tension adjustment shall be through cylinder actuators for hydraulic systems or bellows actuators for pneumatic systems acting on the takeup roller hubs. Bellows

type actuators shall be self aligning type, designed for a working pressure of 150 psig. Tension adjustment devices acting on the center of the roller will not be permitted. Means shall be provided to maintain roller alignment and provide even tension throughout the width of the belt. Belt tension shall be variable and tension adjustment shall be possible while the machine is in operation. Either system shall maintain a constant tension on the belt regardless of cake thickness. A pressure gage or similar device shall be provided to indicate actual belt tension, and normal operating limits shall be indicated on the face of the gage. The belt tensioning system shall be designed to ensure simultaneous and parallel movement of the tensioning roller ends during adjustment and to accommodate at least 3 percent increase in belt length. Belt tension shall be infinitely variable and shall be adjustable without shutdown of the machine.

~~Pneumatic System:~~

~~g. Provide the main control air inlet to each press with a combination filter regulator lubricator with input and output gages, and a suitable pressure switch with D.P.D.T. contacts rated 10 amperes at 120 volts in a NEMA 4X enclosure to activate an alarm on low control air pressure.~~

~~h. Furnish one air compressor assembly to provide an air supply to the belt filter press sludge dewatering machines.~~

~~1) Air compressor assembly shall consist of two motor driven air compressors (one is standby), inlet filter silencer, intercooler with drain, aftercooler with automatic condensate trap, air receiver with gage, safety valve, and automatic condensate trap, control system, and all interconnecting piping and wiring. All equipment shall be assembled on a rigid steel frame or base or on support legs, ready for mounting on a concrete equipment pad foundation.~~

~~2) Compressors shall be two-stage, air-cooled, heavy-duty type, designed for continuous service. Compressor piston displacement and actual delivery shall be as required to operate the belt filter press tensioning systems and maintaining a pressure of 150 psi. Compressor motors shall be totally enclosed, fan cooled motor with Class F insulation, suitable for operation on 460 volt, 3 phase, 60 Hz power. Space heaters, 120 volt single phase, shall be placed in each motor frame.~~

~~3) Power shall be transmitted from the motor to the compressor by a V belt drive, consisting of compressor and motor sheaves, belts, and drive guard. Means shall be provided to adjust belt tension. Provide a starting unloader.~~

~~4) Provide a suitable dry type filter silencer on the compressor suction.~~

~~5) Furnish an air cooled intercooler to remove the heat of compression between stages. Furnish with a drain for the removal of condensate.~~

~~6) Provide an aftercooler. The aftercooler shall be of the air cooled type capable of cooling the compressed air to within 20 degrees of the ambient air temperature and furnished with an automatic condensate trap.~~

~~7) Assembly shall include one horizontal air receiver of ASME Code construction with a capacity determined by the belt filter press supplier. Receiver shall be complete with pressure gage, safety valve, outlet connections, drain connection, automatic condensate trap, and inspection openings.~~

~~8) Compressor Controls:~~

~~9) Provide fully automatic controls to maintain air receiver pressure within preset limits. Use a single dual setpoint pressure switch with an adjustable setpoint range between 75 and 150 psi to accomplish this control. Control setpoints for the switch shall be 100 psi at the low limit and 115 psi at the high limit. A second low pressure switch shall be set at 95 psi to activate an alarm output signal.~~

~~10) Pressure switches shall consist of a diaphragm piston pressure transducer and a precision switch. Piston backed by a cylinder disc to permit 10 times over-range pressure without affecting calibration. Range spring and piston shall be isolated from process fluids by the diaphragm. Switch provided with~~

~~two 3/4-inch conduit connections. Switch assembly housing shall be cast aluminum rated types 3, 4, and 7D per NEMA ICS6. Select pressure transducer so that set point falls between 30 and 70 percent of maximum range. Repeatability and sensitivity shall be 1.0 percent of operating range. Unless otherwise specified, switches nonadjustable deadband type.~~

~~11) Provide a level switch in the lube oil crankcase to activate a low level alarm output signal.~~

~~12) Local Controls:~~

~~Furnish a mushroom head emergency stop push button. The device shall have a separate manual reset.~~

~~13) Controls~~

~~Equipment described herein shall be contained within the belt filter press control panel.~~

~~Two combination circuit breaker/magnetic across the line motor starters with 120 volt control circuits for the compressor motors. Each starter shall have three thermal overload relays of the melting alloy type. Each starter shall be provided with a normally closed starter contact for control of the space heater furnished with the motor.~~

a) ~~Control logic shall be provided for OWNER to program within plant SCADA system.~~

4. Hydraulic System

~~i.~~a. Each hydraulic system (one for each press) shall include hydraulic pump and motor, reservoir with sight glass, filters, valves, gages, piping, and controls required for system operation. Provide a suitable pressure switch in a NEMA 4X enclosure to activate an alarm on low hydraulic fluid pressure. The hydraulic system shall be designed for location up to 25 feet remote from the belt filter press or may be incorporated in belt press framework.

~~j.~~b. The hydraulic pump motor shall be totally enclosed, fan cooled motor with Class F insulation, suitable for operation on 460 volt, 3 phase, 60 Hz power. Space heaters, 120 volt single phase, shall be placed in each motor frame.

~~k.~~c. Hydraulic system components shall be mounted on a rigid common baseplate suitable for floor or wall mounting if remotely located. Baseplate shall be stainless steel.

~~l.~~d. Controls

1) Equipment described herein shall be contained within the belt filter press control panel.
2) Two combination circuit breaker/magnetic across the line motor starters with 120 volt control circuits for the pump motors. Each starter shall have three thermal overload relays of the melting alloy type. Each starter shall be provided with a normally closed starter contact for control of the space heater furnished with the motor.
3) Control logic shall be provided for OWNER to program within plant SCADA system.

H. Gravity Dewatering Section:

1. The gravity dewatering zone shall accept flocculated sludge from the sludge conditioning system, and permit the free water contained within the conditioned sludge to readily separate from the sludge and drain to a collection pan.
2. The gravity drainage section shall be furnished with a sludge inlet assembly consisting of a distribution chute and leveling weir designed to evenly distribute the conditioned sludge across the entire effective width of the moving filter belt. The materials in contact with the sludge in the distribution area shall be Type 316L stainless steel with a minimum thickness of 14-gauge.
3. The conditioned sludge shall be contained on the belt with adjustable containment barriers equipped with replaceable rubber seals to prevent leakage. The containment barriers shall be constructed of minimum 14-gauge Type 316L stainless steel, and shall

be mounted on both sides of the belt and at the sludge feed end of the gravity section. The side skirts shall be equipped with urethane seals or other elasticized materials to prevent spillage of sludge. The replaceable rubber seals shall be attached to the containment barriers with a friction fit.

4. The gravity drainage section shall be furnished with chicanes (plows) to adequately furrow the conditioned sludge to promote drainage of water from the sludge. All surfaces of chicanes and other devices contacting the filter cloth shall be coated with teflon or similar smooth material to prevent rapid deterioration of the belt surface. Each row of chicanes shall be provided with a single lifting handle or automatic lifting system, designed to remove the entire row of chicanes at least 6- inches from the belt, out of the sludge flow, to facilitate cleaning. Chicanes shall be designed to be individually adjustable laterally and shall pivot to allow them to pass over obstructions on the belt. Each set of chicanes shall be mounted on a Type 316L stainless steel horizontal support bar.
5. The gravity dewatering belt shall be supported to minimize belt sagging by either a grid, or a plate designed to minimize belt wear and facilitate free drainage of filtrate. The support shall be a minimum 2-inches wider than the belt on each side. Wear strips, if used, shall be replaceable without removing or disassembling the gravity section sidewalls and chicane assemblies.

I. Wedge Compression Section:
   1. Following the gravity drainage section, the sludge shall enter a low pressure section where converging belts shall exert continuously increasing pressure. Means shall be provided to adjust the angle of convergence while the press is in operation to permit operators to optimize dewatering operations. Containment seals shall be provided on both sides of the wedge compression section to prevent sludge from escaping. The wedge compression section shall be configured to permit liquid to escape through both belts.

J. Roll Pressurization Section:
   1. Following the wedge compression section, the sludge shall enter a dewatering section of increasingly greater pressure, where the two belts pass sequentially over series of rollers of decreasing diameter. The roller diameters and belt tensioning system, in combination, shall exert increasingly greater pressure as liquid is removed from the sludge, thereby effecting efficient dewatering, yet assuring efficient capture of solids.

K. Scraper Blades and Discharge Chute:
   1. Replaceable scraper blades shall be provided to efficiently separate dewatered cake from the belt. A discharge chute shall be provided to conduct the cake to the middle of the belt conveyor for removal. The scraper blade shall be mounted opposite a belt roller to insure efficient cake removal. The pressure exerted by the scraper blade against the belt shall be adjustable while the press is in operation. Adjustable weights on lever arms will not be an acceptable means of providing this feature. Operation of the doctor blades shall be in such a manner as to minimize wear to the belt seam.
   2. Doctor blades shall have springs or counterweights to maintain pressure against the belts, constructed of rubber, plastic or fiberglass reinforced plastic, readily removable and positioned on each belt at the discharge end of the machine to effectively remove sludge cake from the belts. All springs and hardware shall be of stainless steel. A lifting device shall permit movement of the blades away from the belts for cleaning, all without machine shutdown. Alternately, hydraulic system system can be used to operate and lift the doctor blades.

L. Electrical:
   1. Control panel shall accept a 460 volt, 60 hz, 3-phase ac power input. A main disconnect circuit breaker and operator mechanism shall be included. When the disconnect is in the open positon all power shall be removed from the control system.

2. All conduit shall be Schedule 40 PVC, standard weight galvanized conduit with PVC coating, or standard weight conduit coated and lined with fusion applied epoxy in accordance with paragraph 2.04. Limit switches, float switches, and all other electrical devices shall be NEMA 4X enclosures with contact rated not less than NEMA A300. Conduit shall be routed to be protected by belt press frame where possible.
3. All switches and other 120 volt devices shall be wired in conduit to a labeled, gasketed, NEMA 4X junction box located on the press frame. The junction box shall include terminal blocks for interface of all factory-wired devices with the instrumentation and controls specified in herein.
4. A mushroom head emergency stop push button station or emergency lanyard shall be provided on each side of the machine. The device shall have a separate manual reset.
5. Each belt filter press unit shall be provided with a nylon "pull cord" on both sides in ring supports to provide emergency shutdown of all belt filter press motors and appurtenant equipment. Trip switch contacts shall be D.P.D.T. rated 10 amperes at 120 volts.

M. Drive Unit:
1. The belts and rollers shall be driven by a variable frequency drive unit to achieve infinitely and uniformly variable speed adjustment while the press is in operation through manual adjustment of a control device located on the control panel. The variable frequency device, complete with 1:1 isolation transformer, shall be provided separately by the belt press manufacturer for installation in the motor control lineup specified.
2. Drive motors shall be rated for inverter duty, variable frequency service designed for the bilt drive purpose and rated as premium efficient motors. Motors shall have totally enclosed fan cooled (TEFC) enclosure. Motors shall be rated at 150% nameplate horsepower of the required horsepower maximum service condition. Provide motor speed indicator readout for in the main press control panel for all drives. Variable frequency drives for shall be furnished within the press control panel.
3. All portions of the drive unit shall be totally enclosed with all gearing running in oil or grease lubricated and all drive chains and sprockets completely enclosed in a permanently greased housing.
4. Speed Reducer: The speed reducers shall be AC motor driven, helical shaft mounted gear reducers, with a 1.15 service factor. Worm gear reducers shall not be acceptable. The speed reducer housing shall be cast iron or fabricated steel welded construction and shall be totally enclosed, dustproof, and oil tight. Speed reducers shall be rated for minimum AGMA Class II service.
5. Drive Controller: The drive motors shall be controlled by a single variable frequency drive. The variable frequency drive controller shall provide 0 – 460 VAC, 2 – 60 Hz output capable of driving the belt at from 3 to 15 feet per minute.

~~N. Washwater Booster Pump~~
- ~~If belt filter press washwater system requires higher pressure than that specified in paragraph 1.01.F the belt filter press manufacturer shall provide a pump for each press capable of boosting the pressure to the required level.~~
- ~~Pumps shall be installed remotely in relation to the belt filter press. Pump shall not be incorporated into the belt filter press frame.~~
- ~~Pumps shall be horizontal, end suction, frame mounted, centrifugal pumps. Frame mounted shall mean foot mounted volute.~~
- ~~Pump shall provide the required flow and pressure while operating in accordance with the Test Standards of the Hydraulic Institute.~~
- ~~The pump shall be designed to operate without cavitation and the motor and pump combination shall operate without vibration over the specified range of conditions. The pump head capacity curve shall slope in one continuous curve with no point of reverse slope inflection.~~

- ~~All components shall be designed to safely withstand forces resulting from flow reversals up to 125 percent of maximum speed within the pump during shutdowns caused by power failure.~~
- ~~The complete pumping unit shall be designed to operate without overload on any component at any point along the pump's entire operating curve.~~
- ~~Pump construction shall be per the following:~~
  - ~~a. Casing - ASTM A48, Class 30~~
  - ~~b. Impeller – Cast bronze, ASTM B584~~
  - ~~c. Wearing Rings – Cast bronze, ASTM B584~~
  - ~~d. Shaft - Stainless steel: ASTM A276, Type 304 or 316; ASTM A582, Type 303 or 416~~
- ~~Casing shall be cast iron construction, threaded or flanged through bolt pipe connection, vertically split case design, with replaceable bronze case wear rings, tapped gage openings on suction and discharge nozzles on flanged connection, and watertight mechanical seals. Venting petcock shall be provided at high point of volute. Casing shall be foot mounted. Pump mounting via foot support of the bearing frame only in lieu of the casing foot is not acceptable.~~
- ~~Impeller shall be bronze, enclosed, single suction type, static and dynamically balanced, and trimmed to meet specified conditions. Impeller shall be less than 85 percent of largest cutwater diameter accommodated in volute.~~
- ~~Shaft shall be stressproof stainless steel, precision ground oversized to carry radial and axial thrust.~~
- ~~Bearings shall be grease lubricated and shall have a minimum ABMA L-10 rating life of 50,000 hours.~~
- ~~Couplings shall be flexible heavy-duty type suitable for start-stop operation and provided with OSHA approved removable stop guard.~~
- ~~Base shall be either heavy-duty cast iron construction reinforced against deflection, with integral drip rim, IPS drain connec¬tion and grout holes; or formed steel channel type without drip rim.~~
- ~~Single mechanical seals shall be split mechanical seals requiring no field assembly, other than assembly around the shaft and insertion into the pump. They shall be self-aligning, and self-centering, single seals. They shall be of a nondestructive (nonfretting) type requiring no wearing sleeve for the shaft. Metal parts shall be Type 316 or 316L stainless steel. Springs shall be Hastelloy C, Elgiloy, or other Duplex SS selected for resistance to chloride attack. Rotary faces shall be silicon carbide or chrome oxide. Stationary faces shall be silicon carbide for solids bearing fluid service and carbon for clean water service. Elastomers shall be ethylene propylene or fluorocarbon. Mechanical seals shall be suitable for operation between full vacuum (0 psia) up to 200 percent of the maximum specified operating pressure, but in any event not less than 200 psig.Pumps shall have volute connected flush water with cartridge filter for seal face cooling and circulation.~~

~~O.~~N. Controls

1. Belt filter press system will be controlled from the existing SCADA system. Belt filter press equipment manufacturer shall provide control description and I/O list that will be installed in the SCADA system by a third party. Control information submitted shall incorporate control of all systems provided by belt filter press supplier including, belt filter press, ~~washwater booster pump (if provided)~~, hydraulic system (if provided)~~ or pneumatic system (if provided~~). Belt filter press supplier shall also provide the control panels described herein.
2. A BFP Master (Main~~)~~ Control Panel for each belt filter presses shall be supplied with a stainless steel 33"x57" backpanel/subpanel that shall replace that within existing freestanding BFP Main Control Panels. These shall accept 460 VAC, 60 hertz, 3-phase power and contain the following~~.~~ Main control components:
   a. ~~shall consist of;~~ variable frequency drive controller with short-circuit and overload protection for main belt drive,
   b. motor starters with short-circuit and overload protection for hydraulic pump~~ and wash water booster pump if required~~.

~~a.~~c. Terminal landing strip shall be provided for control components and connection to existing SCADA system.

3. Each belt filter press shall be supplied with a local control panel rated for NEMA 4X and constructed of stainless steel that shall be frame or wall mounted. Panel will be located locally to the belt filter presses and shall contain selector switches required for maintenance which included extending and retracting the belt tensioning system and forward and reversing direction of belt movement, in addition to an emergency stop pushbutton.
4. The Main Control Panel shall be completely pre-wired and factory tested prior to shipment.

~~b.~~a. Motor Starters

Motor starters shall be full voltage, nonreversing, IEC style across the line units. Coils shall be 120 VAC. The starters shall be Allen Bradley style 140Mw/100 contactors.

~~c.~~b. Speed Controllers

The speed controllers shall be capable of outputting a 4-20mA DC or 0-10v DC setpoint control signal and accept a 4-20mA DC or 0-10v DC status signal. The controller shall be capable of PID control. The controller shall be Red Lion P48 or equal.

~~d.~~c. Pushbuttons

All pushbuttons shall be heavy duty, oil tight/watertight, corrosion resistant units rated for NEMA 4X service. Contact blocks shall be rated for 10-ampere continuous service. Pushbuttons shall be Allen Bradley, type 800 H or equal.

~~e.~~d. Pilot Lights

Pilot lights shall be heavy duty, oil tight/watertight, corrosion resistant units rated for NEMA 4X service. Units shall be 120 VAC transformer type. Pilot lights shall be Allen Bradley, type 800 H or equal.

~~f.~~e. Terminal Blocks

Terminal blocks shall be high density, spring cage clamp style, with 600 volt rating. Terminal blocks shall be Wago, Class 280, or equal.

~~g.~~f. Variable Frequency Drive

The VFD shall be UL listed and shall be Allen Bradley Powerflex 400 style, and provide for Ethernet communications.

2.06 SPARE PARTS

A. One set of any tools required for servicing belt filter presses shall be provided. In addition, the following spare parts shall be provided:
   1. Two complete sets, replacement belts (The belts shall not be provided until a period of time after start up, to allow evaluation of performance of the installed belts.)
   2. Two complete sets of doctor blades including all fasteners, brackets and appurtenances necessary for mounting on the press frame
   3. Cams, if used, for doctor blades
   4. Gravity, wedge and shower box seals
   5. One complete set, water spray nozzles
   6. One bearing of each size and type used on each machine and subassembly
   7. One complete set, all belt positioning and tensioning devices

B. Spare parts shall be protected, labeled, and boxed. Special tools shall be Proto, or equal, with the name of the Owner engraved on each. Tools shall be furnished in a painted metal mechanic's toolbox fitted with a lock hasp. The words "Belt Filter Press Tools" and the name of the Owner shall be neatly stenciled on the cover.

C. Manufacturer shall furnish a list of additional recommended spare parts for an operating period of one year. This list shall describe each part, the quantity recommended, and the unit price of the part.

D. Furnish oil and grease required for initial operation. Products shall be as recommended by the manufacturer.

PART 3 EXECUTION

3.01 GENERAL

A. Belt filter presses shall be completely factory assembled. Erection shall require only bolting to the foundation and connection of external piping and wiring.

3.02 FIELD TESTING AND NONCOMPLIANCE PENALTIES

A. Functional test:
   1. Perform functional testing for each belt filter press installed.
   2. Prior to system start-up, system components shall be inspected for proper alignment, proper connection, and satisfactory operation.
   3. Manufacturer's representative shall inspect installation, check for lubrication and minor adjustments, provide certification that system components have been installed correctly and are ready for operation. Notify Buyer and Engineer prior to demonstrating machine operability.
   4. Demonstrate machine is operable by successfully running for two consecutive 8 hour days without mechanical, electrical, or control-induced malfunction.

B. Initial Performance test:
   1. Performance test shall not begin until functional testing has been completed to Buyer's and Engineer's satisfaction.
   2. After start-up, manufacturer shall conduct a performance test using Buyer's sludge to determine actual system operating conditions and verify that unit meets minimum requirements specified herein.
   3. Prior to performance tests, manufacturer shall perform optimization testing as necessary to determine and recommend most effective type of polymer to produce specified performance.
   4. Buyer shall provide sludge feed, water, electrical power, and sludge cake disposal necessary to conduct performance tests. Polymers required shall be provided by Buyer at recommendation of manufacturer.
   5. Cost of laboratory testing necessary to confirm centrifuge performance for initial test shall be borne by Buyer.
   6. If, after a minimum of five 7-hour test runs, with 3 rounds of sampling per run in opinion of Buyer, system meets minimum performance requirements specified herein and the supply sludge was within the specified operating ranges of the same paragraph, Engineer will recommend, by letter, that the press met initial performance testing requirements and authorizes extended performance testing.
   7. If, in opinion of Engineer, performance test results do not meet requirements specified herein and the supply sludge was within the specified operating ranges of the same paragraph, Engineer will notify Buyer and Seller of failure of the initial performance testing.
   8. In case of nonacceptable performance, manufacturer shall then have 30 days in which to perform at its sole expense, supplemental testing, equipment adjustments, changes or additions and to perform retest of nonacceptable system.

C. Extended Performance Testing
   1. Extended Performance Testing shall not begin until initial performance test has been completed to Buyer's and Engineer's satisfaction.

2. Extended performance testing shall consist of a 60 day performance period where manufacturer-trained Buyer staff operate the centrifuge utilizing the coagulant and polymer combination utilized in the initial performance testing.
3. Buyer will make daily measurements of centrifuge performance – coagulant and polymer consumption, power use, influent solids characteristics, dewatered sludge cake solids concentration, solids capture, and average daily throughput. Results will periodically be communicated to the equipment manufacturer.
4. Buyer will also evaluate equipment operability and reliability during this performance period.
5. Equipment manufacturer has the right to provide a representative onsite during the testing period to observe the equipment performance and operator activities.
6. Extended performance testing results will be reviewed by the Buyer and Engineer to determine:
   a. Belft filter press has met the specified performance requirements
   b. Belt filter press has demonstrated its operability and reliability.

   Results will be shared with equipment manufacturer.
7. If the extended performance test results are acceptable, Engineer will recommend, by letter, official acceptance of belt filter press.
8. If, in opinion of Engineer, performance test results do not meet requirements specified herein, Engineer will notify Buyer and Seller of nonacceptable performance.
9. In case of nonacceptable performance, manufacturer shall then have 30 days in which to perform at its sole expense, supplemental testing, equipment adjustments, changes or additions including piping and chemical feed points, and to perform extended performance retest of nonacceptable system.

D. After retesting, should the equipment fail to meet the minimum specified performance requirements the equipment will be rejected. Seller shall replace the failed equipment with different model units appropriate for meeting specified performance at no additional cost to Buyer. As an alternative Seller may elect to remove their failed equipment, provide full refund of the cost of the equipment to the Buyer and pay a penalty in the amount of 25% to assist Buyer in obtaining and installing alternate equipment. Failure to achieve specified performance criteria upon retesting shall constitute the basis for the Owner to seize the performance bond specified under paragraph 1.02 Extended Limited Warranty.

3.03 OPERATIONAL INSTRUCTIONS AND TRAINING

A. Provide training per Section 01 43 33.

B. Upon completion of training, submit certification Form B provided at the end of this section.

3.04 SUPPLIER OR MANUFACTURER INSPECTION AND AFFIDAVIT:

A. Furnished one or more experienced Service Engineers experienced in installation, adjustment, and start up per Section 01 43 33.

B. Upon completed installation, acceptable performance testing, and completion of Owner's training, submit a signed affidavit certifying that the supplier or Manufacturer has observed and accepts that all stages of construction, installation, testing, and training have been adequately performed. The affidavit shall conform to the form and sytle of Form C provided at the end of this section.

C. Provision of the inspection, approval, and affidavit by the belt filter press supplier or Manufacturer shall in no way relieve the Manufacturer of any responsibilities or requirements of this contract, including system installation, testing, commissioning, and the guarantee specified in paragraph 1.02 Extended Limited Warranty.

END OF SECTION

1) L.Winchell
2) B. Wester
3) J. M. Brady
4) J Gavin

Form A. UNIT RESPONSIBILITY CERTIFICATION FORM

CITY OF IOWA CITY

CERTIFICATE OF UNIT RESPONSIBILITY

FOR SPECIFICATION SECTION 46 76 21

BELT FILTER PRESSES

The undersigned manufacturer of driven equipment ("manufacturer") accepts unit responsibility for all components of equipment furnished to the Project under specification Section_____ , and for related equipment manufactured under sections**_____, _____, and _____ .**

We have reviewed the requirements for this section, including but not limited to drivers, supports for driving and driven equipment and all other specified appurtenances to be furnished to the Project by manufacturer. And, we have further reviewed, and modified as necessary, the requirements for associated variable speed drives and motor control centers. We hereby certify that all specified components are compatible and comprise a functional unit suitable for the specified performance and design requirements whether or not the equipment was furnished by us. We will make no claim nor establish any condition that problems in operation for the product provided under this specification Section _____ are due to incompatibility of any components covered by this Certificate of Unit Responsibility. Nor will we condition or void any warranty for the performance of the product of this specification Section _____ due to incompatibility of any components covered under this Certificate of Unit Responsibility.

Our signature on this Certificate of Unit Responsibility does not obligate us to take responsibility for, nor to warrant the workmanship, quality, or performance of related equipment provided by others under specification sections _____, _____, and _____. Our obligation to warranty all equipment provided by us shall remain unaffected.

Notary Public	Name of Corporation
Commission expiration date	Address
Seal:	By:
	Duly Authorized Official
	Legal Title of Official
	Date

Form B. MANUFACTURER'S INSTRUCTION CERTIFICATION FORM

Contract No:	Specification Section:
Equipment name:	
Contractor:	
Manufacturer of equipment item:	

The undersigned manufacturer certifies that a service engineer has instructed the wastewater treatment plant operating personnel in the proper maintenance and operation of the equipment designated herein.

Operations Check List (check appropriate spaces)

Start-up procedure reviewed	
Shutdown procedure reviewed	
Normal operation procedure reviewed	
Others:	

Maintenance Check List (check appropriate spaces)

Described normal oil changes (frequency)	
Described special tools required	
Described normal items to be reviewed for wear	
Described preventive maintenance instructions	
Described greasing frequency	
Others:	

Manufacturer

Signature of Authorized Representative

Date

Signature of Contractor Representative Date

Signature of Authorized Representative Date

Form C. MANUFACTURER'S INSTALLATION CERTIFICATION FORM

Contract No:	Specification section:
Equipment name:	
Contractor:	
Manufacturer of equipment item:	

The undersigned manufacturer of the equipment item described above hereby certifies that he has checked the installation of the equipment and that the equipment, as specified in the project manual, has been provided in accordance with the manufacturer's recommendations, and that the trial operation of the equipment item has been satisfactory.

Comments:

Manufacturer	Contractor
Signature of Authorized Representative	Signature of Authorized Representative
Date	Date